INSTITUTO POLITÉCNICO DE BEJA

Escola Superior de Tecnologia e Gestão

Mestrado em Internet das Coisas

Lisímetro Inteligente com Monitorização da Cultura e Ambiente

Uma Aproximação IoT

Carlos Manuel dos Santos Almeida

2022

INSTITUTO POLITÉCNICO DE BEJA

Escola Superior de Tecnologia e Gestão

Mestrado em Internet das Coisas

Lisímetro Inteligente com Monitorização da Cultura e Ambiente

Uma Aproximação IoT

Elaborado por:

Carlos Manuel dos Santos Almeida

Orientado por:

Professor Doutor José Jasnau Caeiro, IPBeja

Professor Doutor João Carlos Martins, IPBeja

Dissertação de Mestrado
Escola Superior de Tecnologia e Gestão do Instituto Politécnico de Beja

2022

Agradecimentos

A realização desta dissertação de mestrado contou com diversos apoios e incentivos, sem os quais não seria possível a sua concretização.

Em primeiro lugar quero agradecer aos meus orientadores pela excelente orientação, incentivo, apoio e total disponibilidade para a realização deste trabalho.

Agradeço em particular ao Professor Doutor José Jasnau Caeiro, pelos seus ensinamentos e pelos desafios que me colocou, os quais me permitiram adquirir novas competências. Entre os diversos desafios, destaco o desafio de realizar um artigo científico para apresentar numa conferência de IoT.

Agradeço em particular ao Professor Doutor João Carlos Martins, a preciosa ajuda nas revisões da dissertação, assim como na realização do artigo científico, nomeadamente na sua tradução e revisão.

Agradeço também ao Dr. João Santos pelo seu contributo na realização do artigo científico.

Agradeço a todos os professores do curso de mestrado em Internet das Coisas, os conhecimentos que transmitiram ao longo do curso, esses conhecimentos foram fundamentais para conseguir concluir este trabalho.

Agradeço a todos os meus colegas do curso de mestrado a troca de conhecimentos nas diversas áreas, em particular àqueles com quem fiz trabalhos de grupo.

Agradeço ao IP Beja por ter um curso de mestrado em Internet das Coisas em regime Pós-laboral e *blended-learning*, só deste modo foi possível o acompanhamento das aulas, e a concretização deste trabalho.

Para finalizar quero agradecer à minha esposa Rita Pereira e ao meu filho Tiago Almeida, o apoio, e a compreensão no decorrer deste trabalho.

Resumo

Lisímetro Inteligente com Monitorização da Cultura e Ambiente

Uma Aproximação IoT

Adotando uma abordagem IoT apresentamos um modelo de lisímetro inteligente, melhorado com análise de pragas e o estado da cultura. Além da obtenção do balanço tradicional de evaporação-transpiração, o lisímetro mede parâmetros adicionais tais como a temperatura e humidade do solo, a diferentes profundidades; temperatura e humidade do ar; exposição à luz solar (visível e infravermelho). Além disso, o sistema faz a captura imagens de alta resolução da cultura alvo. Estas imagens são processadas localmente, para redução de dados que são armazenados posteriormente numa plataforma remota. O objetivo principal é a monitorização e com vista ao aumento da produtividade global da cultura. Este lisímetro também fornece dados para um sistema global de monitorização de recursos hídricos que integra informações de várias fontes: outros lisímetros, estações meteorológicas, sistemas de monitorização da qualidade da água, *etc.*. O resultado deste trabalho culminou no desenvolvimento e teste de um protótipo funcional.

Palavras-chave: Lisímetros Inteligentes, Agricultura de Precisão, IdC, Gestão da Água, Evapotranspiração.

Abstract

Smart Lysimeter with Crop and Environment Monitoring

An IoT Approach

A model of a smart lysimeter, adopting an IoT approach, enhanced with pest and crop state analysis is presented. Besides the measurement of the traditional evaporation-transpiration balance, the lysimeter senses additional parameters like the soil temperature and humidity at different depths; air temperature and humidity; sunlight exposition (visible and infrared). Additionally, the system can capture high-resolution images of the target culture. These images are locally processed for data reduction and the main features are stored in a remote platform afterwards. The main goal is the monitoring and enhancement of the global crop yield. This lysimeter also provides data for a global water resources system that integrates information from several sources: lysimeters, weather stations, water quality monitoring systems, *etc.*. The result of this work culminated in the development and testing a functional prototype.

Keywords: Smart Lysimeter, Precision Agriculture, IoT, Water Management, Evapotranspiration.

Índice

Agradecimentos **i**

Resumo **iii**

Abstract **v**

Índice **vii**

Índice de Figuras **xi**

Índice de Tabelas **xiii**

Índice de Listagens **xv**

Abreviaturas e Siglas **xvii**

1 Introdução **1**
1.1 Enquadramento da Dissertação 1
1.2 Contributos da Dissertação 3
1.3 Estrutura do Documento 4

2 Estado da Arte **7**
2.1 Introdução 7
2.2 Lisímetros 8
2.3 Aquisição de Imagem 9
2.4 Análise de Colheitas 20
2.5 Conclusão 21

3 Arquitetura do Lisímetro **23**
3.1 Estrutura Geral do Lisímetro 23

3.1.1 Camada Física 24
3.1.2 Camada na Nuvem 26
3.1.3 Camada de Aplicação 28
3.2 Arquitetura do Hardware 28
3.3 Conclusão 29

4 Implementação Experimental 31
4.1 Introdução 31
4.2 Módulo Lisímetro 31
4.2.1 Escolha de componentes 32
4.2.2 Implementação do módulo do lisímetro 45
4.3 Módulo Câmara 51
4.3.1 Escolha de componentes de hardware 52
4.3.2 Implementação do módulo câmara 55
4.4 Módulo de Computação na Nuvem 58
4.5 Estrutura de Suporte 63
4.6 Aspetos Experimentais 64
4.6.1 Construção do protótipo 64
4.6.2 Gestão de energia 65
4.6.3 Visualização dos dados 66
4.7 Conclusão 68

5 Conclusões 69
5.1 Conclusões gerais 69
5.2 Desenvolvimento Futuro 70

Bibliografia 73

Apêndices 85

I Código desenvolvido 87
I.1 MCU Módulo lisímetro 87
I.2 SoC ESP8266 127
I.3 MCU do módulo da câmara 130
I.4 SBC RPi 137
I.5 Node-Red 141

II Esquemas elétricos / Desenhos PCB **143**
II.1 Esquema Elétrico do Módulo Lisímetro 144
II.2 Esquema Elétrico do Módulo Câmara 145
II.3 Parte frontal da PCB câmara (KiCad) 146
II.4 Parte traseira da PCB câmara (KiCad) 146

III Custo de implementação **147**

Anexos **151**

I *Datasheets* dos componentes **153**

Índice de Figuras

1.1 Diagrama da Evapotranspiração 2

2.1 Passos usados numa CNN 11
2.2 Passos usados no método convencional 12
2.3 Comparações de desempenho dos métodos ML avaliados 13
2.4 Comparações de desempenho de RF com diversos n.º de árvores 14
2.5 Tabela comparativa de métodos e classificadores 15
2.6 Exemplo do histograma da imagem - Planta saudável vs Planta doente 15
2.7 Pontos de intercepção com ORB 16
2.8 Modelo da arquitetura de uma DCNN 16
2.9 Arquitectura do sistema com ANN 18
2.10 Métodos usados no estudo 19

3.1 Estrutura física do lisímetro 24
3.2 Arquitetura do sistema de um lisímetro com aquisição de imagens 25
3.3 arquitetura do hardware do sistema 29

4.1 Diagrama de blocos do hardware do módulo lisímetro 33
4.2 Estrutura interna do MCU MSP430G2553 35
4.3 Módulo WLAN ESP-01 com SoC ESP8266 35
4.4 Módulo com sensor de temperatura e humidade ambiente SHT30 36
4.5 Módulo com Sensor de Luminosidade TSL2561 36
4.6 Sensor de temperatura DS18B20 á prova de água 37
4.7 Sensor Capacitivo para Medição da Humidade do Solo 38
4.8 Célula de carga de 50Kg com 1/2 ponte de *Wheatstone* 38
4.9 Esquema de ligação de 4 células de 1/2 ponte de *Wheatstone.* 39
4.10 Diagrama de blocos do CI HX711 39
4.11 Módulo com CI HX711 40
4.12 Célula de carga de 10Kg 40

4.13 Medição da Tensão da Bateria do Lisímetro 41
4.14 Servomotor HS-422 para abertura de válvula do vaso da água drenada 42
4.15 Painel solar de 5V 1W 42
4.16 Módulo Controlador de Carga de Bateria com TP4056 43
4.17 Bateria de iões de lítio INR18650-35E da *Samsung SDI* 43
4.18 Circuito do interruptor de potência com MOSFET 44
4.19 Circuito do conversor DC/DC para alimentar o MCU 45
4.20 Placa de desenvolvimento EXP430G2ET 46
4.21 Diagrama de funcionamento do Módulo Lisímetro. 47
4.22 Placa de programação de módulos ESP-01 48
4.23 Esquema Elétrico Completo do Módulo Lisímetro 50
4.24 Caixa do módulo lisímetro 51
4.25 Visão geral do lisímetro. 51
4.26 Diagrama de blocos do módulo câmara 52
4.27 Módulo câmara Raspberry Pi V2 53
4.28 SBC Raspberry Pi 3B+ 54
4.29 Módulo VMA402 - Conversor DC/DC 54
4.30 Imagem do exterior do módulo câmara 57
4.31 Imagem do interior do módulo câmara 58
4.32 Virtualização dos serviços na nuvem 58
4.33 Comparativo entre contentores *docker* e máquinas virtuais 59
4.34 Diagrama de funcionamento do protocolo MQTT 60
4.35 Diagrama de fluxo do Node-Red. 61
4.36 Painel de indicadores dos sensores do lisímetro. 62
4.37 Painel com gráficos das últimas 48h dos sensores do lisímetro. 63
4.38 Medidas da Estrutura do Lisímetro [mm]. 64
4.39 Cálculo da energia diária do módulo lisímetro. 65
4.40 Cálculo da energia diária do módulo câmara. 66
4.41 Dados dos sensores apresentados num *Smartphone*. 67
4.42 Direita: Exemplo de uma imagem capturada, Esquerda: Detalhe da imagem ampliada. 68

Índice de Tabelas

3.1 Acrónimos do hardware do sistema 28

4.1 Especificações/requisitos pretendidas para o protótipo. 32
4.2 Componentes de hardware do módulo lisímetro. 34
4.3 Código desenvolvido para o MCU MSP430G2553. 46
4.4 Código usado no SoC ESP8266. 48
4.5 Componentes de hardware do módulo câmara. 52
4.6 Código desenvolvido para o MCU do módulo da câmara. 55
4.7 Bibliotecas instaladas no SBC RPi 56

III.1 Cotação de material para o módulo lisímetro. 148
III.2 Cotação de material para o módulo câmara. 149

Índice de Listagens

I.1 Código do programa principal main.c (MCU Módulo lisímetro). 87
I.2 Código CDC.c (MCU Módulo lisímetro). 95
I.3 Código delay.h (MCU Módulo lisímetro). 97
I.4 Código ds18b20.c (MCU Módulo lisímetro). 98
I.5 Código ds18b20.h (MCU Módulo lisímetro). 102
I.6 Código hx711.h (MCU Módulo lisímetro). 103
I.7 Código servo.h (MCU Módulo lisímetro). 107
I.8 Código sht3x.h (MCU Módulo lisímetro). 108
I.9 Código TSL2561.h (MCU Módulo lisímetro). 110
I.10 Código swi2c_master.c (MCU Módulo lisímetro). 112
I.11 Código swi2c_master.h (MCU Módulo lisímetro). 122
I.12 Código do programa principal do ESP8266 (SoC ESP8266). 127
I.13 Código main.c MCU (Módulo câmara). 130
I.14 Código start.py SBC 137
I.15 Código camera.py SBC. 137
I.16 Código copyimage.py SBC. 138
I.17 Código mqtt.py SBC. 139
I.18 Código shutd.py SBC. 140
I.19 Código Data.js 141

Abreviaturas e Siglas

ADC	*Analog to Digital Converter*
AI	*Artificial Intelligence*
ANN	*Artificial Neural Network*
ARM	*Advanced RISC Machine*
CBB	*Cassava Bacterial Blight*
CBSD	*Cassava Brown Streak Disease*
CCV	*Color Coherence Vectors*
CCS	*Code Composer Studio*
CCV	*Color Coherence Vectors*
CGM	*Cassava green mite*
CMD	*Cassava Mosaic Disease*
CNC	*Computer Numerical Control*
CNN	*Convolutional Neural Network*
CoAP	*Constrained Application Protocol*
CPU	*Central Processing Unit*
CSI	*Camera Serial Interface*
DCNN	*Deep Convolutional Neural Network*
DL	*Deep Learning*
DT	*Decision Tree*
EDA	*Electronics Design Automation*
ERT	*Extremely Randomized Trees*
ET	Evapotranspiração

FCM	*Fuzzy C-means Clustering*
FNR	*False Negative Rate*
GCH	*Global Color Histogram*
GMM	*Gaussian Mixture Modelling*
GPIO	*General Purpose Input/Output*
GPRS	*General Packet Radio Services*
HOG	*Histograms of Oriented Gradients*
HSV	*Hue, Saturation, Value*
I2C	*Inter-Integrated Circuit*
IC	*Integrated Circuit*
IDE	*Integrated Development Environment*
IoT	*Internet of Things*
JSON	*JavaScript Object Notation*
KNN	*K-Nearest Neighbour*
LBP	*Local Binary Pattern*
LPM	*Low Power Mode*
MCU	*Microcontroller Unit*
MQTT	*Message Queuing Telemetry Transport*
NB	*Naive Bayes Algorithm*
MIA	*Make Intelligent Applications*
ML	*Machine Learning*
NoSQL	*Not only SQL*
NTP	*Network Time Protocol*
ORB	*Oriented FAST and Rotated BRIEF*
PCA	*Principal Component Analysis*
PCB	*Printed Circuit Board*
PWA	*Progressive Web App*
RF	*Random Forest*

RFID	*Radio Frequency Identification*
RGB	*Red Green Blue*
RMSP	*Root Mean Square Propagation*
RPi	Raspberry Pi
RSA	*Rivest-Shamir-Adleman*
SBC	*Singe Board Computer*
SFTP	*Secure File Transfer Protocol*
SGD	*Stochastic Gradient Descent*
SGLDM	*Spatial Gray Level Dependence Matrices*
SIFT	*Scale-Invariant Feature Transform*
SMS	*Short Message Service*
SO	Sistema Operativo
SoC	*System on Chip*
SSH	*Secure Shell*
SURF	*Speed-ed Up Robust Features*
SVC	*Support Vector Classifier*
SVM	emphSupport Vectors Machines
TPR	*True Positive Rate)*
UART	*Universal Asynchronous Receiver-Transmitter*
URL	*Uniform Resource Locator*
VM	*Virtual Machine*
WLAN	*Wireless Local Area Network*
WSN	*Wireless Sensor Network*
ZB	*ZigBee*

Capítulo 1

Introdução

O tema da dissertação é o projeto e o desenvolvimento de um lisímetro tendo por base o paradigma da Internet das Coisas (*Internet of Things* (IoT)).

O lisímetro é um instrumento muito utilizado na agricultura e tem como função base a medição da Evapotranspiração (ET) de uma cultura.

Os lisímetros medem a evapotranspiração (ET) do solo e das plantas. São usados na agricultura há alguns séculos e têm como objetivo principal quantificar a necessidade hídrica das plantas de forma a fornecer apenas a quantidade de água necessária ao seu crescimento saudável. Sendo a água fundamental para o desenvolvimento socioeconómico, para a produção de energia e alimentos, para a construção de ecossistemas saudáveis e para a sobrevivência da espécie humana. O seu uso criterioso é essencial para fazer frente às alterações climáticas, servindo como elo crucial entre a sociedade e o meio ambiente [1].

1.1 Enquadramento da Dissertação

A evapotranspiração é a medida da perda de água do solo por evaporação e a perda de água da planta por transpiração. Numa cultura, temos um equilíbrio hídrico entre a entrada e saída de água. Na entrada do sistema temos a água da chuva, da rega e devida à condensação. Na saída temos a água drenada, a água perdida por evaporação e transpiração. A Figura 1.1 apresenta o balanço dos ciclos de água numa cultura.

Usando uma abordagem IoT, é descrito a estrutura e o desenvolvimento de um lisímetro acrescentado de um conjunto de sensores que permitem medir outros parâmetros relevantes para a agricultura, para além da evapotranspiração. Os parâmetros adicionais medidos pelo lisímetro são: a temperatura e humidade do solo a diferentes profundidades; temperatura e humidade do ar; exposição à luz solar (visível e infravermelho). O sistema, permite também

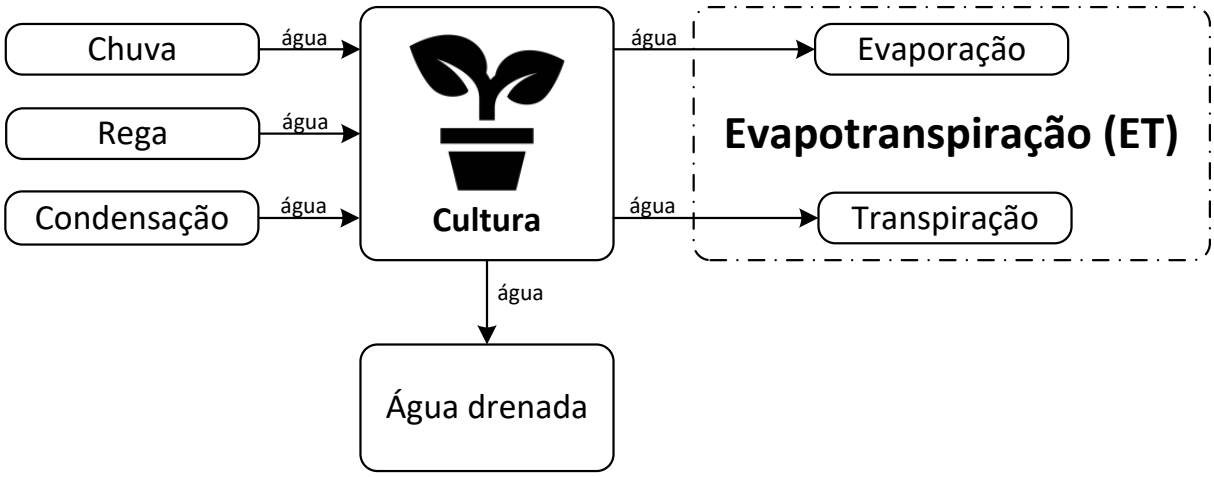

Figura 1.1: Diagrama da Evapotranspiração.

capturar imagens de alta resolução da cultura alvo. Essas são processadas localmente para redução da quantidade de dados, que são armazenados posteriormente numa plataforma remota.

O objetivo principal do lisímetro é a recolha de dados com vista ao aumento da produtividade global da cultura, e a poupança de água. Este lisímetro também fornece dados que são integrados num sistema global de gestão e monitorização de recursos hídricos, que integra informação proveniente de diversas fontes: outros lisímetros, estações meteorológicas, sistemas de monitorização da qualidade da água, sistemas de informação geográfica.

A Monitorização de Culturas com IoT

O sistema descrito recorre a sensores de imagem que, juntamente com microcomputadores (*Singe Board Computer* (SBC)), e sensores ambientais (temperatura, humidade e luminosidade) permitem monitorizar o desenvolvimento de culturas agrícolas e/ou eventualmente prevenir e detetar o surgimento de doenças e pragas. O processamento destes dados será feito na *Cloud* recorrendo a técnicas de *Machine Learnig* e *Deep Learning*. Prevê-se que após uma prévia aprendizagem dos modelos, seja possível detetar atempadamente problemas com a cultura de modo a gerar e enviar avisos necessários ao agricultor. Este sistema de monitorização de culturas têm uma componente de processamento digital de imagem e outra de aprendizagem automática.

1.2 Contributos da Dissertação

A dissertação apresenta como ponto principal a concepção dum sistema de monitorização de colheitas baseado numa arquitectura IoT. Este sistema foi desenvolvido a partir do trabalho de análise da documentação publicada recentemente sobre sistemas similares na sua natureza. Os contributos com este trabalho, são os seguintes:

1. Reunião e análise de informação sobre: a arquitectura dos sistemas; grandezas monitorizadas; sensores e demais componentes electrónicos, microcomputadores e microcontroladores.

2. Projeto e desenvolvimento de uma arquitetura que combina a obtenção do valor da ET, com a aquisição de dados adicionais da cultura e do ambiente, e ainda a avaliação do estado de saúde da cultura através da aquisição e processamento de imagem, tudo num sistema único. Esta abordagem tem vantagens relativamente a sistemas não integrados, nomeadamente:

   a) Maior eficiência energética;

   b) Menor custo económico;

   c) Processamento de dados centralizado;

   d) Correlação de dados dos diversos sensores de cada lisímetro;

   e) Correlação de dados entre os diversos lisímetros;

   f) A aprendizagem obtida através de técnicas de *Deep Learning* (DL) num determinado lisímetro é partilhada com os restantes. Todos os lisímetros contribuem com os seus dados para uma melhor precisão global do sistema.

3. Concepção de um protótipo experimental de elevada precisão recorrendo às mais recentes tecnologias IoT, e com custos controlados. A realização experimental, permite:

   a) Comprovar a eficácia da arquitetura desenvolvida;

   b) Detetar e corrigir falhas na arquitetura do sistema;

   c) Detetar e corrigir falhas na arquitetura de hardware;

   d) Avaliar a robustez do sistema;

   e) Obter dados reais para análise posterior;

   f) Quantificar o custo real de implementação do sistema.

4. Analise do desempenho do protótipo experimental implementado, a qual permitiu:

   a) Comprovar a precisão dos sensores usados nos lisímetros;

   b) Avaliar a performance da gestão de energia, nomeadamente a autonomia das baterias;

   c) Avaliar a facilidade de acesso à informação gerada pelo sistema, através das interfaces criados.

Do trabalho de investigação realizado resultou a publicação e apresentação do artigo científico: "*Smart Lysimeter with Crop and Environment Monitoring, Enhanced with Pest and Crop Control*", na *4th IFIP International Internet of Things (IoT) Conference*, em Novembro de 2021.

Algumas figuras possuem texto em inglês pelo facto de terem sido incluídas no artigo apresentado em conferência internacional [2].

1.3 Estrutura do Documento

A dissertação está organizada em cinco capítulos, incluindo o capítulo inicial de introdução e o capítulo final das conclusões.

Capítulo 1 - Introdução

Neste capítulo é feito o enquadramento da dissertação, descreve como é feita a monitorização de culturas recorrendo ao paradigma IoT, apresenta os principais contributos da dissertação e por último a estrutura do documento.

Capítulo 2 - Estudo da Arte

É feito o levantamento do estado da arte seguindo-se uma análise dos mais recentes trabalhos científicos sobre lisímetros, sistemas de aquisição de imagem para deteção de doenças e pragas em plantas e sistemas para análise de colheitas.

Capítulo 3 - Arquitetura do Sistema Lisímetro

Apresenta a arquitetura proposta para o lisímetro baseada em IoT, detalhando a estrutura geral do lisímetro nos seus diversos níveis e, por fim, a arquitetura de hardware do sistema.

Capítulo 4 - Implementação Experimental

Descreve a implementação experimental do lisímetro e apresenta as especificações requeridas para o protótipo. Depois é descrita a implementação física do protótipo experimental. Esta implementarão é dividida em 4 partes: Módulo Lisímetro, Módulo Câmara, Módulo de Computação na Nuvem, a estrutura de suporte e, por último, são apresentados os aspetos experimentais.

Capítulo 5 - Conclusões

Apresenta as conclusões do trabalho desenvolvido e propostas para trabalhos futuros.

Capítulo 2

Estado da Arte

2.1 Introdução

O capítulo incide sobre o levantamento de lisímetros inteligentes, sistemas de aquisição de imagens de plantações e sistemas de processamento de análise de colheitas.

Foram analisados diversos artigos publicados em revistas científicas em conferências, e outros documentos provenientes de locais da Internet. A pesquisa de artigos científicos foi dividida em três partes:

1. Pesquisa de artigos sobre lisímetros com abordagem IoT;
2. Pesquisa de artigos sobre sistemas de aquisição e processamento de imagem usados na agricultura;
3. Pesquisa de artigos sobre sistema de análise de colheitas.

Quando é necessária uma estimativa precisa da ET, deve-se usar um lisímetro de pesagem. Estes sistemas são usados para calibrar outros sistemas baseados em *Machine Learning* (ML) para estimar a ET.

Num período de 10 anos verifica-se que houve grandes avanços nas técnicas de processamento de imagem, nomeadamente a adoção de técnicas de DL *Deep Learning* do tipo *Convolutional Neural Network* (CNN) em vez dos métodos convencionais, nomeadamente de ML.

A evolução das redes neuronais, nomeadamente a *Deep Convolutional Neural Network* (DCNN) , nos últimos cinco anos está a permitir criar sistemas mais precisos e exatos, e com menor necessidade de ajustes. Prevemos que os métodos convencionais terão tendência a desaparecer com o tempo e com a inovação tecnológica.

2.2 Lisímetros

Existem vários tipos de lisímetros, tendo em conta o objetivo em concreto a que se destinam, dependendo essencialmente do clima, disponibilidade de materiais, tecnologia envolvida, dimensões e custos envolvidos na construção. Os lisímetros podem ser essencialmente divididos em duas grandes categorias: pesagem (mecânica, electrónica, hidráulica e de flutuação), e não pesagem (volumétricos: drenagem e lençol freático). Geralmente são classificados em quatro grupos: drenagem, pesagem, flutuante, e hidráulico [3].

Desde o primeiro lisímetro até há cerca de uma década atrás, os lisímetros eram na maioria dos casos, usados por instituições de ensino e investigação, devido ao seu elevado custo. No entanto, o aparecimento de novas tecnologias, assim como novos materiais, veio permitir a construção de lisímetros de pesagem de alta tecnologia e de baixo custo. A tecnologia IoT veio permitir uma melhor gestão das culturas devido à redução de custos e aumento da eficiência, assim como o seu controlo automatizado. A IoT permite o acesso à monitorização das culturas em tempo real e com os dados recolhidos é possível gerar alertas precoces e atempados, e fornecer informação de apoio à decisão ao agricultor [4].

Um lisímetro de pesagem é um dispositivo normalmente constituído por dois vasos, um para o solo com as plantas, outro para a recolha da água drenada. O cálculo da evapotranspiração é obtido pela relação entre a entrada de água (chuva, rega, e condensação) e a água drenada (Figura 1.1).

Em [5] a ET das plantas no deserto é quantificada usando sensores de humidade simples colocados a várias profundidades e sensores de pressão hídrica associados a um microcontrolador (*Microcontroller Unit* (MCU)) [6] para controlar a rega e para manter a humidade do solo num determinado nível. Este lisímetro não recorre à pesagem de água.

Para quantificar a ET de grandes campos em [7], o sistema descrito combina dados de sensorização remota, juntamente com dados meteorológicos e um lisímetro tradicional com sensores de peso, tornando possível estimar a ET de grandes áreas de cultura.

Em [8] é apresentado o cálculo de uma estimativa de ET inteligente. Os autores empregam uma rede neuronal difusa para estimar a ET de uma plantação em estufa a partir dos dados de temperatura, humidade e pressão atmosférica. Após o treino da rede neuronal e calibração do sistema com um lisímetro de pesagem local, a ET é estimada pela rede neuronal.

Quando é necessário uma estimativa precisa da ET, deve-se recorrer a um lisímetro de pesagem. Normalmente este é constituído por dois vasos: um contendo o solo com a plantação e um segundo vaso que recolhe a água drenada a partir do primeiro vaso. Ao medir e comparar o peso do vaso com o solo com o peso do vaso de drenagem, é feita uma

estimativa da ET com precisão. Os solos possuem taxas de infiltração de água variáveis consoante o seu tipo. No início, a taxa de infiltração é alta, mas à medida que o solo absorve a água, esta taxa torna-se estável, e o uso de um lisímetro de pesagem permite abordar ambas as situações com maior precisão. A utilização de vários sensores de humidade do solo a diferentes profundidades permite a caracterização do perfil do movimento da água em termos de profundidade [9]. No artigo [9], um balanço preciso da infiltração de água é apresentado recorrendo a um lisímetro de pesagem de precisão. Da literatura conclui-se que os lisímetros de pesagem apresentam uma melhor estimativa para a ET em termos de precisão, comparado com as técnicas alternativas.

2.3 Aquisição de Imagem

Um levantamento do estado-da-arte, muito amplo, relativamente à utilização do processamento de imagem na área da agricultura é apresentado em [10]. Onde não é abordado apenas uma área especifica, mas uma abordagem completa e detalhada das possibilidades do uso do processamento de imagem na agricultura, onde podemos destacar:

1. Deteção de plantas e frutos;
2. Apoio às colheitas, incluindo classificação de frutos, deteção de maturação, contagem de frutas e previsão de rendimento;
3. Proteção da saúde de plantas e frutos e deteção de doenças, incluindo ervas daninhas, insectos, deteção de deficiência;
4. Tipos de câmaras usadas no processamento de imagem na agricultura;
5. Sistema de orientação por visão por computador para veículos agrícolas;
6. Robôs agrícolas autónomos usando visão por computador.

No nosso estudo vamos apenas focar o ponto (3) Protecção da saúde de plantas e frutas e deteção de doenças, incluindo ervas daninhas, insectos, deteção de deficiência.

Deteção de ervas daninhas Na deteção de ervas daninhas foram referenciadas diversas abordagens, nomeadamente:

- *Speed-ed Up Robust Features* (SURF) [11] + *Gaussian Mixture Modelling* (GMM) [12];
- *Make Intelligent Applications* (MIA) [13];

- *Principal Component Analysis* (PCA) [14] + *Artificial Neural Network* (ANN) [15];
- emphSupport Vectors Machines (SVM) [16];
- DL com uma CNN.

Todos os métodos anteriores apresentam índices de precisão superiores a 60%, destacando-se a precisão da CNN nos campos de cenouras com índices de precisão superiores a 99%.

Deteção de insectos Na deteção de insetos foram referenciadas apenas duas culturas (uvas e morangos). Nas uvas foi possível detectar a *"Lobesia botrana"* e o bicho da videira com índices de precisão de 95.10% e 86.00% respectivamente. Nos morangos foi possível detectar uma praga de insetos com um erro quadrático médio de MSE=0,471.

Deteção de doenças e deficiências Na deteção de doenças e deficiências nas plantas foram referenciadas doze abordagens relativamente às culturas de café, trigo, soja, batata, citrinos, pepino, maça e estufas com verduras. Recorrendo a métodos de processamento de imagem mais recentes, o pior índice de precisão obtido (64.90%) é referente à deteção de deficiência de nutrientes nas folhas de café.

Conclui-se que a deteção de doenças e deficiências não é uma tarefa fácil, a precisão dos métodos é limitada, com valores inferiores a 90%. A maior dificuldade reside na necessidade de descriminar a zona doente da saudável, e onde, por vezes a sobreposição das folhas dificulta a tarefa.

A publicação [10] é um excelente guia para futuros trabalhos relacionados com processamento de imagem na agricultura, ele aborda todas a áreas possíveis de intervenção. Relativamente aos estudos referentes à utilização de métodos de ML e DL, são apresentadas tabelas com os resultados obtidos. Com base nos resultados é possível saber qual a melhor opção a tomar no caso da implementação de um sistema idêntico, e com os mesmos objetivos dos apresentados.

Na referência [17] é feito um levantamento das técnicas atualmente usadas na área de processamento de imagem, verificando quais são as técnicas mais adequadas a usar na deteção de doenças em folhas ou frutos de plantas, assim como o modelo usado para classificar doenças. O estudo tem como objectivo mostrar as várias etapas necessárias ao processamento da imagem, nomeadamente as vantagens e desvantagens de cada técnica usada, visando mostrar o actual estado da arte no campo do processamento de imagens para a deteção e classificação de doenças.

De acordo com este estudo, o processamento de imagens segue dois tipos de abordagens: primeiro usando uma rede neural convolucional CNN [18], e o segundo usando métodos convencionais.

CNN - ***Convolutional Neural Network***

Para classificar as doenças nas plantas são geralmente usadas duas abordagens diferentes:

- Aprendizagem a partir do zero (0);
- Transferência de aprendizagem.

A aprendizagem a partir do zero envia as imagens para uma série de camadas *"Convolution"* e de *"Pooling"* sucessivamente até à camada *"Full connected""*, esta última tem o resultado da classificação.

A transferência de aprendizagem usa o conjunto de dados obtidos da aprendizagem a partir do zero. O uso desta abordagem reduz o tempo de classificação e melhora o desempenho do sistema.

As principais vantagens reportadas de uma CNN, comparado com métodos convencionais, são:

- Aprende directamente com as imagens introduzidas;
- Não necessita fazer ajustes;
- O sistema pode ser usado para detectar várias doenças;
- Permite detectar doenças em diversas culturas.

A Figura 2.1 mostra os passos durante o processamento de uma imagem usando uma CNN.

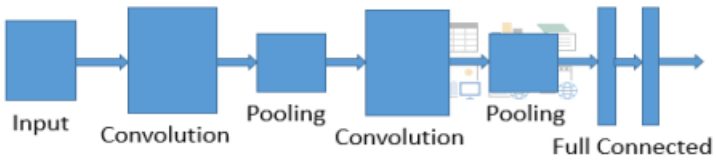

Figura 2.1: Passos usados numa CNN [17].

Devido às suas características esta abordagem é a mais usada pela maioria dos investigadores actualmente.

Métodos convencionais

O método convencional usa uma sequência de seis(6) passos para obter as características das imagens das plantas:

1. Aquisição de imagem
2. Processamento de imagem (Redução de ruído, Redimensionamento, Remoção de partes indesejada, Suavização, Ajuste do contraste e brilho);
3. Segmentação de imagem (Divisão da imagem em várias partes com as mesmas características: OTSU [19], K-means [20], conversão de *Red Green Blue* (RGB) [21] para HIV, e conversão de RGB para *Hue, Saturation, Value* (HSV) [22]);
4. Extracção de características (Cores, Formas, Contornos, Texturas, Técnicas: *Global Color Histogram* (GCH) [23], *Local Binary Pattern* (LBP) [24], *Color Coherence Vectors* (CCV) [25], *Spatial Gray Level Dependence Matrices* (SGLDM) [26])
5. Classificação (Análise de características - ANN, SVM, *Naive Bayes Algorithm* (NB) [27], *Decision Tree* (DT) [28], *Random Forest* (RF) [29]);
6. Teste (Teste com uma amostra, Verificação de precisão).

A Figura 2.2 apresenta os diversos passos usados nos métodos convencionais de processamento de imagem.

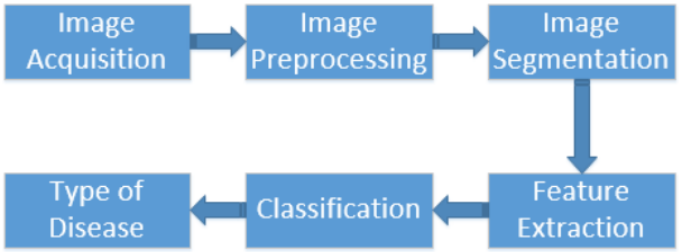

Figura 2.2: Passos usados no método convencional [17].

Conclui-se que a utilização de técnicas de processamento de imagem, para detectar e classificar doenças em frutos e folhas de plantas, são uma boa solução para os agricultores. É possível criar sistemas que fazem a deteção e classificação das doenças em tempo real e podem enviar mensagens de alerta aos agricultores, e desta forma evitar perdas de rendimento da colheita causadas pela propagação de doenças. O método convencional tem um bom desempenho para lidar com um determinado tipo de planta ou fruto, mas precisa de

muitos ajustes até obter uma boa precisão. Por outro lado a rede neuronal convolucional com uma aprendizagem a partir do zero, apresenta uma melhor classificação mas necessita de um maior numero de amostras, sobretudo quando há muitos dados.

Em [30] é usado o processamento de imagem para detectar automaticamente doenças nas plantações de milho. A partir da imagem original captada pela câmara, no formato RGB [21], foram convertidas noutros formatos, nomeadamente:

- *Scale-Invariant Feature Transform* (SIFT) [31];
- SURF;
- *Histograms of Oriented Gradients* (HOG) [32];
- *Oriented FAST and Rotated BRIEF* (ORB) [33].

Desta forma foi possível comparar o desempenho da combinação dos diversos formatos de imagem com diferentes métodos de ML, nomeadamente: SVM; DT; RF; e NB.

Concluíram que o formato RGB com o método SVM obtém o melhor desempenho (Figura 2.3), e que o método RF pode ser melhorado com um número de amostras maior (Figura 2.4).

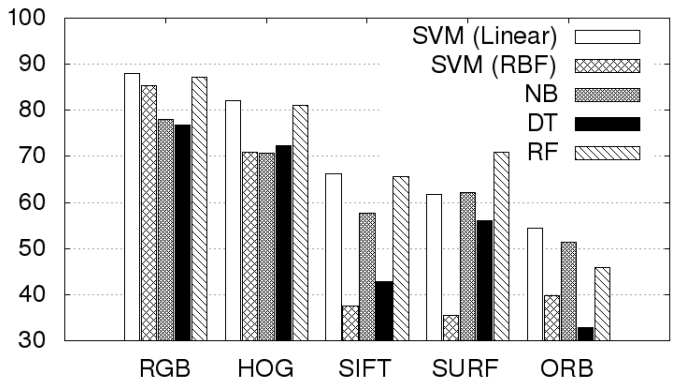

Figura 2.3: Comparações de desempenho dos métodos ML avaliados [30].

Em [34] é descrito um sistema para identificar plantas através do processamento de imagem das nervuras foliares. Á semelhança de [30], foi usado os mesmos métodos de ML. O sistema conseguiu reconhecer plantas com um a taxa de verdadeiros positivos (*True Positive Rate)* (TPR)) de 84,29% e uma taxa de falsos negativos (*False Negative Rate* (FNR)) de 15,71% [35]. É de referir a importância das condições de luz, assim como a distância da câmara à folha, para fazer uma boa aprendizagem.

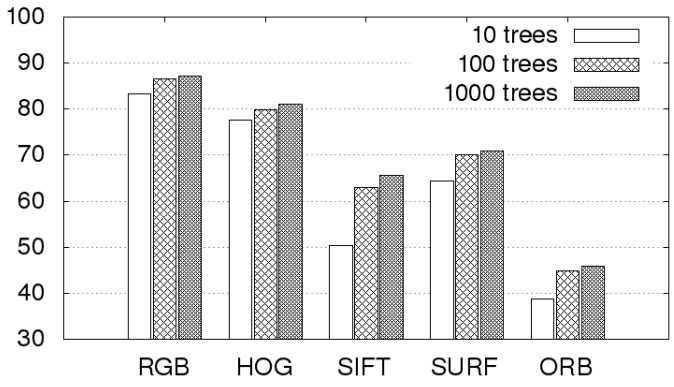

Figura 2.4: Comparações de desempenho de RF com diversos n.º de árvores [30].

Concluíram que para obter 70% de precisão, esta depende do pré-processamento da imagem, e por sua vez este pré-processamento depende do hardware e software utilizado.

Embora este sistema não se destine a detectar doenças, ao ser implementado num sistema que faça a deteção de doenças em plantas, permite verificar em tempo real se estamos a analisar a planta correcta e não alguma planta invasora que poderá surgir na plantação.

Em [36] é analisado um sistema para detectar doenças nas plantações de mandioca, porque o rendimento dessas culturas é muito afectado por quatro doenças bem conhecidas:

- *Cassava Mosaic Disease* (CMD);
- *Cassava Brown Streak Disease* (CBSD);
- *Cassava Bacterial Blight* (CBB);
- *Cassava green mite* (CGM).

Das quatro doenças a CMD e CBSD aquelas que mais degradam o rendimento dos agricultores na África Oriental e Central.

O aparecimento de doenças virais manifesta-se principalmente na deformação da cor e forma da folhas. Para extrair essas características da imagem foi usado os métodos HOG, SIFT, e SURF, tendo sido obtidos os melhores resultados com os métodos HOG e SIFT.

Para fazer a classificação das doenças foram usados os seguintes classificadores:

- Linear *Support Vector Classifier* (SVC) [37];
- *K-Nearest Neighbour* (KNN) [38];

- *Extremely Randomized Trees* (ERT) [39].

Os testes de desempenho, mostraram que a precisão com método ORB obteve a melhor precisão, superior a 99% (Figura 2.5).

	LinearSVC	ExtraTrees	k-NN
Color	80	48.94	44.68
ORB	99.98	99.88	100

Figura 2.5: Tabela comparativa de métodos e classificadores [36].

A Figura 2.6 apresenta a comparação dos histogramas das imagens de uma planta saudável e de uma planta doente. A Figura 2.7 mostra os pontos de intercepção através do método ORB.

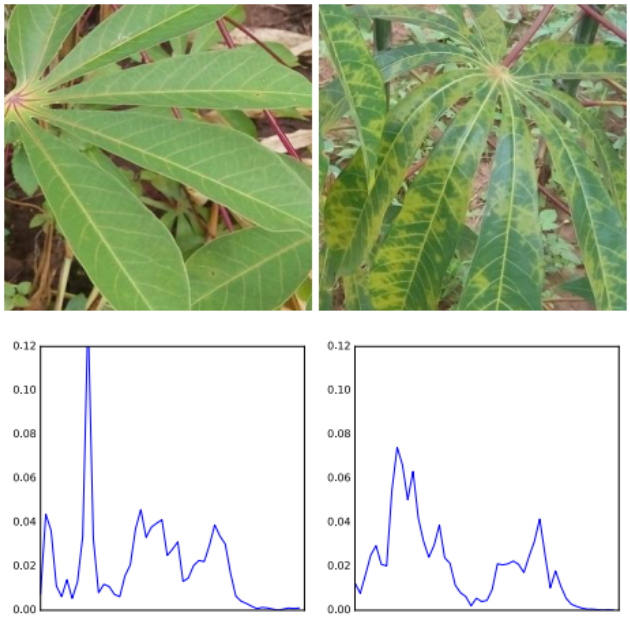

Figura 2.6: Exemplo do histograma da imagem - Planta saudável vs Planta doente[36].

O sistema apresentado foi desenvolvido para fazer um diagnóstico das doenças das plantações de mandioca baseado numa aplicação para *Smartphone*, de modo a que os agricultores possam fazer uma análise rápida das suas plantações em locais remotos. Contudo, este sistema pode ser implementado com um microcomputador do tipo Raspberry Pi[40] munido de uma câmara de 8 MPx, com processamento de imagem local.

Figura 2.7: Pontos de intercepção com ORB[36].

Em [41] foi usada uma rede neuronal convolucional profunda (DCNN) [42] baseada na arquitetura VGGnet16 [43] para detectar automaticamente doenças em folhas de plantas, os modelos foram testados num PC e num Raspbery Pi[40].

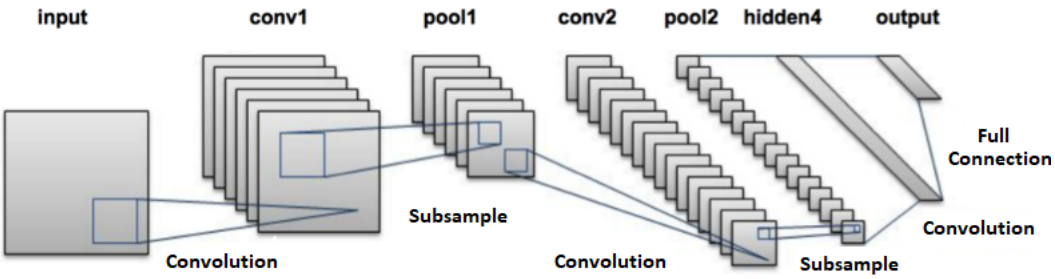

Figura 2.8: Modelo da arquitetura de uma DCNN [41].

Para obter o melhor desempenho de uma DCNN é fundamental usar um grande conjunto de dados. Este estudo recorreu a diferentes fontes de dados, nomeadamente, Internet, *dataset's* de acesso livre e imagens de telemóvel. Foram redimensionadas as resoluções das imagens para 100×100 pixel, de modo a reduzir o tempo de aprendizagem.

Foram usados os seguintes optimizadores:

- *Stochastic Gradient Descent* (SGD) [44];
- AdaGrad [45];
- *Root Mean Square Propagation* (RMSP) [46];

- Adadelta [47];

Os testes de validação no PC obtiveram uma precisão de 60% a 90%, com tempos de execução de 0,27s a 0,30s. No Raspberry Pi a precisão variou entre os 70% a 90% com tempos de execução 0,774s a 0,941s.

Deste modo conclui-se que o uso do modelo DCNN na agricultura é uma inovação que melhora o desempenho do sistemas, possibilitando uma melhoria na qualidade dos alimentos e, uma redução dos factores risco que afectam as colheitas. A parte mais critica do modelo DCNN é o processo de aprendizagem e o ajuste do optimizador.

Conclui-se que o modelo funciona bem nos diferentes hardwares, com precisões idênticas, apenas com tempos de execução diferentes, devido à capacidade computacional de cada um.

Em [48] é feito um estudo sobre a deteção e reconhecimento precoce da doença da ferrugem nas culturas de trigo. Para a deteção da doença foi usado o algoritmo *Fuzzy C-means Clustering* (FCM) [49], o reconhecimento foi feito com base numa rede neuronal artificial ANN [15], em 85% dos casos a identificação da doença foi bem sucedida.

O trigo pode ser infectado por 4 tipo de doenças consideradas ferrugem:

1. Oídio;
2. Mancha de fungos *Septoria* na folha;
3. Mancha bronzeada ou folha amarela;
4. Bolor de neve.

O processo de deteção de doença é feito em três fases:

1. Análise de imagens;
2. Extrator de características;
3. Classificador

Numa primeira fase é necessário fazer uma aprendizagem (*OFFLINE PHASE*). Com base num conjunto de imagens de folhas de trigo doentes e normais, através do **"Analisador de imagens"** algumas das características são obtidos pelo **"Extractor"**. Depois o **"Classificador"** é treinado, informando quais são as folhas normais e quais as doentes, assim como o nível de infecção.

Na segunda fase (*ONLINE PHASE*) pode-se identificar uma doença através das características obtidas pelo **"Extractor"** e testadas pelo **"Classificador"** se a folha é normal ou doente, de acordo com as informações guardadas na fase de aprendizagem.

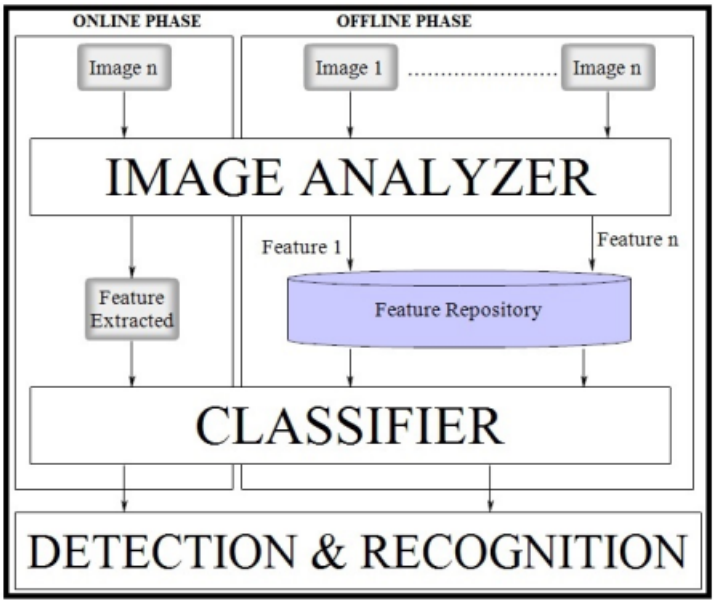

Figura 2.9: Arquitectura do sistema com ANN [48].

No estudo descrito foram recolhidas mais de 300 imagens de folhas de trigo numa plantação, depois as mesmas foram classificadas de acordo com o nível de infecção. De seguida foi treinada a rede neural artificial (ANN) com 20 imagens, quatro livres de doenças, as restantes com doença com diferentes níveis de infecção. Depois da fase de treino concluída, foram introduzidas 342 imagens na entrada da rede das quais 290 foram reconhecidas, tendo uma precisão de 84.8%.

Concluiu-se que o objectivo proposto de criar um sistema capaz de identificar as doenças nas folhas de trigo foi conseguido.

Assim, podemos concluir que, à semelhança das CNN, as ANN também produzem resultados bastantes bons na deteção de doenças em plantas, como é o exemplo do trigo.

Em [50] é proposto um sistema para identificar plantas através do processamento de imagem, designado por "WTPlant- (*What's That Plant?*), contudo recorreu ao DL pelo facto de ter demonstrado ter excelentes resultados com processamento de imagem naturais. Através de uma rede neural convolucional (CNN) é feito a aprendizagem por intermédio do método *MIT Scene Parsing*. Os primeiros resultados experimentais permitiram detetar a presença de plantas em 99.3% das imagens (17000 imagens naturais). Depois de um

processo de segmentação e aprendizagem das CNNs foi obtido uma precisão de 61.87% com a presença de plantas e flores misturadas.

Em [51] é proposto um sistema muito idêntico ao descrito em [50], baseado em ML. No entanto, faz a aprendizagem da sua rede neuronal com quatro *dataset's* diferentes:

1. Folio [52];
2. Swedish [53];
3. Flavia [54];
4. Leaf12 (tempo real).

A aprendizagem foi realizada recorrendo ao método convencional de DL, usando o conjunto de dados referidos.

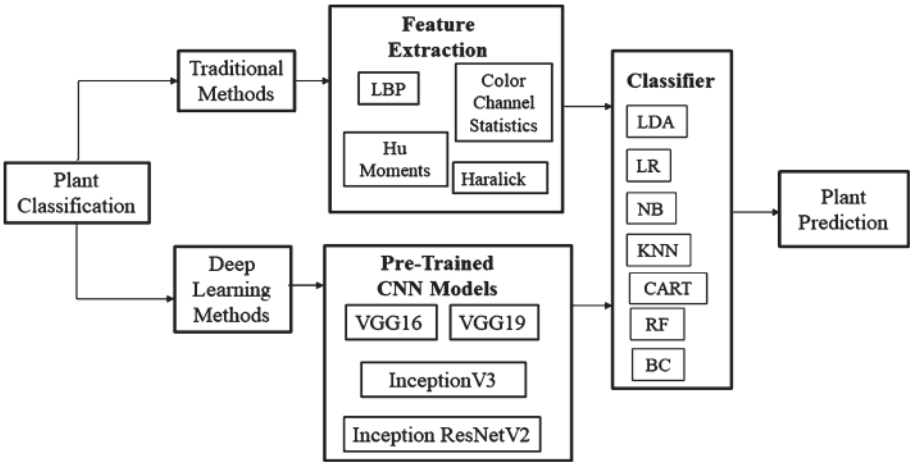

Figura 2.10: Métodos usados no estudo de [51].

Para o método convencional, a implementação foi feita em linguagem Python [1] com ajuda do pacote OpenCV [2]. A rede neuronal artificial foi implementada com ajuda da biblioteca Keras [3] juntamente com o pacote Theano [4] no *Backend*.

Tendo-se concluido que relativamente aos dois métodos utilizados, a partir dos testes experimentais, o método DL tem uma precisão mais alta em comparação com os métodos

[1]Python - Linguagem de programação de alto nível [55]
[2]OpenCV - Pacote de livrarias para processamento de imagem *Open Source* [56]
[3]Keras - Biblioteca *Deep Learning* para Python [57]
[4]Theano - Biblioteca Python para operações matemáticas multi-dimensionais [58]

convencionais em todos os conjuntos de dados. Em todos os casos, as previsões podem ser melhoradas através dos aumento da quantidade e representatividade dos dados.

Embora o sistema não se destine a detectar nenhuma doença, à semelhança do sistema implementado em [34], caso se trate de um sistema implementado com abordagem DL permite verificar em tempo real se estamos a analisar a planta correcta e não alguma planta invasora.

2.4 Análise de Colheitas

Um estudo muito completo sobre trabalhos já realizados relativamente à monitorização de culturas usando a IoT é apresentado em [59]. Além de uma introdução sobre a IoT, são analisados cerca de 38 artigos relacionados com o tema. Na maior parte dos trabalhos foram usadas redes de sensores sem fios *Wireless Sensor Network* (WSN) [60], nomeadamente com comunicações *ZigBee* (ZB) [61]. Estas redes de sensores sem fios permitiram monitorizar temperaturas, humidades do solo e do ar entre outros parâmetros, e controlar a rega das culturas. Noutros trabalhos foram usadas outras tecnologias, nomeadamente a *Radio Frequency Identification* (RFID) [62], o *General Packet Radio Services* (GPRS) [63], e o Wi-Fi [64].

É referenciado um artigo onde é usado uma câmara para deteção de pragas de insectos [65], embora a arquitectura seja explanada, não é dada informação sobre as técnicas de processamento de imagem usadas.

Em [66] é proposto um sistema com uma câmara de baixo custo, como alternativa na observação do crescimento das culturas. Usa-se uma câmara para avaliar os índices vegetativos (ev-NDVI [67], ev-SR, e ev-CIgreen) das culturas. O estudo conclui que ev-VARI funcionou melhor com o milho e o ev-CIgreen para a soja. O ev-VARI também foi o melhor para estimar a biomassa das folhas verdes no milho e o NBRINIR na soja. Os indicies vegetativos baseados em câmaras têm a possibilidade de estimar diversos parâmetros biofísicos, sendo uma boa opção para uma elevada frequência de observações e em muitos locais da plantação. Em todos os casos referenciados, a monitorização de culturas usando IoT mostra ser uma forma fácil e eficiente de aumentar a produtividade das culturas. Contudo, neste estudo não é mencionado como é feito o tratamento dos dados dos diversos sensores, nomeadamente se com a utilização de algoritmos do tipo ML - *Machine Learning* [68] e/ou DL - *Deep Learnig* [69].

2.5 Conclusão

A análise das publicações técnicas e científicas sobre o assunto, permite retirar algumas conclusões.

Quando necessitamos de uma estimativa precisa da ET, devemos usar um lisímetro de pesagem. Os sistemas que usam ML para estimar a ET recorrem a lisímetros de pesagem para a sua calibração.

O conjunção de dados proveniente dos sensores de lisímetros inteligentes com processamento de imagem da câmara numa única rede neuronal convolucional irá permitir mais precisão e fiabilidade na deteção e prevenção de doenças e pragas em plantas, assim como um melhor estudo das plantas.

Nos diversos estudos apresentados a precisão dos sistemas baseados no método de redes neuronais convolucionais CNN geralmente apresentam uma maior precisão.

A evolução das redes neuronais, nomeadamente a DCNN , nos últimos cinco anos permitem a criação de sistemas mais precisos, e com menor necessidade de ajustes. Assim, prevemos que os métodos convencionais terão tendência a desaparecer no futuro.

Alguns estudos permitem concluir que é possível desenvolver sistemas para deteção de doenças e pragas em plantas, recorrendo a hardware de baixo custo.

É muito difícil criar um sistema genérico para deteção de doenças em plantas independente do seu tipo. Para se obter bons níveis de precisão e rapidez devemos ajustar os sistemas para cada planta e doença especifica.

Capítulo 3

Arquitetura do Lisímetro

Para entender melhor a arquitetura proposta começamos por apresentar a estrutura física do lisímetro, que está ilustrada na Figura 3.1. O lisímetro é constituído por três recipientes, ou vasos, distintos. O vaso superior contém o solo com as plantas e é dotado de diversos sensores: temperatura e humidade do solo, em três profundidades distintas, assim como um conjunto de células de carga para medir o seu peso. O recipiente intermédio, que vai conter a água drenada do vaso superior, é dotado de uma célula de carga para quantificar o peso da água drenada, e uma válvula para drenar a água de em intervalos de tempo pré-definido para o vaso inferior após a avaliação do seu peso. O vaso inferior serve para reter a água drenada para eventuais análises químicas e físicas adicionais, como por exemplo para o estudo da percolação. A relação dos pesos dos vasos superior e intermédio permitem o cálculo da ET.

3.1 Estrutura Geral do Lisímetro

A arquitetura do lisímetro é projetada com recurso a tecnologias associadas à Internet das Coisas (IoT) atualmente disponíveis, nomeadamente: sensores de baixo custo, micro-controladores de baixo consumo de energia e comunicações sem fios. Um dos objetivos do projeto consiste em construir um sistema de baixo custo e elevado desempenho seguindo o paradigma IoT.

A Figura 3.2 apresenta um diagrama em camadas da arquitetura do sistema, composto por três partes:

- **Camada física** - responsável pela aquisição e processamento inicial dos dados provenientes dos sensores e posterior envio para a camada nuvem;

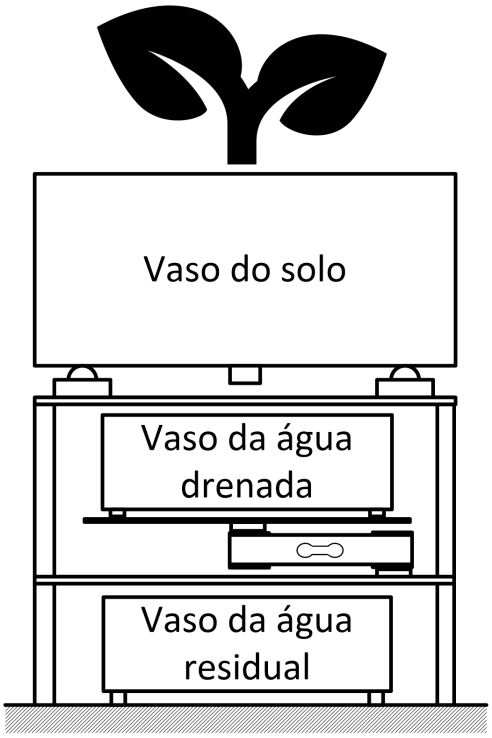

Figura 3.1: Estrutura física do lisímetro [2].

- **Camada nuvem** - responsável pela receção, o armazenamento e a análise dos dados, gerando avisos relacionados com a cultura e com o controle de pragas;
- **Camada aplicação** - disponibiliza as aplicações para os diferentes utilizadores de acordo com suas funções.

3.1.1 Camada Física

Na parte inferior da **camada física** estão os sensores que medem os parâmetros do solo e do ambiente, assim como a câmara que captura imagens da planta. No solo da cultura é medida a temperatura e a humidade em três profundidades diferentes tal como o peso do vaso. Toda a água drenada do solo da cultura que fica retida no segundo vaso é pesada, e depois é trespassada para um terceiro vaso através de uma válvula. A pesagem periódica do solo e da água drenada permitem o cálculo da ET. A temperatura, a humidade e a luminosidade ambiente são medidas para obter informação do meio onde está a cultura. Os sensores estão ligados a um MCU [6], de baixo consumo de energia, que recebe os dados, faz um pré-processamento dos mesmos, formatando-os para serem enviados para a **camada**

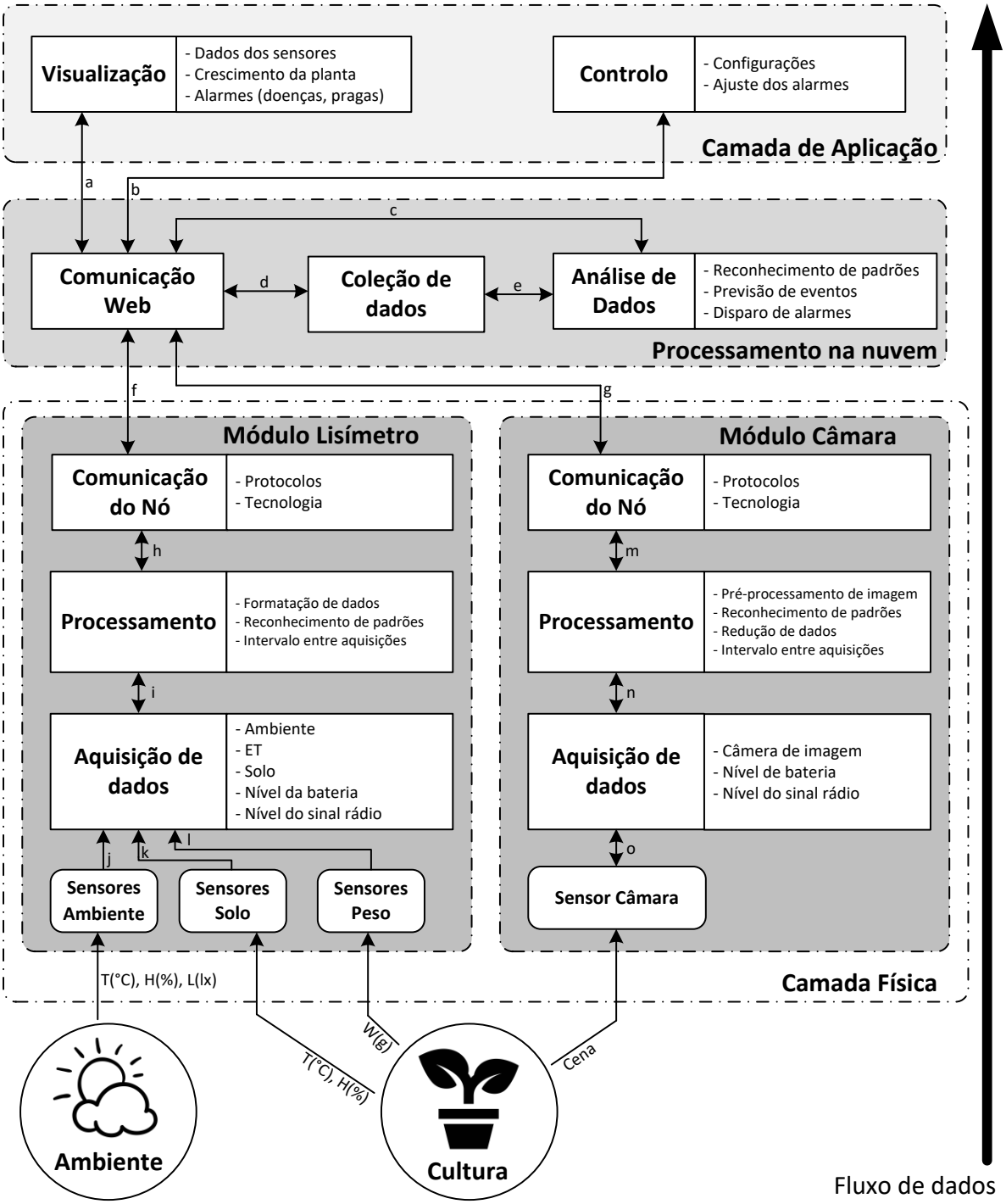

Figura 3.2: Arquitetura do sistema de um lisímetro com aquisição de imagens [2].

nuvem através de um *System on Chip* (SoC) [70] com comunicações sem fios integrado. Os dados são enviados para a **camada nuvem** em intervalos de tempo pré-definidos que podem ser programados.

Após o envio dos dados o MCU entra em modo de poupança de energia (*Low Power Mode* (LPM) [71]). Todos os sub-circuitos (SoC, Sensores, Servo-motor) são desligados e neste modo o consumo de energia é muito baixo, o que permite aumentar significativamente a autonomia da bateria. Em LPM o *timer* do MCU continua a funcionar, e decorrido o intervalo de tempo pré-definido para nova leitura dos sensores, o *timer* vai ativar todo o sistema e um novo ciclo de leituras é iniciado. Juntamente com os dados dos sensores é enviado ainda: a tensão da bateria, para avaliar o seu estado de carga; o nível de sinal rádio das telecomunicações, para obter a qualidade de ligação de dados; um *timestamp*, com a informação de data e hora da leitura dos dados, que é obtido através de servidor de tempo na Internet (*Network Time Protocol* (NTP) [72]).

A **camada física** usa uma câmara de alta resolução para a análise da saúde e crescimento da planta e controlo de possíveis pragas. As imagens adquiridas são processadas localmente, para redução de dados, e são posteriormente enviadas para a **camada nuvem**. A câmara está ligada a um micro computador (SBC [73]), que faz o pré-processamento das imagens e envia os dados através dos seus recursos de comunicações para a **camada nuvem**.

Não sendo necessário capturar imagens com a mesma frequência dos restantes sensores, dado que o crescimento das plantas é lento, é suficiente a aquisição de uma a três imagens por dia. Um SBC consome em média cerca de $5Wh$ e se estiver constantemente ligado há um consumo de energia diário muito elevado para um sistema IoT, que apenas trabalha alguns minutos por dia. O problema é solucionado com o uso de um MCU com LPM, que desliga todos os sub-circuitos (a câmara e o SBC) quando não está a ser feita a aquisição, processamento ou envio dos dados. O *timer* do MCU é programado para alimentar os sub-circuitos de acordo com o horário escolhido para aquisição das imagens.

Juntamente com as imagens também são enviados para a **camada nuvem** outros dados importantes para saber o estado do sistema, nomeadamente: a tensão da bateria, o nível de sinal rádio, e um *timestamp*, à semelhança do que acontece no módulo lisímetro.

3.1.2 Camada na Nuvem

No nível intermédio situa-se a **camada nuvem**, que é responsável pela receção e processamento dos dados provenientes dos diversos módulos: módulos lisímetros e módulos câmaras da camada física. A camada nuvem disponibiliza os seguintes serviços:

a) Protocolo de comunicações - estabelece a comunicação dos dispositivos com a camada nuvem.

b) Sistema de gestão de base de dados - armazenar todos os dados provenientes dos dispositivos;

c) Serviços de processamento de dados - reconhecimento de padrões através de *Machine Learning* ML, para a predição de eventos e geração de alarmes;

d) Servidor *WEB* [74] - disponibiliza à **camada aplicação** o acesso aos dados, configuração e gestão do sistema.

Como já referido, os dispositivos da camada física devem ser eficientes do ponto de vista energético, sendo que uma parte da energia é despendida para a transmissão de dados. A transmissão de dados sem fios aumenta o consumo de energia comparativamente a outros tipos de comunicações. Uma forma de reduzir o consumo de energia, será reduzir o tempo necessário para a transmissão dos dados, e para isso devem ser escolhidos os protocolos mais adequados. Para reduzir energia, os dados dos sensores de um dispositivo devem ser enviados de uma só vez, usando um protocolo de comunicações leve, tal como o *Constrained Application Protocol* (CoAP) [75] ou o *Message Queuing Telemetry Transport* (MQTT) [76].

Após a receção dos dados, estes são guardados numa base de dados para posterior consulta e análise. Os dispositivos IoT podem gerar um enorme volume de dados. O módulo lisímetro está programado para obter dados dos sensores de 10 em 10 minutos, o que corresponde a 6 leituras por hora, perfazendo um total de 144 leituras diárias e 52560 leituras anuais. Para armazenar este grande volume de informação, é recomendado o uso de base de dados não relacional, nomeadamente do tipo *Not only SQL* (NoSQL) [77]. Este tipo de bases de dados orientadas a documentos estão preparadas para gerir um grande volume de dados, com uma grande variedade, velocidade de acesso elevada, fiabilidade e valor. Para garantir a escalabilidade é necessário definir desde o início uma base de dados com as características referidas.

Os dados guardados na base de dados, juntamente com as imagens capturadas, são processados com recurso a técnicas de *Machine Learning* ML. Este processamento permite a predição de eventos e gerar avisos sempre que se preveja que algo não esteja bem com a cultura. Através da análise dos dados dos sensores do módulo lisímetro é possível prever o aparecimento de determinadas doenças, tais como por exemplo o míldio e o oídio. A análise das imagens provenientes do módulo câmara permitem avaliar o crescimento saudável da planta e ainda detetar doenças e possíveis pragas, gerando avisos para o agricultor.

O servidor WEB disponibiliza um serviço de acesso à informação dos lisímetros de uma forma transversal. O acesso pode ser feito das mais diversas plataformas independentemente do seu sistema operativo. A configuração e gestão do sistema também é feita através desta plataforma WEB, nomeadamente: gestão de utilizadores, parametrização do reconhecimento de padrões, configuração de alarmes e avisos, etc..

3.1.3 Camada de Aplicação

No topo do diagrama temos a **camada aplicação** que fornece diversos serviços aos utilizadores finais, tais como a configuração do sistema, a visualização dos dados, os resultados das análises de dados, configuração e exibição de alarmes, etc. Um dado utilizador acede aos dados em função das suas funções/competências, sendo criados grupos de utilizadores com as permissões bem definidas. Podendo ter nomeadamente, os seguintes grupos: Agricultores, Técnicos Agrícolas, Técnicos de hardware e Técnicos de ML.

3.2 Arquitetura do Hardware

A Figura 3.3 representa a arquitetura de hardware do sistema com base no modelo descrito atrás. Neste diagrama pode-se ver a interligação entre os diversos componentes físicos, tal como o fluxo e tipo de sinal. A Tabela 3.1 lista os acrónimos utilizados no diagrama da Figura 3.3.

Tabela 3.1: Acrónimos do hardware do sistema

	Description		Description
MCU	Micro-controlador	SBC	Micro-computador
SoC	Sistema num C.I.	PS	Fonte de alimentação
ATS	Sensor Temperatura Ambiente	AHS	Sensor Humidade Ambiente
ALS	Sensor Luz Ambiente	STS	Sensor Temperatura Solo
SMS	Sensor Humidade Solo	SWS	Sensor Peso Solo
DWS	Sensor Água Drenada	BVS	Sensor Tensão Bateria
CS	Sensor de Imagem	SM	Servo Motor válvula
Data	Dados	PW	Energia
Ctrl	Sinal de Controlo		

Com base no diagrama da Figura: 3.3 é possível escolher os componentes eletrónicos no mercado, de forma a atender às especificações pretendidas para o lisímetro.

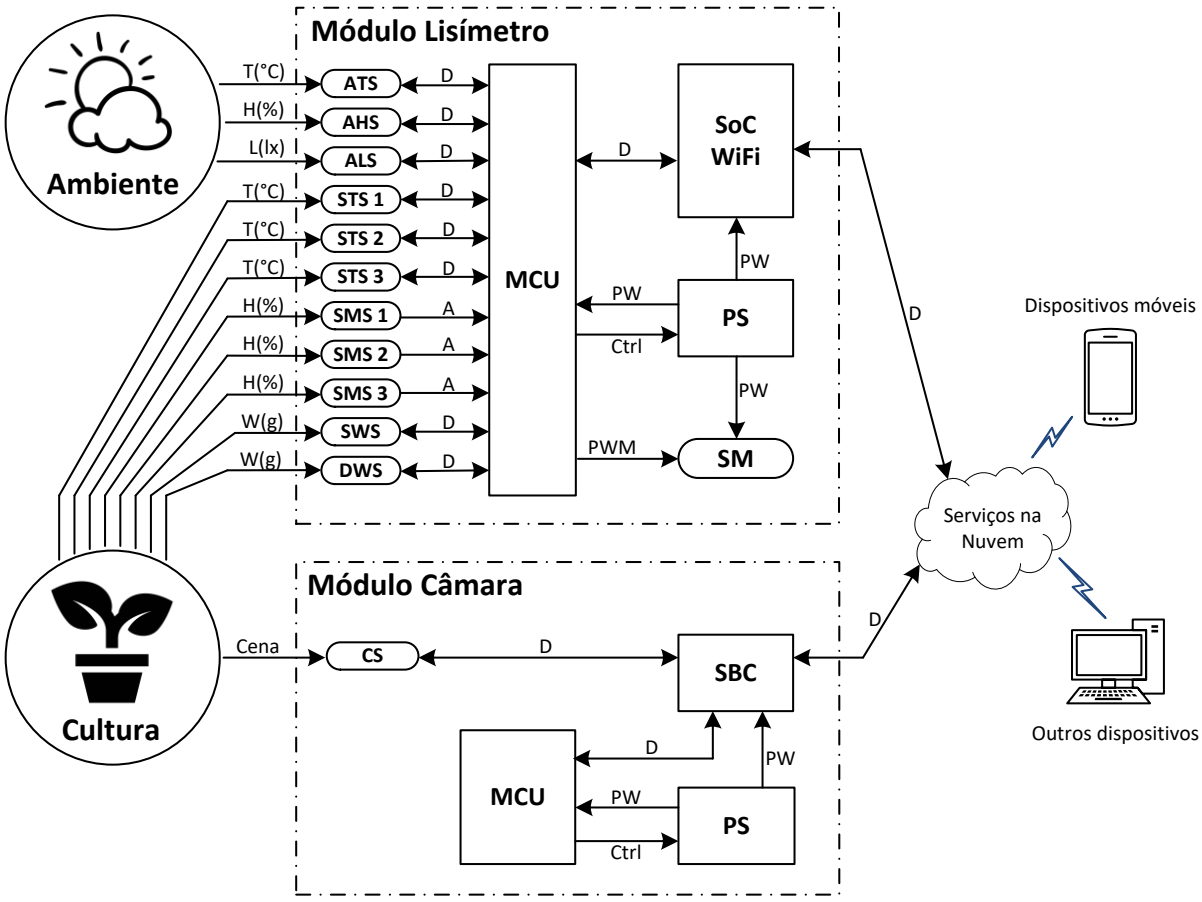

Figura 3.3: Arquitetura do hardware do sistema [2].

3.3 Conclusão

A arquitetura proposta é o ponto de partida para o desenvolvimento e construção de um protótipo funcional de um lisímetro. A abordagem IoT permite uma redução de custos, elevado desempenho, escalabilidade, eficiência energética, disponibilidade em tempo real dos dados, bem como uma análise autónoma e automática dos mesmos.

O facto dos módulos lisímetro e câmara estarem grande parte do tempo em LPM, torna-os eficientes do ponto de vista energético, e podem trabalhar em condições de temperaturas extremas.

A análise de dados através de técnicas de DL necessita de grandes quantidades de amostras para terem um bom desempenho. A centralização dos dados provenientes de diversos lisímetros, pode gerar de uma forma rápida um grande conjunto de dados, o que

permite obter uma boa precisão comparado com outros sistemas.

Para obter bons resultados é importante que os agricultores possam interagir com o sistema, registando na plataforma a sua análise da cultura sempre que sejam feitas visitas. Este procedimento permite a calibração do sistema e aumento do seu constante desempenho.

Esta arquitetura permite a monitorização permanente com o consequente aumento da produtividade das culturas, e a redução do consumo de água, porque é possível determinar apenas a quantidade necessária de água que determinada plantação precisa.

Capítulo 4

Implementação Experimental

Neste capitulo é descrita a implementação física do protótipo experimental do lisímetro. Com base nas especificações pretendidas, é feita a escolha de componentes para o protótipo.

4.1 Introdução

Para implementar a arquitetura descrita no capitulo anterior, desenvolvemos um protótipo funcional o qual é composto por 4 partes:

1. Módulo Lisímetro;
2. Módulo Câmara;
3. Módulo Computacional;
4. Estrutura de Suporte.

Os componentes que compõem o sistema foram escolhidos atendendo às especificações pretendidas para o lisímetro. A Tabela 4.1 apresenta a especificações pretendidas para o nosso protótipo.

4.2 Módulo Lisímetro

A estrutura de hardware do módulo do lisímetro é apresentada na Figura 4.1. A Tabela 4.2 apresenta a legenda dos componentes usados para implementação, incluindo as especificações mais importantes. O diagrama contem representadas as interligações entre os dispositivos.

Tabela 4.1: Especificações/requisitos pretendidas para o protótipo.

Descrição	**Especificação/Requisito**
Módulo Lisímetro	
Microcontrolador	Baixo consumo de energia
Comunicações	Wi-Fi
Sensor de Temperatura Ambiente	-10ºC:+50ºC, ±1ºC
Sensor de Humidade Ambiente	0–100% RH, ±5%
Sensor de Luz Ambiente	Luz visível e IR
Sensor de Temperatura do Solo	-10ºC:+50ºC, ±1ºC
Sensor de Humidade do Solo	0–100% RH, ±10%
Sensor de Peso do Solo	Erro < ±100gr
Sensor de Peso da Água Drenada	Erro < ±10gr
Servomotor	Torque > 2,5Kg/cm
Alimentação	Bateria + Painel solar
Módulo Câmara	
Sensor de Imagem	Resolução de imagem > 4Mpx
Computador numa Placa	CPU ARM, 2MB RAM, CSI, GPIO
Microcontrolador	Baixo consumo de energia
Alimentação	Bateria + Painel solar
Módulo Computação na Nuvem	
Servidor	Virtual e *Open Source*
Instalação de serviços	*Containers*
Protocolo de comunicação	Publicação / Subscrição
Base de dados	Não relacional
Processamento de dados	*Machine Learning*
Envio de imagens	*Open* SFTP
Servidor WEB	*Open Source*
Estrutura de Suporte	
Estrutura	Metálica, pintura anti-corrosão

4.2.1 Escolha de componentes

Para a realização do protótipo procurou-se no mercado componentes com as especificações pretendidas, com o objetivo de criar um protótipo recorrendo às mais recentes tecnologias, e de elevada precisão e com custos controlados. A seguir apresentamos a descrição e justificação para a escolha de cada componente.

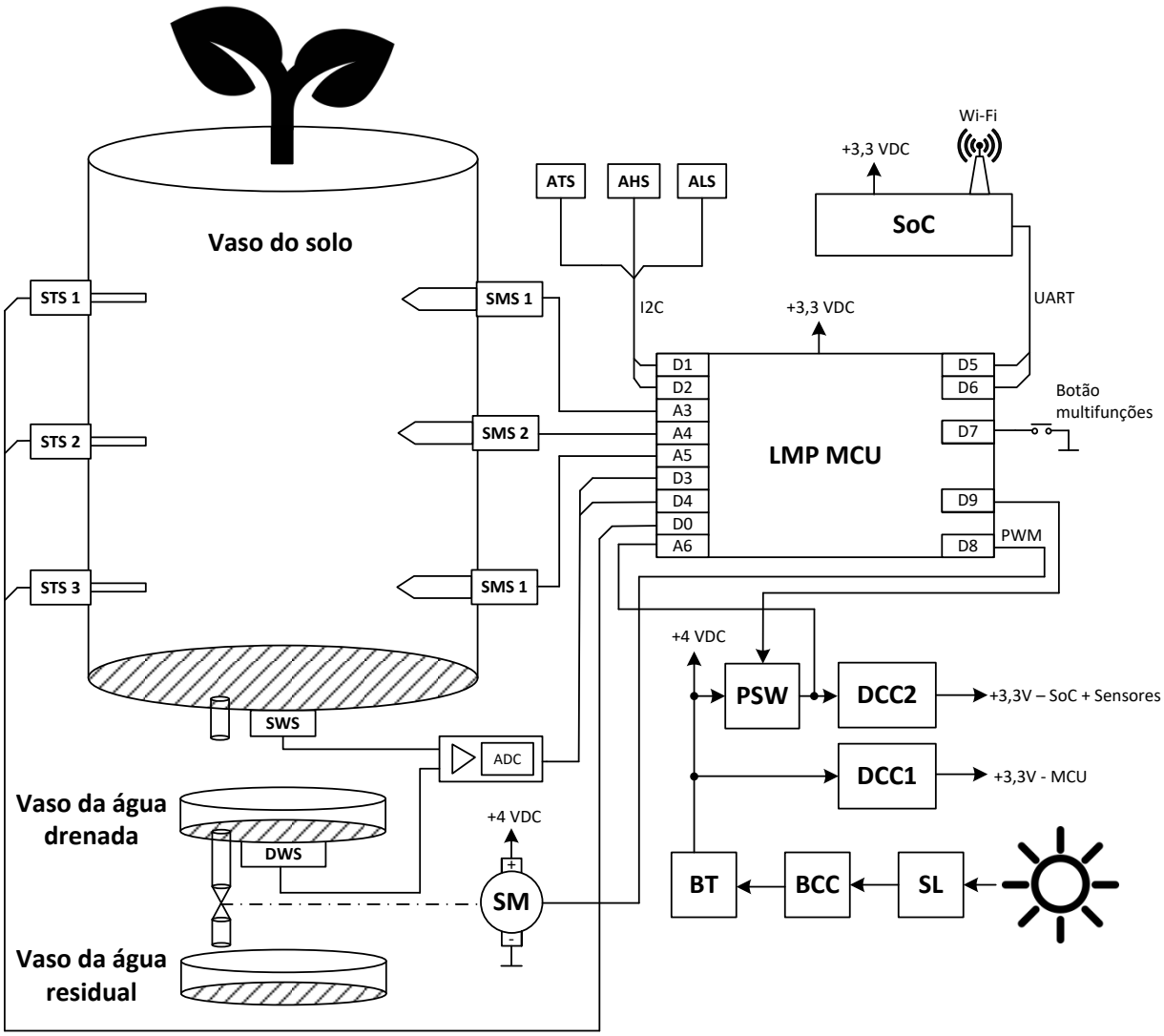

Figura 4.1: Diagrama de blocos do hardware do módulo lisímetro [2].

MCU - Microcontrolador

Para controlar o módulo foi escolhido o MCU MSP430G2553 [1] devido ao seu baixo consumo de energia e custo. Este MCU dispõe de portas analógicas e digitais necessárias para ligar os diversos sensores pretendidos. Possui um barramento (*Inter-Integrated Circuit* (I2C)) que permite interligar os sensores com essa tecnologia de comunicação, e uma interface série (*Universal Asynchronous Receiver-Transmitter* (UART)) necessária para comunicar com o SoC. No diagrama da Figura 4.1 o MCU está identificado com as portas usadas

[1] MSP430G2553 - Especificações: https://www.ti.com/product/MSP430G2553

Tabela 4.2: Componentes de hardware do módulo lisímetro.

	Descrição	Modelo	Especificações
MCU	Microcontrolador	MSP430G2553	16 MHz, 16KB/512B, LPM
SoC	Sistema num *Chip*	ESP8266-01	Wi-Fi, 3.3VDC
ATS	Sensor Temperatura Ambiente	SHT30	(I2C) -40ºC:+80ºC, ±0.3ºC
AHS	Sensor Humidade Ambiente	SHT30	(I2C) 0–100% RH, ±2.0%
ALS	Sensor Luz Ambiente	TSL2561	(I2C) Visível IR
STS	Sensor Temperatura do Solo	DS18B20	(1Wire) -10ºC:+85ºC, ±0.5ºC
SMS	Sensor Humidade do Solo	CSMS	Sensor Capacitivo Grove
SWS	Sensor Peso do Solo	HX711	4 células de 1/2 ponte
DWS	Sensor Peso da Água Drenada	HX711	1 célula ponte *Wheatstone*
BVS	Sensor Tensão da Bateria	Resistivo	Divisor tensão resistivo
SM	Servomotor	HS422	(PWM) 180º, 3.3Kg/cm
SL	Painel Solar Fotovoltaico	FAL09004	5VDC, 1W, 110×60mm
BCC	Controlador Carga da Bateria	TP4056	1A, 1×BAT Li-Ion
BT	Bateria Li-Ion	INR18650-35E	3.6V, 3500mAh, Samsung
PSW	Interruptor de potência	DMP2022LSS	-10A, P-MOSFET
DCC1	Conversor DC/DC MCU	MCP1700-3302	3.3V, 250mA, LDO
DCC2	Conversor DC/DC	MCP1700-3302	3.3V, 250mA, LDO

para interligação com os diversos tipos de sensores. A Figura 4.2 apresenta a estrutura interna do MSP430G2553, com os diversos módulos periféricos realçados.

SoC - Sistema num *Chip*

Como a rede sem fios escolhida para o protótipo foi a tecnologia *Wireless Local Area Network* (WLAN) [79], o módulo WLAN ESP-01 [2] com o SoC ESP8266 [3] foi o selecionado, devido às suas especificações técnicas. É um módulo de reduzidas dimensões, compatível com as normas de redes sem fios IEEE 802.11b/g/n, com um *Central Processing Unit* (CPU) 32bits com uma frequência de 160MHz, uma porta de comunicação UART, e um consumo médio de 71mA, suportando uma tensão de alimentação entre 3,0V e 3,6V. A Figura 4.3, mostra uma imagem do módulo ESP-01.

[2]ESP-01 - Especificações: https://docs.ai-thinker.com/_media/esp8266/docs/esp-01_product_specification_en.pdf

[3]ESP8266 - Especificações: https://www.espressif.com/en/products/socs/esp8266

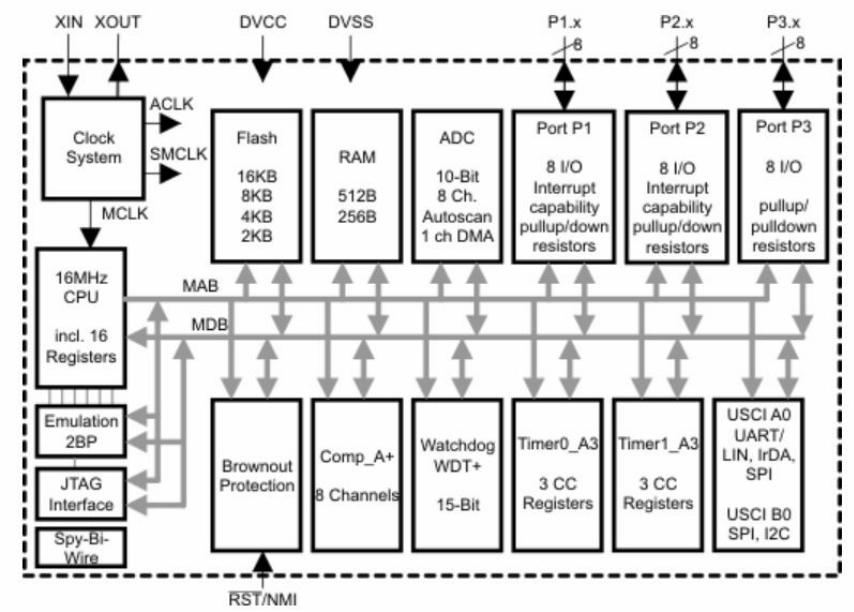

Figura 4.2: Estrutura interna do MCU MSP430G2553 [78].

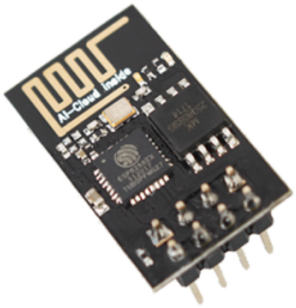

Figura 4.3: Módulo WLAN ESP-01 com SoC ESP8266 [80].

ATS/AHS - Sensor de Temperatura e Humidade Ambiente

Para medição da temperatura e humidade do ar ambiente foi usado um módulo com o sensor SHT30 [4], desenvolvido pela *Sensirion*. A versão usada recorre à interface I2C para as comunicações com o MCU. Este sensor é uma referência na indústria devido à sua elevada precisão e baixo custo. Este sensor tem uma precisão de ±0.3ºC para temperaturas de -40ºC a +80ºC, e uma uma precisão de ±2.0% para valores de humidade relativa entre 0 e 100%. A Figura 4.4 apresenta o módulo com o sensor SHT30.

[4]SHT30 - Especificações no URL: https://www.sensirion.com/fileadmin/user_upload/customers/sensirion/Dokumente/2_Humidity_Sensors/Datasheets/Sensirion_Humidity_Sensors_SHT3x_Datasheet_digital.pdf

Figura 4.4: Módulo com sensor de temperatura e humidade ambiente SHT30 [81].

Para a sua instalação no exterior, o módulo foi instalado numa caixa plástica, a qual foi perfurada de forma permitir a circulação o ar ambiente, e ao mesmo tempo, não permitir a entrada da água da chuva.

ALS - Sensor de Luminosidade

Para medir a intensidade da luminosidade ambiente é usado um módulo com o sensor TSL2561 [5], desenvolvido pela *AMS* e usa a interface I2C. Este dispositivo possui internamente dois sensores, o primeiro mede a intensidade da luz visível com a luz infravermelha (IR) e o segundo apenas mede a intensidade da luz IR. A saída digital ligada a um MCU e usando uma função de conversão permite obter o valor da iluminação em lux idêntica à resposta do olho humano. A Figura 4.5 apresenta o módulo usado no protótipo.

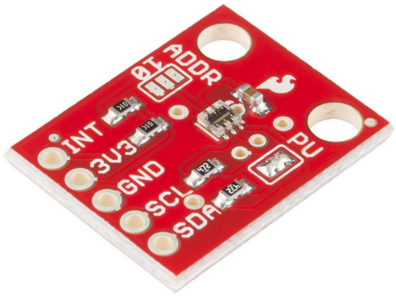

Figura 4.5: Módulo com Sensor de Luminosidade TSL2561 [82].

Este módulo está instalado na mesma caixa com o módulo sensor SHT30. Ambos os sensores usam o protocolo I2C permitindo, assim, usar a mesma cablagem para ligação ao MCU.

[5] TSL5261 - Especificações: https://ams.com/documents/20143/36005/TSL2561_DS000110_3-00.pdf/18a41097-2035-4333-c70e-bfa544c0a98b

STS - Sensor de Temperatura do Solo

O vaso do solo está equipado com um conjunto de sensores de humidade e temperatura a diferentes profundidades. A temperatura do solo é medida recorrendo a sensores DS18B20 [6], da *Maxim Integrated*, com tecnologia de comunicação *OneWire* [83], que permitem medir temperaturas entre -10ºC e +85ºC com uma precisão de ±0,5ºC. Estes 3 sensores estão ligados em paralelo a uma porta digital bi-direcional do MCU. A Figura 4.6 apresenta uma imagem do sensor de temperatura, que é selado de modo a ser à prova de água, usado na realização experimental.

Figura 4.6: Sensor de temperatura DS18B20 á prova de água [84].

A instalação destes sensores no vaso é efetuada através de bucins PG7, de modo a garantir a estanquidade do vaso.

SMS - Sensor de Humidade do Solo

A humidade do solo é medida com sensores capacitivos resistentes à corrosão, produzidos pela *Seeed Grove* [7]. O nível de humidade é medida em função da alteração da capacidade do dialétrico da sonda capacitiva do sensor. Como a sonda do sensor não tem partes metálicas expostas, é mais resistente à corrosão, e mantendo a estabilidade das leituras por muito mais tempo.

As saídas dos sensores são ligadas a portas analógicas do MCU, cujo conversor *Analog to Digital Converter* (ADC) tem uma resolução de 10 bits. Estes sensores necessitam de uma calibração prévia para ajustar a percentagem de humidade medida ao tipo de solo.

A electrónica do sensor foi encapsulado numa caixa com certificação IP65 de modo a assegurar o correto funcionamento em ambiente exterior e manter a estanquidade do vaso.

[6] DS18B20 - Especificações: https://datasheets.maximintegrated.com/en/ds/DS18B20.pdf

[7] CSMS - Especificações: https://files.seeedstudio.com/wiki/Grove-Capacitive_Moisture_Sensor_Corrosion_Resistant/res/soil_sensor.pdf

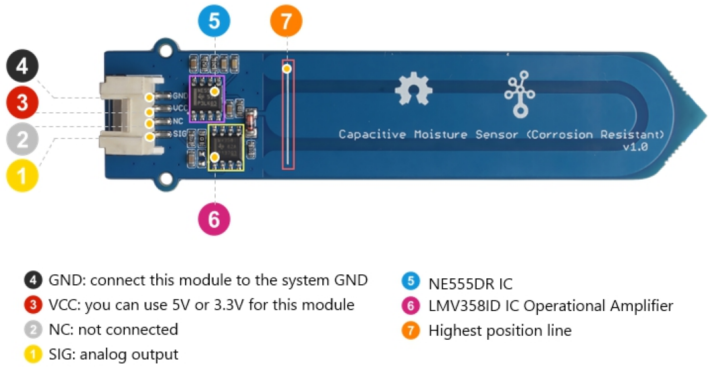

Figura 4.7: Sensor Capacitivo para Medição da Humidade do Solo [85].

SWS - Sensor de Peso do Solo

O vaso do solo é pesado recorrendo a 4 células de carga de 50Kg. Este conjunto de células permite usar vasos com solo e plantas até 200Kg de peso com um erro inferior a ±50g . A Figura 4.8 mostra a imagem de uma das células de carga usadas.

Figura 4.8: Célula de carga de 50Kg com 1/2 ponte de *Wheatstone* [86].

Cada célula dispõe de 1/2 ponte de *Wheatstone*. Recorrendo a um circuito elétrico com o esquema da Figura 4.9 é possível obter o equivalente eléctrico de uma ponte completa *Wheatstone* através de 4 células de 1/2 ponte.

Este conjunto de células está ligado a um circuito integrado (*Integrated Circuit* (IC)) que contém internamente um amplificador e um conversor analógico-digital(ADC) com a designação HX711 [8]. Este IC comunica com o MCU recorrendo a um protocolo proprietário, usando 2 portas (*Data* e *Clock*). Este IC HX711 tem 2 canais, o que permite ligar 2 células

[8] HX711 - Especificações: https://cdn.sparkfun.com/datasheets/Sensors/ForceFlex/hx711_english.pdf

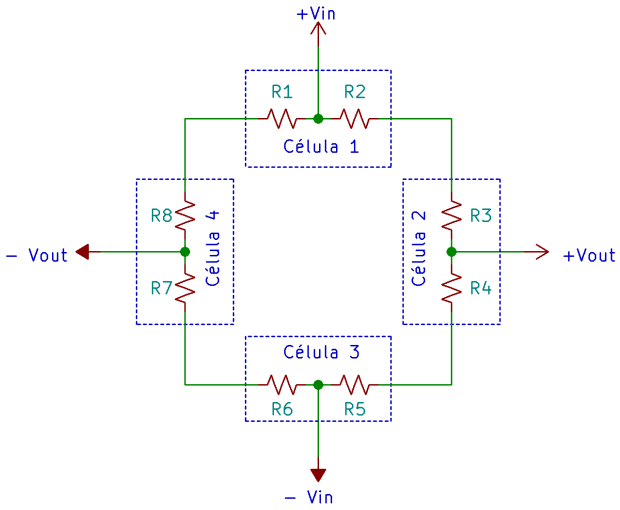

Figura 4.9: Esquema de ligação de 4 células de 1/2 ponte de *Wheatstone*.

de carga, o ADC tem uma resolução de 24bits. A Figura 4.10 apresenta o diagrama de blocos interno do HX711. A Figura 4.11 apresenta o módulo HX711 utilizado.

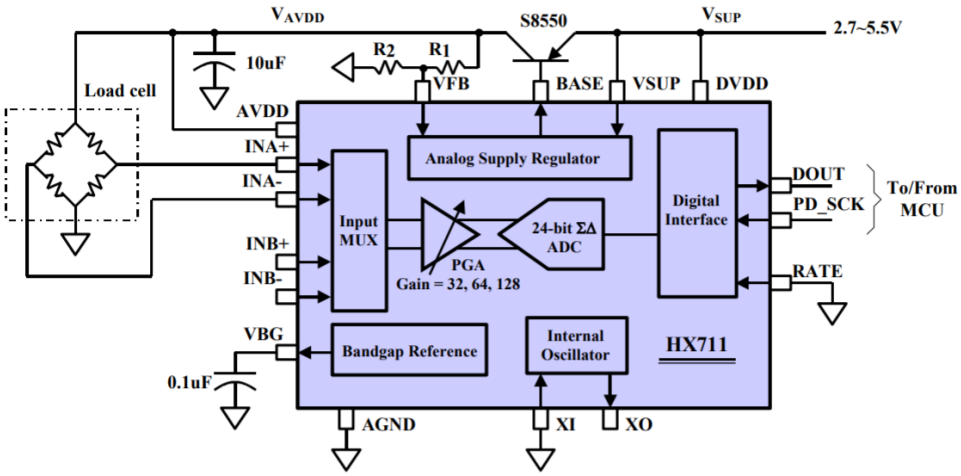

Figura 4.10: Diagrama de blocos do CI HX711 [87].

O módulo HX711 foi encapsulado numa caixa de plástico estanque com certificação IP65, para assegurar o seu correto funcionamento em ambiente exterior. A caixa com o módulo HX711 foi instalada o mais próximo das células de modo a reduzir o máximo possível interferências eletromagnéticas.

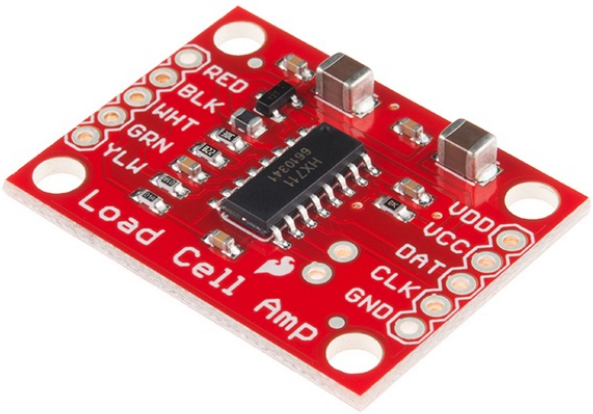

Figura 4.11: Módulo com CI HX711 [88].

DWS - Célula de Carga da Água Drenada

O vaso da água drenada é pesado com uma célula de carga de 10Kg [9] com ponte de *Wheatstone*. O erro da célula de carga é inferior a 5g. A Figura 4.12 apresenta uma imagem da célula utilizada. Esta célula está ligada a um outro canal do módulo HX711 já descrito.

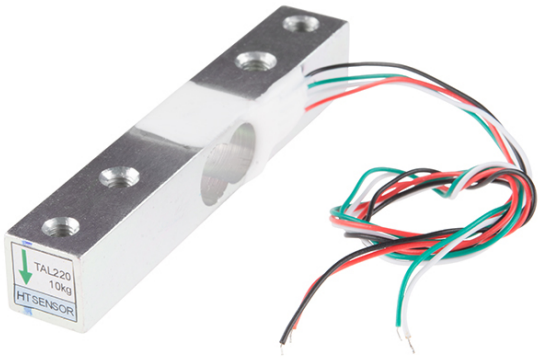

Figura 4.12: Célula de carga de 10Kg [89].

[9] Célula de carga 10Kg - Especificações: https://cdn.sparkfun.com/datasheets/Sensors/ForceFlex/TAL220M4M5Update.pdf

BVS - Sensor da Tensão da Bateria

O estado da carga da bateria é proporcional à tensão dos seus terminais. Para fazer a leitura da tensão da bateria é usado o ADC interno do MCU. O ADC foi programado para usar como referência a referência interna de 2500mV, o que implica que a tensão máxima de entrada na porta analógica não pode exceder esse valor. Para obter uma amostra proporcional da tensão da bateria é usado um divisor resistivo por intermédio de duas resistências (R4 e R5). A Figura 4.13 apresenta o divisor de tensão implementado, com um condensador para estabilizar a tensão medida.

A tensão máxima da bateria totalmente carregada é de 4200mV, com um fator de divisão de 2, a tensão à entrada da porta do ADC é de 2100mV. Analisando a malha resistiva, a tensão à saída do divisor resistivo é dada por: $V_{sens} = \frac{R5}{R4+R5} \times V_{bateria}$. Recorrendo a duas resistências de $10k\Omega$, obtemos o divisor pretendido com uma corrente na malha inferior a $210\mu A$.

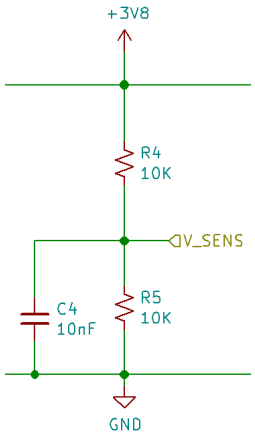

Figura 4.13: Medição da Tensão da Bateria do Lisímetro [II.1].

SM - Servomotor

Para fazer a abertura da passagem da água drenada após a sua pesagem, é usado um servomotor de radio-modelismo, nomeadamente foi escolhido o modelo HS-422 [10] da *HiTec*. Este servomotor possui um torque mínimo de 3.3Kg/cm, e uma rotação de 180º que são suficientes para acionar a válvula de descarga do vaso da água drenada. A Figura 4.14 apresenta a imagem deste servomotor.

[10] HS-422 - Especificações: https://hitecrcd.com/products/servos/analog/sport-2/hs-422/product

Figura 4.14: Servomotor HS-422 para abertura de válvula do vaso da água drenada [90].

SL - Painel Solar Fotovoltaico

Foi escolhido o sol como fonte de energia do sistema. Atendendo ao consumo de energia do nosso módulo foi escolhido um painel solar mono-cristalino de 5V, com uma potência máxima de 1W, com capacidade para fornecer a energia necessária para carregar a bateria. A Figura 4.15 apresenta a imagem do painel solar.

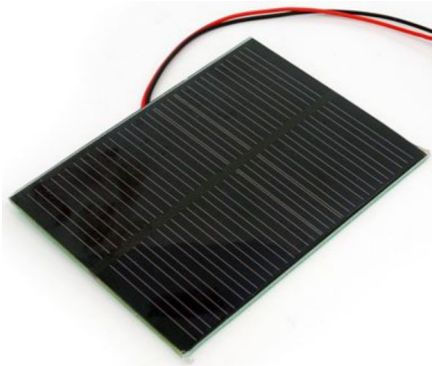

Figura 4.15: Painel solar de 5V 1W [91].

BCC - Controlador de Carga da Bateria

De modo a carregar adequadamente a bateria, é necessário um controlador de carga, tendo sido escolhido um módulo com um controlador dedicado para carregar baterias de Li-Ion de apenas uma célula, o módulo CI TP4056 [11]. Este módulo permite carregar com uma corrente máxima de 1A, com tensões de entrada de $4,5VDC$ a $5,5VDC$. A Figura 4.16 apresenta a imagem do módulo escolhido.

[11] TP4056 - Especificações: http://www.tp4056.com/d/tp4056.pdf

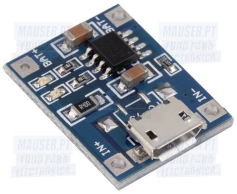

Figura 4.16: Módulo Controlador de Carga de Bateria com TP4056 [92].

BT - Bateria

Para que o sistema funcione independente das condições meteorológicas, é importante que nunca falte energia ao sistema. Para assegurar o fornecimento ininterrupto de energia é usada uma bateria de iões de lítio (Li-Ion)[93] com capacidade suficiente para manter o sistema em funcionamento mesmo com vários dias sem presença de sol. A Figura 4.17 apresenta a imagem da bateria *Samsung* INR18650-35E[12], com uma tensão nominal de $3,6V$ e uma capacidade de $3500mAh$, usada no protótipo.

Figura 4.17: Bateria de iões de lítio INR18650-35E da *Samsung SDI* [94].

PSW - Interruptor de potência

Pretende-se fazer leituras dos sensores com intervalos de 10 minutos, pelo que não é necessário que todo o sistema esteja a ser alimentado em continuo, apenas o MCU necessita de ser alimentado sem interrupções. Para se poupar a energia da bateria os sensores e o servomotor apenas são alimentados quando se pretende obter a sua ou o seu acionamento, respetivamente. Assim, é usada uma porta do MCU para controlar o interruptor de potência de forma a alimentar os sensores e o SoC apenas quando necessário. Para isso,

[12] INR18650-35E - Especificações: https://www.orbtronic.com/content/samsung-35e-datasheet-inr18650-35e.pdf

foi escolhido o transístor DMP2022LS [13] que é usado como interruptor. É um transístor MOSFET do tipo P, que permite controlar uma corrente até $-8A$ @ $+75^{o}$C, e possuiu uma baixa resistência de $25m\Omega$ @ $V_{GS} = 2,5V$.

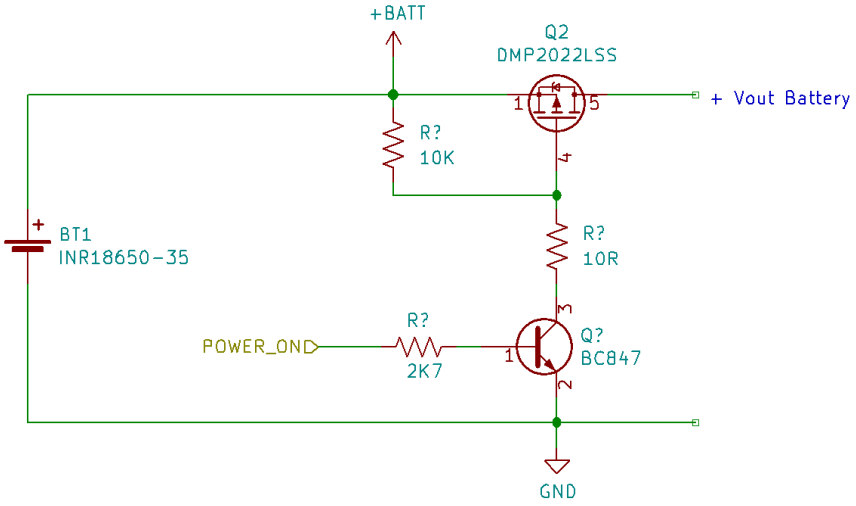

Figura 4.18: Circuito do interruptor de potência com MOSFET [Apêndice II.1].

O circuito elétrico do interruptor de potência está apresentado na Figura 4.18. A resistência R1 garante a zona de corte quando o transístor Q1 também está ao corte, evitando que o transístor entre na zona de tríodo. A resistência R2 garante a saturação de Q1 quando a porta do MCU está com nível lógico 1 ($3,3V$). Quando o transístor Q1 está saturado obriga também à saturação de Q2. Quando o transístor Q2 está saturado permite a circulação de corrente que alimenta os sensores, o servomotor e o SoC.

DCC1 - Conversor DC/DC MCU

Os MCU são dispositivos sensíveis a sobretensões, pelo que devem ser alimentados com a tensão indicada pelo fabricante ($1,8V$ a $3,6V$) no caso do MSP430G2553. A tensão da bateria varia entre $3,3V$ (descarregada) a $4,2V$ (carregada). Para alimentar o MCU adequadamente com a tensão recomendada de $3,3V$, é usado um regulador de tensão MCP1700-330 [14], que fornece uma tensão de saída fixa de $3,3V$ para uma corrente máxima de $250mA$. Tem um baixo consumo de energia em repouso ($1,6\mu A$), e apresenta uma baixa queda de tensão (LDO $178mV$), o que o torna adequado para o nosso sistema.

[13] DMP2022LS - Especificações: https://www.diodes.com/assets/Datasheets/ds31373.pdf
[14] MCP1700-330 - Especificações: https://ww1.microchip.com/downloads/en/DeviceDoc/MCP1700-Low-Quiescent-Current-LDO-20001826E.pdf

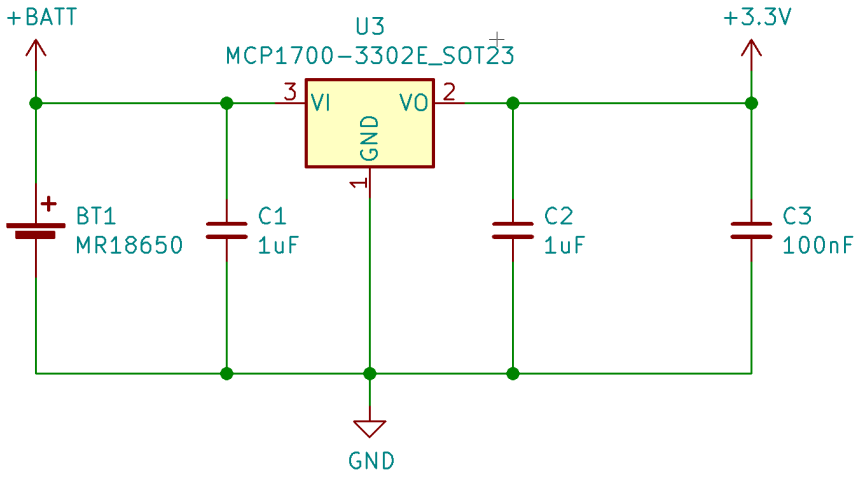

Figura 4.19: Circuito do conversor DC/DC para alimentar o MCU [Apêndice II.1].

A Figura 4.19 apresenta o circuito conversor DC/DC para alimentar o MCU. Os valores dos condensadores C1 e C2 são os recomendados pelo fabricante.

DCC2 - Conversor DC/DC - Sensores e SoC

A tensão de alimentação dos sensores e do SoC é igual ao do MCU sendo o consumo médio do conjunto é inferior a 250mA, pelo que foi escolhido o regulador de tensão MC1700-330, pelas características já apresentadas usando-se o mesmo circuito da Figura 4.19.

4.2.2 Implementação do módulo do lisímetro

A implementação do módulo foi dividida em três partes. Uma parte diz respeito ao software desenvolvido para o MCU MSP430G2553, outra para o software desenvolvido para o SoC ESP8266, e a última corresponde à concepção do hardware: placa de circuito impresso, instalação dos componentes e respectiva caixa.

Software do MCU

Para o desenvolvimento e teste do código para o MCU, foi usada uma placa de desenvolvimento MSP-EXP430G2ET [15] da *Texas Instruments*, apresentada na Figura 4.20.

A programação do MCU foi realizada recorrendo ao ambiente de desenvolvimento integrado (*Integrated Development Environment* (IDE)) *Code Composer Studio* (CCS) [96]. O

[15] EXP430G2ET - Especificações: https://www.ti.com/lit/ug/slau772a/slau772a.pdf?ts=1638397419840

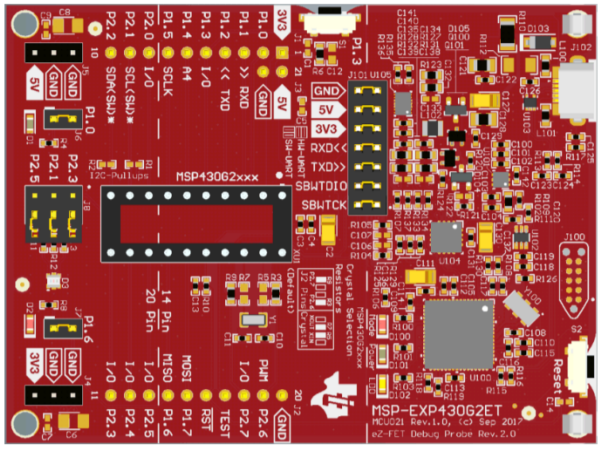

Figura 4.20: Placa de desenvolvimento EXP430G2ET [95].

código foi escrito em linguagem de programação C. A Tabela 4.3 apresenta os ficheiros de código desenvolvidos para o MCU, listando as diversas bibliotecas usadas para comunicação e interface com os sensores.

Tabela 4.3: Código desenvolvido para o MCU MSP430G2553.

Nome	Descrição	Loc.
main.c	Código principal	I.1
CDC.c	Biblioteca com funções de comunicação e conversão de dados	I.2
delay.h	Biblioteca com funções de atraso de ms e μs segundos	I.3
ds18b20.h	Biblioteca com funções dos sensores DS18B20	I.5
ds18b20.c	Biblioteca com funções dos sensores DS18B20	I.4
hx711.h	Biblioteca com funções do HX711	I.6
servo.h	Biblioteca com funções de controlo do servomotor	I.7
sht3x.h	Biblioteca com funções do sensor SHT30	I.8
TSL2561.h	Biblioteca com funções do sensor TSL2561	I.9
swi2c_master.h	Biblioteca com funções do protocolo I2C por software	I.11
swi2c_master.c	Biblioteca com funções do protocolo I2C por software	I.10

O MCU para além de fazer a leitura dos dados dos sensores, faz a gestão de energia do módulo. Pretende-se fazer a leitura dos sensores a intervalos de tempo de 10 minutos, sendo necessário menos de 60 segundos para fazer a leitura de todos os sensores, drenar a água do vaso intermédio, e enviar os dados para o SoC, que são posteriormente enviados para a camada nuvem. Como durante cerca de 90% do tempo o sistema não está a produzir trabalho, o MCU é usado para para ligar e desligar os sensores e o SoC. Após a leitura dos

sensores e a comunicação com o SoC terminar, o MCU desliga os subcircuitos entrando em modo de baixo consumo LPM. Este ciclo de leitura de dados volta a repetir-se quando é atingido o intervalo de tempo pré-definido para leitura dos dados ou caso se pressione o botão multifunções. A Figura 4.21 apresenta um diagrama com o funcionamento do software do MCU.

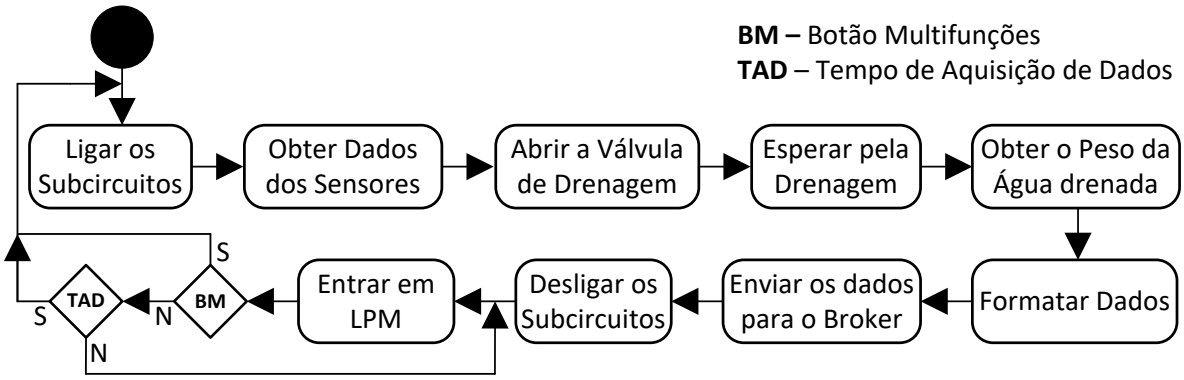

Figura 4.21: Diagrama de funcionamento do Módulo Lisímetro.

O ficheiro *main.c* contém o código principal do MCU, este foi implementada uma máquina de estados com as funcionalidades atrás descritas. Este programa faz inclusão de bibliotecas dos sensores e utilitários, necessárias para o correto funcionamento. O cabeçalho de cada biblioteca possui a documentação sobre o autor e histórico do seu desenvolvimento.

Software do SoC

A programação do módulo SoC ESP8266 foi feita recorrendo ao IDE Arduino [16]. Para desenvolver e testar o código, usamos a placa de programação ESP8266PROG [17], específica para programar módulos ESP-01, desenvolvida pela *JOY-it*. A Figura 4.22 apresenta a placa de programação do módulo ESP-01 com um módulo ligado.

O SoC ESP8266 recebe os dados formatados vindos do MCU através da sua porta série e, depois de estabelecer uma ligação de internet, obtém a data e hora atual através de um servidor NTP [72] para colocar uma marca temporal nos dados. A seguir esses dados são empacotados num objeto *JavaScript Object Notation* (JSON) [98], e enviados para camada de nuvem usando o protocolo MQTT [76] através de uma publicação. Adicionalmente

[16] Arduino IDE 1.8.16 - Especificações: https://www.arduino.cc/en/software
[17] ESP8266PROG - Manual: https://joy-it.net/files/files/Produkte/SBC-ESp8266-Prog/SBC-ESP8266-Prog-Manual.pdf

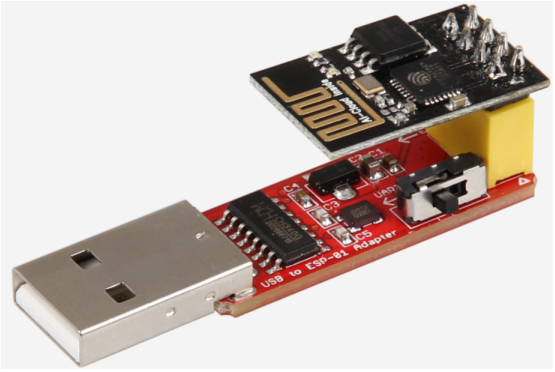

Figura 4.22: Placa de programação de módulos ESP-01 [97].

também é enviado o nível de sinal da rede WiFi, para aferir a qualidade da ligação com a *internet*.

O código da função *loop()* com a implementação das funcionalidades pretendidas, pode ser visualizado no Apêndice I.12. A Tabela 4.4 lista os ficheiros de código usado no SoC ESP8266.

Tabela 4.4: Código usado no SoC ESP8266.

Nome	Descrição
MQTT_Lysimeter.ino	Código principal I.12.
NTPClient.h	Cliente NTP, para obter a data e a hora da *internet*.
EspMQTTClient.h	Cliente MQTT para ESP8266.
WiFiManager.h	Gestor de rede Wi-Fi.
EasyButton.h	Utilitário Wi-Fi para ligação à rede pela 1ª vez.

Apenas foi desenvolvido de raiz o código principal **"MQTT_Lisimetro.ino"** sendo que todas as outras bibliotecas foram obtidas pela partilha de código desenvolvido por terceiros. A origem das bibliotecas é apresentada sobre a forma de um comentário junto da diretiva de importação das mesmas no código principal. Estas bibliotecas foram previamente instaladas no IDE *Arduino*.

Hardware

O esquema elétrico completo do módulo lisímetro é apresentado na Figura 4.23. O esquema do circuito elétrico foi realizado com o software (*Electronics Design Automation* (EDA))

KiCad [18], que também permite o desenho das placas de circuito impresso (*Printed Circuit Board* (PCB)).

Este circuito foi realizado com uma placa de circuito impresso perfurada ponto a ponto, instalada dentro de uma caixa IP65 com dimensões 82.1x158.5x55mm. A estanquidade da passagem dos diversos cabos dos sensores é assegurada por meio da utilização de bucins. A Figura 4.24 mostra imagens da caixa do módulo lisímetro e do seu interior.

O Apêndice III.1 apresenta um orçamento detalhado dos custos com material para construir o módulo, tendo sido despendida a importância de cerca de €240 para aquisição do material necessário.

[18] KiCad - Características: https://www.kicad.org/

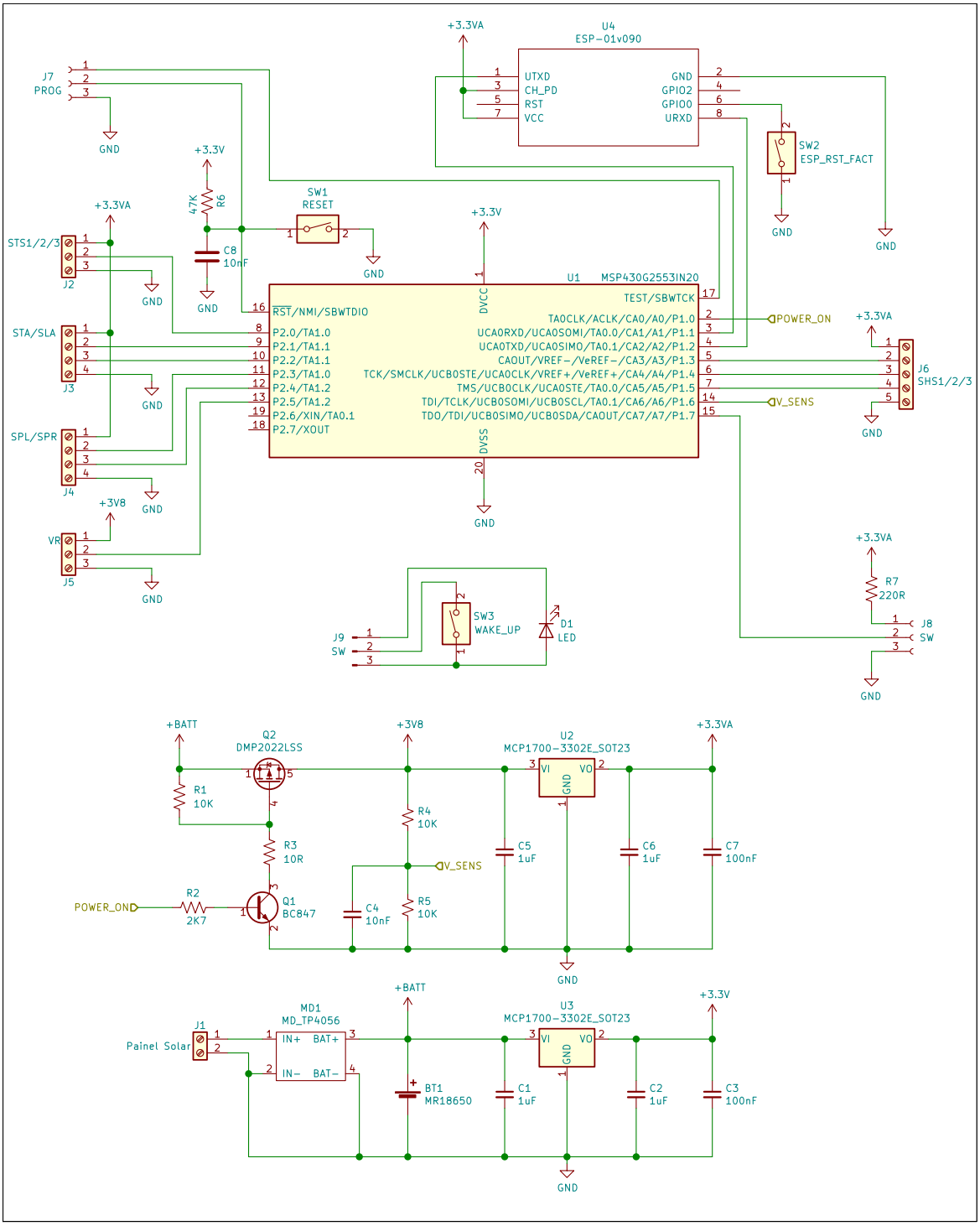

Figura 4.23: Esquema Elétrico Completo do Módulo Lisímetro

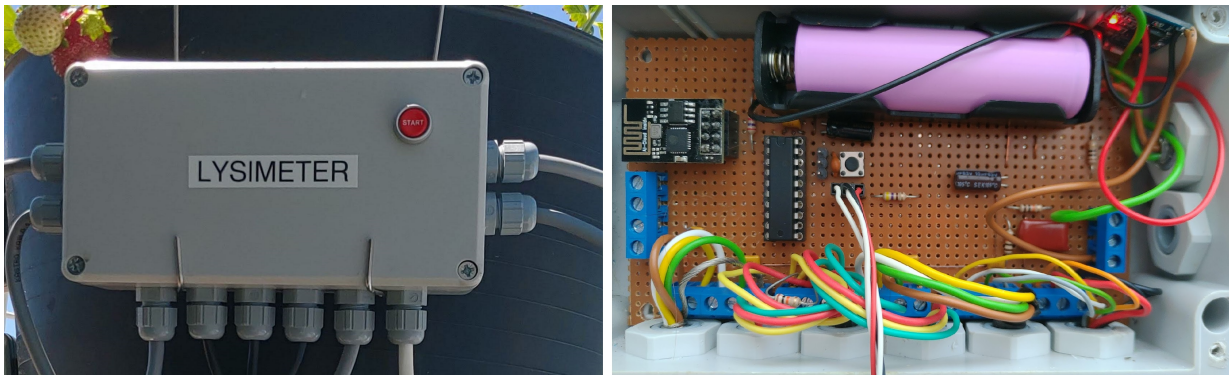

Figura 4.24: Caixa do módulo lisímetro

Figura 4.25: Visão geral do lisímetro.

4.3 Módulo Câmara

A estrutura de hardware do módulo da câmara é apresentada na Figura 4.26. A Tabela 4.5 apresenta a listagem e legenda dos componentes usados para implementação, incluindo as especificações mais importantes. O diagrama ilustra as interligações entre os diversos

dispositivos.

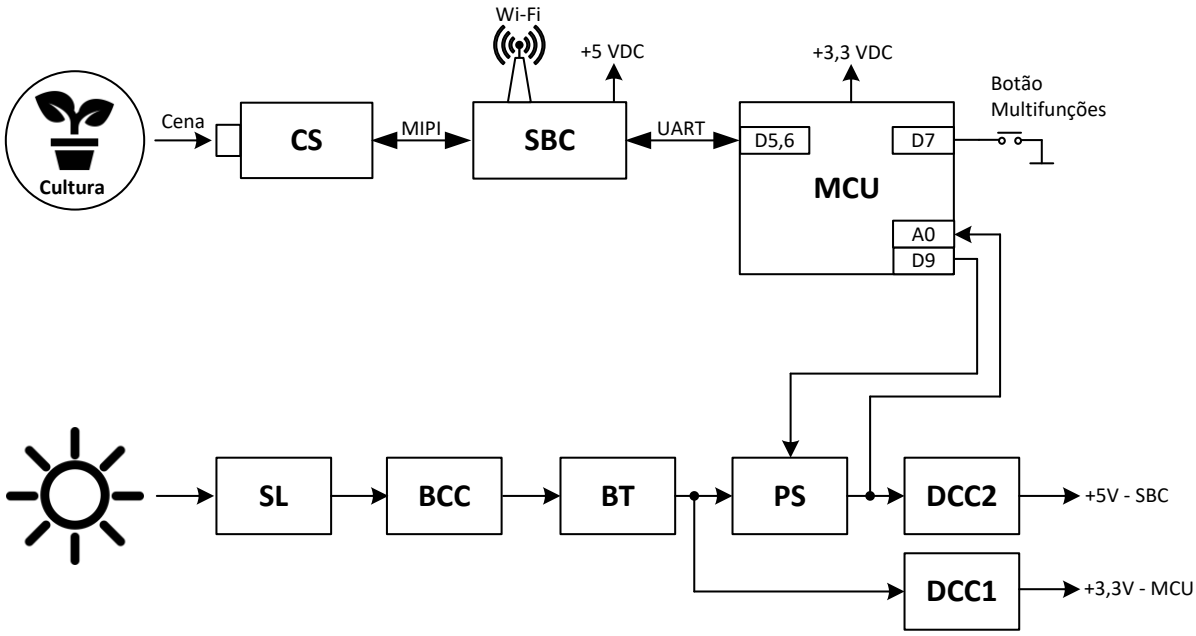

Figura 4.26: Diagrama de blocos do módulo câmara [2].

Tabela 4.5: Componentes de hardware do módulo câmara.

	Descrição	Modelo	Especificações
CS	Sensor de Imagem	RPi Cam. Mod. 2	IMX219, 8Mpx sensor
SBC	Computador numa Placa	RPi 3B+	1.4 GHz, BCM2837, 4GB
MCU	Microcontrolador	MSP430G2553	16 MHz, 16KB/512B
SL	Painel Solar Fotovoltaico	FAL09004	5VDC, 1W, 100x80mm
BCC	Controlador Carga de Bateria	TP4056 Module	1A, 1xBAT Li-Ion
BT	Bateria Li-Ion	INR18650-35E	3.6V, 3500mAh Samsung
PS	Interruptor de Potência	DMP2022LSS	-10A, P-MOSFET
DCC1	Conversor DC/DC	MCP1700-3302E	3.3V, 250mA, LDO
DCC2	Conversor DC/DC	VMA402 Module	5V, 2A, Step-Up LM2577

4.3.1 Escolha de componentes de hardware

Este módulo que partilha alguns dos componentes com as mesmas especificações do módulo lisímetro, sendo, a seguir apresentada a escolha, descrição e justificação dos novos

componentes usados neste módulo.

Componentes apresentados e descritos no módulo lisímetro na Secção [4.2.1]: MCU, SL, BCC, BT, PSW, BVS e DCC1.

CS - Sensor de Imagem

Para capturar a cena foi escolhido a 2ª versão do módulo de câmara Raspberry Pi [19]. Este módulo usa o sensor de imagem IMX219 da *Sony*, com uma resolução de 8Mpx. Este sensor apresenta uma excelente qualidade de imagem, em condições de iluminação exterior diurna. A Figura 4.27 apresenta a imagem deste módulo.

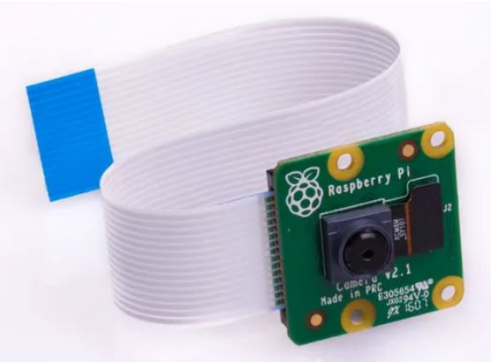

Figura 4.27: Módulo câmara Raspberry Pi V2 [99].

SBC - Computador numa Placa

Para processar as imagens capturadas é necessário um dispositivo com capacidade de processamento elevado e com uma interface para ligação ao módulo de câmara atrás descrito. A escolha recaiu no SBC Raspberry Pi (RPi) 3B+ [20] . Este SBC tem internamente o SoC Broadcom BCM2837B0 com um CPU *Advanced RISC Machine* (ARM) [100] *quad-core*, de 64bits a funcionar a uma frequência de 1,4GHz. Tem enumeras funcionalidades, contudo destaca-se a porta *Camera Serial Interface* (CSI) [101] para ligação da câmara, rede WLAN integrada, e a exposição de 40 pinos *General Purpose Input/Output* (GPIO), necessárias para a implementação deste módulo. A Figura 4.28 apresenta uma imagem do SBC Raspberry Pi 3B+.

[19] Módulo de Câmara RPi V2 - Especificações: https://www.raspberrypi.com/products/camera-module-v2/

[20] RPi 3B+ - Especificações: https://www.raspberrypi.com/products/raspberry-pi-3-model-b-plus/

Figura 4.28: SBC Raspberry Pi 3B+ [102].

DCC2 - Conversor DC/DC SBC

A bateria escolhida tem uma tensão nominal de 3.6V, variando entre os 3.3V, quando descarregada, e 4.2V quando está completamente carregada. No entanto, o SBC Raspberry Pi 3B+ necessita de uma tensão estabilizada de 5V e uma corrente máxima de 2.5A, para isso utilizou-se um conversor DC/DC elevador de tensão para o alimentar. Este conversor é baseado no CI LM2577 [21] é produzido pela *Texas Instruments*. O módulo com a referência VMA402 [22] produzido pela *Velleman* permite o ajuste da tensão de saída e fornecer a corrente necessária ao correto funcionamento do SBC. A Figura 4.29 apresenta a imagem deste módulo.

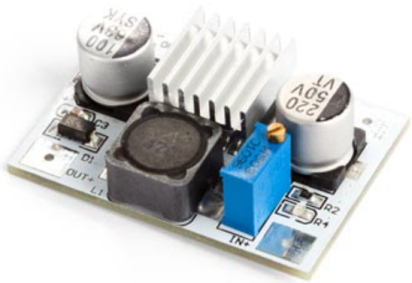

Figura 4.29: Módulo VMA402 - Conversor DC/DC [103].

[21] LM2577 - Especificações:https://www.ti.com/lit/ds/symlink/lm2577.pdf
[22] VMA402 - Especificações:https://www.velleman.eu/products/view?id=435562

4.3.2 Implementação do módulo câmara

A implementação do módulo câmara foi dividida em três partes. Uma parte diz respeito ao software desenvolvido para o MCU MSP430G2553, outra para o software desenvolvido para o SBC *Raspberry Pi*, e por último a concepção do hardware, nomeadamente: a placa de circuito impresso, a instalação dos componentes e respetiva caixa.

Software do MCU

Para o desenvolvimento e teste do código para o MCU, foram usadas a mesmas ferramentas enumeradas no módulo lisímetro, nomeadamente a placa de desenvolvimento MSP-EXP430G2ET [95], e o IDE CCS [96]. A Tabela 4.6 apresenta a listagem dos ficheiros de código implementado no MCU do módulo da câmara.

Tabela 4.6: Código desenvolvido para o MCU do módulo da câmara.

Nome	Descrição	Loc.
main.c	Código principal	I.13
CDC.c	Biblioteca com funções de comunicação e conversão de dados	I.2
delay.h	Biblioteca com funções de atraso de ms e μs segundos	I.3

Neste módulo, o MCU é responsável por fazer a gestão de energia do módulo e monitorizar a tensão da bateria. O circuito para a medição da tensão da bateria é idêntico ao do módulo lisímetro já descrito anteriormente apresentado na Figura 4.13.

Quando o módulo é ligado pela primeira vez, o MCU ativa a porta que controla a alimentação do SBC, sendo programado no MCU o tempo necessário para o SBC fazer o arranque do Sistema Operativo (SO) *Raspberry Pi OS*. Após esse tempo o MCU usa o seu ADC interno fazer a leitura da tensão da bateria e envia essa informação através da porta série para o SBC. Depois disso, o MCU aguarda que o SBC execute e complete as operações que tem predefinidas e faça o encerramento do SO, tornando possível desligar a energia do SBC em segurança. De seguida o MCU calcula o tempo necessário para a próxima leitura de imagem, com base na tabela de leituras, e afeta a variável que guarda o intervalo de tempo entre leituras, entrando de seguida em modo de poupança de energia (LPM). O MCU fica em LPM até ter decorrido o intervalo de tempo predefinido para uma nova aquisição de imagem, ou quando é pressionado o botão multifunções.

O ficheiro *main.c* contém o código principal do MCU, onde está implementada uma máquina de estados com as funcionalidades descritas, que pode ser consultado no Apêndice I.

Software do SBC

Depois de instalar o sistema operativo *Raspberry Pi OS* [104] no SBC, na primeira vez que o SO arranca, é configurada a rede Wi-Fi, é ativada a porta série, a porta CSI da câmara, o serviço *Secure Shell* (SSH), e o auto *login*. Posteriormente foi criada a pasta de trabalho *"lysimeter"* para guardar o código desenvolvido e uma sub-pasta *"image"* para guardar as fotos adquiridas. Depois de atualizar o SO, foi instalado um conjunto de bibliotecas para se ter as funcionalidades pretendidas. A Tabela 4.7 apresenta as bibliotecas instadas e as respetivas funcionalidades.

Tabela 4.7: Bibliotecas instaladas no SBC RPi

Nome	Versão	Descrição	Ref.:
paho-mqtt	1.6.1	Cliente MQTT	[105]
picamera	1.13	Captura de imagem da câmara	[106]
pyserial	3.5	Comunicação com a porta série	[107]

O código para o SBC RPi foi desenvolvido usando a linguagem de programação Python[23], decomposto em cinco *scripts*:

- **start.py** - Código principal [I.14];
- **shutd.py** - Encerra o sistema operativo [I.18];
- **mqtt.py** - Aguarda dados na porta série e envia para a *cloud* via MQTT [I.17];
- **camera.py** - Tira uma fotografia e guarda na pasta *Image* [I.15];
- **copyimage.py** - Envia as imagens da pasta *Image* e envia para o servidor SFTP [I.16] ;

O código *start.py* é executado no arranque do SO com a adição de uma linha para a execução do código *"python /home/pi/lysimeter/start.py"* no ficheiro *.bashrc*. Este *script* começa por tirar uma fotografia executando a função *takePhoto()*, posteriormente envia essa fotografia para o servidor *Secure File Transfer Protocol* (SFTP) ao executar a função *copyImage()*, e envia os dados do estado da câmara num objeto JSON via protocolo MQTT, para a *cloud* com a execução da função *mqtt()*. Terminadas as tarefas é chamada a função *shutd()* para encerrar o sistema operativo.

[23] Python - Linguagem de programação de alto nível [55]

Para enviar as imagens para o servidor SFTP sem necessidade de fazer *login* foi gerado um par de chaves de autenticação pública/privada no SBC e posteriormente guardada no servidor remoto [108].

Hardware

O esquema do circuito elétrico completo do módulo câmara II.2 foi realizado com o software EDA Kicad à semelhança do módulo lisímetro, tendo sido igualmente usado para desenvolver o desenho de uma placa de circuito impresso PCB da Figura II.4 II.3.

A PCB foi produzida pelo processo de fresagem *Computer Numerical Control* (CNC) [109]. Através da conversão do desenho da PCB em código compatível com a CNC (G-Code [24]) para o isolamento das pistas, a furação e o corte foi efetuado com a aplicação FlatCAM [25].

O esquema elétrico do módulo câmara é apresentado no Apêndice II.2, é possível ver o aspecto da parte frontal da PCB simulada no apêndice II.3 e a parte traseira no apêndice II.4

A placa de circuito impresso produzida, juntamente com o SBC RPi, foi instalada dentro de uma caixa IP65 com dimensões de 82.1x158.5x55mm. No seu exterior foi acoplado o painel solar. A Figura 4.30 apresenta o aspeto exterior do módulo câmara.

Figura 4.30: Imagem do exterior do módulo câmara

Para realização deste módulo foi despendido cerca de €120 na aquisição de material e componentes electrónicos necessários. O Apêndice III.2 apresenta um orçamento detalhado dos custos com material para construção do o módulo câmara.

[24] G-Code - Código G, conjunto de instruções compatível com CNC [110]
[25] FlatCAM - Aplicação para conversão de desenhos em formato compatível com CNC [111].

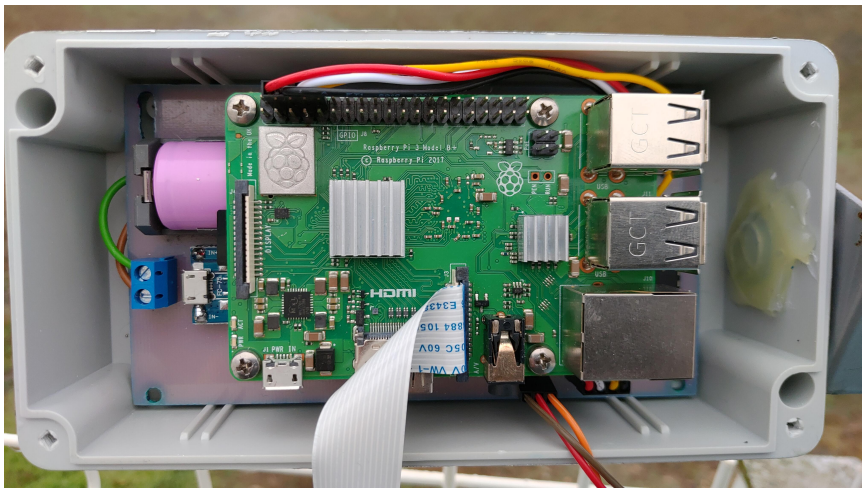

Figura 4.31: Imagem do interior do módulo câmara

4.4 Módulo de Computação na Nuvem

A estrutura de software do módulo computação na nuvem é apresentado na Figura 4.32.

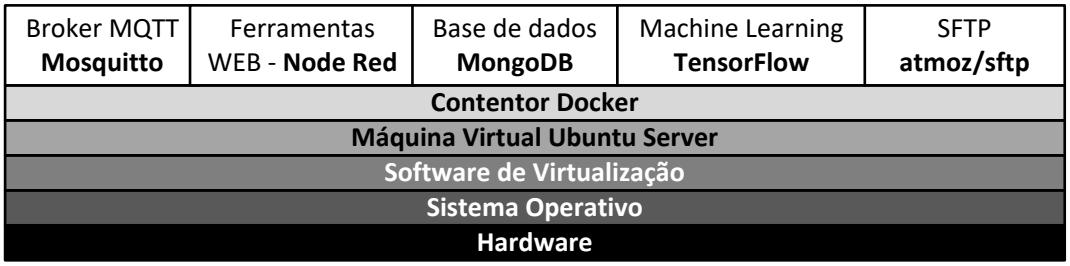

Figura 4.32: Virtualização dos serviços na nuvem [2].

O módulo de computação na nuvem foi implementado numa máquina virtual (*Virtual Machine* (VM) [112]) com o sistema operativo *Ubuntu Server* 20.04 LTS [113]. A utilização de máquinas virtuais permite portabilidade entre sistemas e máquinas físicas de uma maneira rápida e eficiente.

Todos os serviços de software são executados em contentores *Docker* [114], que apresentam as seguintes características:

- Portabilidade de aplicações;
- Isolamento de processos;

- Prevenção de violação externa;
- Gestão do consumo de recursos porque requerem menos recursos que as máquinas virtuais tradicionais usadas na implantação de aplicações isoladas.

A Figura 4.33 apresenta à esquerda a estrutura de um sistema baseado em *dockers* e à direita outro baseado em máquinas virtuais.

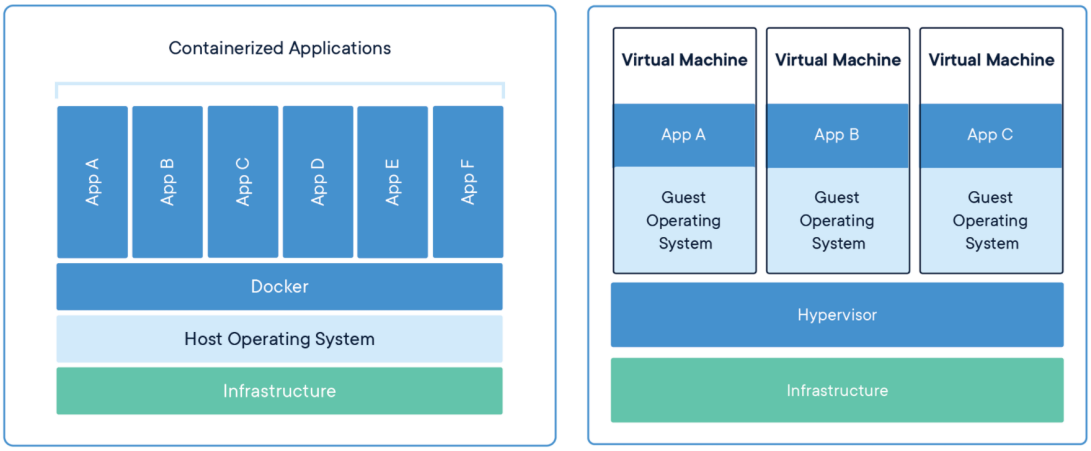

Figura 4.33: Comparativo entre contentores *docker* e máquinas virtuais [114].

Os serviços que estão a correr em *dockers* são os seguintes:

- **Mosquitto** [115] - Broker [26] MQTT.
- **Node-RED** [116] - Ferramenta de programação visual baseada em *Node.js* [117].
- **MongoDB** [118] - Servidor de base de dados não relacional;
- **AT-MOZ** [119] - Servidor de transferência de ficheiros seguro (SFTP);
- **TensorFlow** [120] - Plataforma para *Machine Learning* (ainda não implementado).

O MQTT é um protocolo para troca de mensagens caracterizado por usar pouca largura de banda e recursos de hardware reduzidos. Foi desenvolvido pela IBM e Eurotech na década dos anos 90, seguindo um padrão de publicação/subscrição. Quando um elemento deseja receber informação relacionada com um determinado tema faz uma subscrição ao elemento que gere as publicações e subscrições associadas a esse tema, designado por *Broker*, da mesma forma os elementos que desejam publicar informações podem fazê-lo por

[26] Broker - Elemento responsável por gerir as subscrições/publicações MQTT

intermédio do *Broker*. A Figura 4.34 apresenta o diagrama simplificado do funcionamento do protocolo MQTT.

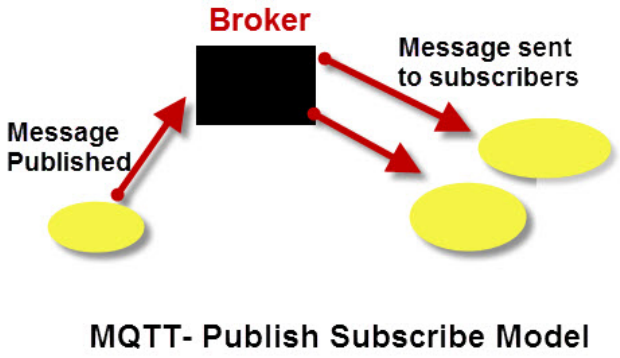

Figura 4.34: Diagrama de funcionamento do protocolo MQTT [121].

No nosso caso prático, os diversos lisímetros fazem publicações dos dados no *Broker* com o tópico "LISIMETRO", o Node-Red faz a subscrição no mesmo tópico para receber os dados. Os lisímetros fazem ligação ao *Broker* através do *Uniform Resource Locator* (URL): `lysimeter.ddnsfree.com` usando a porta 1883.

O *Node-RED* [116] é uma ferramenta de programação visual de código aberto, possui várias APIs e serviços online, tendo sido criado pela *IBM Emerging Technology*. Possui um editor visual que permite arrastar e soltar elementos que trabalha diretamente no navegador (*Browser*).O Node-RED possui vários nós que podem ser arrastados e colocados no ecrã, permitindo programar de forma nativa em *JavaScript* [122], ou outras linguagens de programação através da instalação de pacotes. A Figura 4.35 apresenta o diagrama de fluxo Node-RED do protótipo.

O nó *MQTT* faz a subscrição do tópico "LISIMETRO". Sempre que um lisímetro faz uma publicação no *Broker* esse nó recebe como *payload* um objeto JSON, com os dados do referido lisímetro. Depois o nó *Data* decompõe o objeto JSON nos diversos campos dos sensores através do código em *JavaScript* listado em I.19. Os dados já unificados são enviados para nós do tipo *Dashboard* para posteriormente serem apresentados no painel de visualização. Foram criadas duas páginas para visualização dos dados do lisímetro, que são:

- Indicadores tipo manómetro, com indicação da última leitura enviada pelo lisímetro (Fig. 4.36), com o URL: `http://lysimeter.ddnsfree.com:1880/ui/#!/0`;

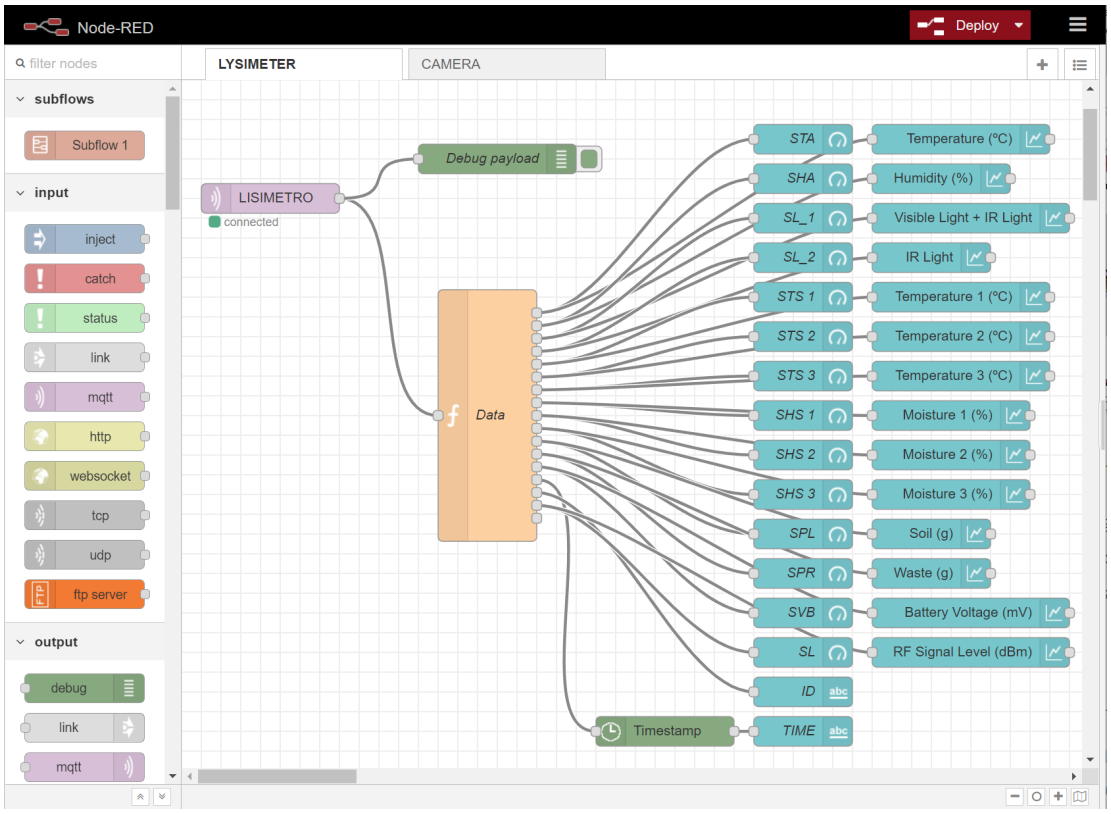

Figura 4.35: Diagrama de fluxo do Node-Red.

- Gráficos com os dados recebidos do lisímetro relativo às ultimas 48H (Figura 4.37), com o URL: `http://lysimeter.ddnsfree.com:1880/ui/#!/1`.

O *mongoDB* [118] é um sistema de gestão de base de dados não relacional, do tipo NoSQL [77], orientado a documentos, de código aberto e multi-plataforma. As bases de dados de documentos ampliam o conceito da base de dados de chave-valor ao organizarem documentos inteiros em coleções. Suportam pares chave-valor alinhados e permitem consultas de qualquer atributo num documento [77]. As principais características do *mongoDB* são: código aberto, elevado desempenho, alta disponibilidade, e escalabilidade automática.

No desenvolvimento do protótipo do lísimetro, o *mongoDB* foi instalado num contentor *docker* para fins de teste, contudo, para explorar ao máximo as características atrás mencionadas, nomeadamente o facto de ser uma base de dados distribuída, é necessário termos um *cluster* [27] com várias máquinas espalhadas numa rede de computadores.

O *AT-MOPS* é um servidor de ficheiros seguro SFTP, com *Open* SSH [124] disponível para instalação num contentor (*container*). Este servidor é compatível com acesso através

[27] Cluster - Conjunto de máquinas a trabalhar na mesma tarefa [123]

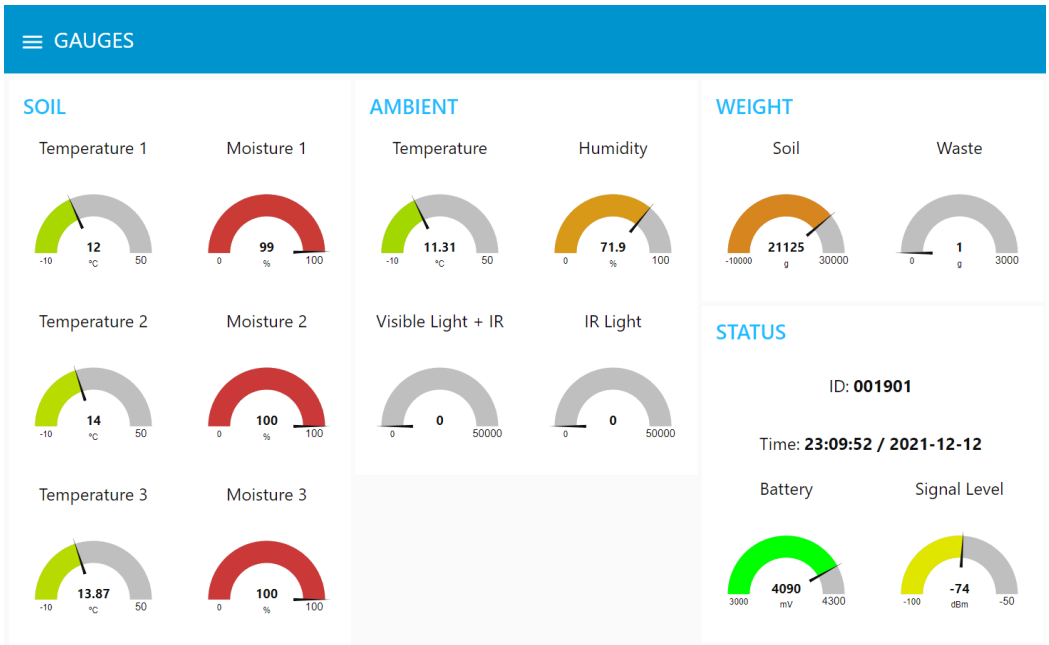

Figura 4.36: Painel de indicadores dos sensores do lisímetro.

de chave pública/privada (*Rivest-Shamir-Adleman* (RSA) [125]). O acesso ao servidor SFTP sem necessidade de autenticação por utilizador e palavra-passe é necessário para que o módulo câmara possa enviar as imagens capturadas para o servidor. No SBC do módulo câmara são geradas as chaves RSA (pública e privada), e depois a chave pública é copiada para o servidor SFTP. Lista de comandos usados para configurar o acesso ao servidor através de chaves RSA:

```
# Verifica se existe alguma chave
ls -al ~/.ssh/id_*.pub
# Gera um par de chaves RSA
ssh-keygen -t rsa -b 4096 -C "18510@stu.ipbeja.pt"
# Copia chave publica para o servidor
ssh-copy-id lisimetro@lysimeter.ddnsfree.com
# Testar a ligação SSH sem password
ssh lisimetro@lysimeter.ddnsfree.com
# Sair do SSH
exit
```

Figura 4.37: Painel com gráficos das últimas 48h dos sensores do lisímetro.

4.5 Estrutura de Suporte

De modo albergar os 3 vasos do lisímetro como representado na Figura 3.1, foi necessário dimensionar uma estrutura metálica de suporte. A dimensão desta estrutura pode ser ajustada em função da cultura pretendida e das dimensões o lisímetro. No caso, a estrutura foi dimensionada para uma cultura de morangueiros em vaso.

Para a colocação das plantas com o respetivo solo, foi usado um vaso cónico com as dimensões de 350x300mm (DxA) de polietileno. A colocação dos sensores de temperatura e humidade no vaso do solo foram feitas através de perfurações nas profundidades pretendidas. Para a retenção da água drenada foi utilizado um recipiente plástico cilíndrico com as dimensões de 200x120mm (DxA). Na fase de testes do protótipo não foram realizadas análises químicas à água drenada, como tal não foi usado o vaso inferior.

A partir das medidas dos vasos, foi dimensionado as medidas da estrutura. A Figura 4.38 apresenta as medidas da estrutura usada no protótipo, com os respectivos vasos.

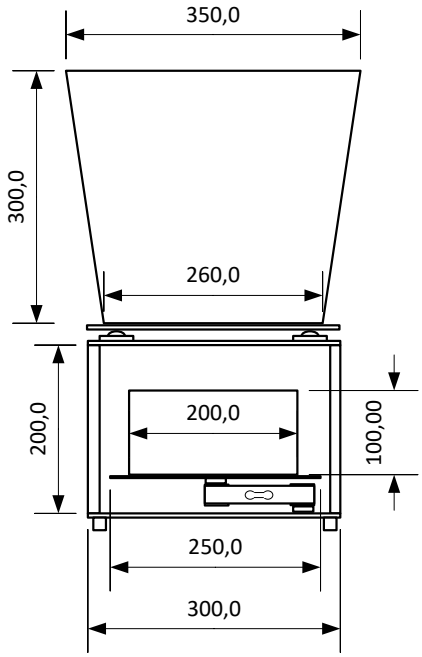

Figura 4.38: Medidas da Estrutura do Lisímetro [mm].

A estrutura foi produzida com tubos e chapa de aço galvanizado, unidas por meio de soldadura de arco elétrico, acabado com pintura. Para a construção de futuras estruturas é desejável a utilização de aço inox, para evitar a oxidação, nomeadamente junto aos pontos de soldadura, o que permite aumentar a longevidade da estrutura.

4.6 Aspetos Experimentais

Ao longo da implementação do protótipo procederam-se a diversas alterações do projeto de forma a corrigir alguns problemas e também a melhorar as características do lisímetro.

4.6.1 Construção do protótipo

Os circuitos eléctricos dos módulos foram desenhados no KiCad [126] e concretizados em placas de circuito impresso. Estas placas de circuito impresso, juntamente com os restantes componentes/módulos, foram alojados em caixas com certificação IP65 [28]. A passagem dos cabos foi efetuada através de bucins que asseguram o mesmo índice de proteção das caixas.

[28] IP65 - Índice de proteção de elementos sólidos e líquidos [127]

As figuras 4.24, 4.25, 4.30, 4.31 apresentadas anteriormente evidenciam os pormenores de construção descritos.

4.6.2 Gestão de energia

Desde o início existiu uma preocupação com a gestão de energia. Sendo o protótipo alimentado por energia solar, pretende-se o seu funcionamento mesmo após vários dias sem sol.

O módulo lisímetro em funcionamento possui um consumo de corrente máximo de $320mA$ em quando está a transmitir dados, a bateria de Li-Ion tem uma tensão nominal de $3.6V$, e são necessários cerca de $20s$ para obter os dados dos sensores e fazer a sua os transmissão para a *cloud*. Os valores de corrente, foram obtidos através de medições no protótipo. A Figura 4.39 apresenta o cálculo da energia diária do módulo lisímetro.

Consumo de energia diário	
Intervalo entre leituras	10 min
Leituras por hora	6
Leituras por dia	144
Tempo em func. por leitura	20 s
Tempo em func. por dia	2880 s
	48 min
	0,8 h
Consumo corrente em LPM	0,3 mA
Consumo corrente em funcionamento	320 mA
Tensão da bateria média	3,6 V
Potência consumida em funcionamento	1,152 W
Potência consumida em LPM	0,0011 W
Energia consumida em funcionamento	0,9216 Wh
Energia consumida em LPM	0,0251 Wh
Consumo de Energia total por dia	**0,9467 Wh**

Painel Solar	
Energia	1 Wh
Tempo exposição solar	4 h/d
Energia produzida por dia	**4 Wh**

Bateria 18650	
Tensão média	3,6 V
Capacidade	3500 mAh
Energia	**12,6 Wh**

Tempo funcionamneto sem painel solar	**13,3 dias**

Figura 4.39: Cálculo da energia diária do módulo lisímetro.

O módulo câmara em funcionamento tem um consumo de corrente máximo de $1580mA$ em operação. Possui uma bateria com uma tensão média de $3.6V$, e necessita de $60s$ para iniciar o SO, tirar a fotografia, e enviar para o servidor SFTP. A Figura 4.40 apresenta o cálculo da energia diária do módulo lisímetro.

Esta folha de cálculo permite, de uma forma simples estimar a autonomia dos módulos na ausência de luz solar. Como o cálculo é feito com base no consumo de corrente máximo dos módulos, os valores das autonomias reais serão sempre maiores.

A folha de cálculo também apresenta uma estimativa da energia produzida por dia pelo painel solar, considerando um tempo de exposição de 4h diárias (Inverno), desta forma é

Consumo de energia diário	
Leituras por dia	3
Tempo em func. por leitura	60 s
Tempo em func. por dia	180 s
	3 m
	0,05 h
Consumo corrente em LPM	0,3 mA
Consumo corrente em funcionamento	1580 mA
Tensão da bateria média	3,6 V
Potência consumida em funcionamento	5,688 W
Potência consumida em LPM	0,0011 W
Energia consumida em funcionamento	0,2844 Wh
Energia consumida em LPM	0,0259 Wh
Consumo de Energia total por dia	**0,3103 Wh**

Painel Solar	
Energia	1 Wh
Tempo exposição solar	4 h/d
Energia produzida por dia	**4 Wh**

Bateria 18650	
Tensão média	3,6 V
Capacidade	3500 mAh
Energia	**12,6 Wh**

Tempo funcionamneto sem painel solar	**40,6 dias**

Figura 4.40: Cálculo da energia diária do módulo câmara.

possível inferir se a produção de energia no inverno é suficiente para manter o módulo em funcionamento. Em qualquer dos casos a energia produzida diária é quatro vezes superior à necessária.

O tempo de funcionamento sem painel solar é calculado em função do consumo de energia diário e da capacidade da bateria utilizada. Os cálculos apresentados nas figuras anteriores usam uma bateria com uma capacidade de $3500mAh$, sendo possível alterar a capacidade da bateria e obter novos valores.

Para comprovar os cálculos apresentados foi desligado o módulo lisímetro em 25/09/2021 pelas 20h00, em que a tensão da bateria era de $4.2V$, apresentando-se completamente carregada. O sistema ficou a funcionar até a carga da bateria rondar os 30%, no dia 12/10/2021 pelas 9h15 verificou-se que a tensão da bateria era de $3.42V$, tendo sido reposto a ligação do painel solar. Assim, foi possível comprovar uma autonomia de cerca de 16,5 dias. A bateria recuperou a carga máxima passado 3 dias, de acordo com o valor também expectável considerando o painel e a bateria usados.

4.6.3 Visualização dos dados

Os valores dos dados enviados pelo lisímetro são visualizados num painel usando um cliente com navegador WEB (Fig.: 4.36). Os valores recolhidos durante um período de 2 dias são disponibilizados em forma de gráfico, para poder inferir a evolução e tendência das grandezas (Fig.: 4.37).

O serviço WEB é compatível com a moderna tecnologia *Progressive Web App* (PWA) [128], sendo possível aceder aos dados do lisímetro a partir de qualquer dispositivo móvel através

de uma interface similar de aplicativo para *Smartphone*. A Figura 4.41 apresenta a imagem dos dados dos sensores num *Smartphone*.

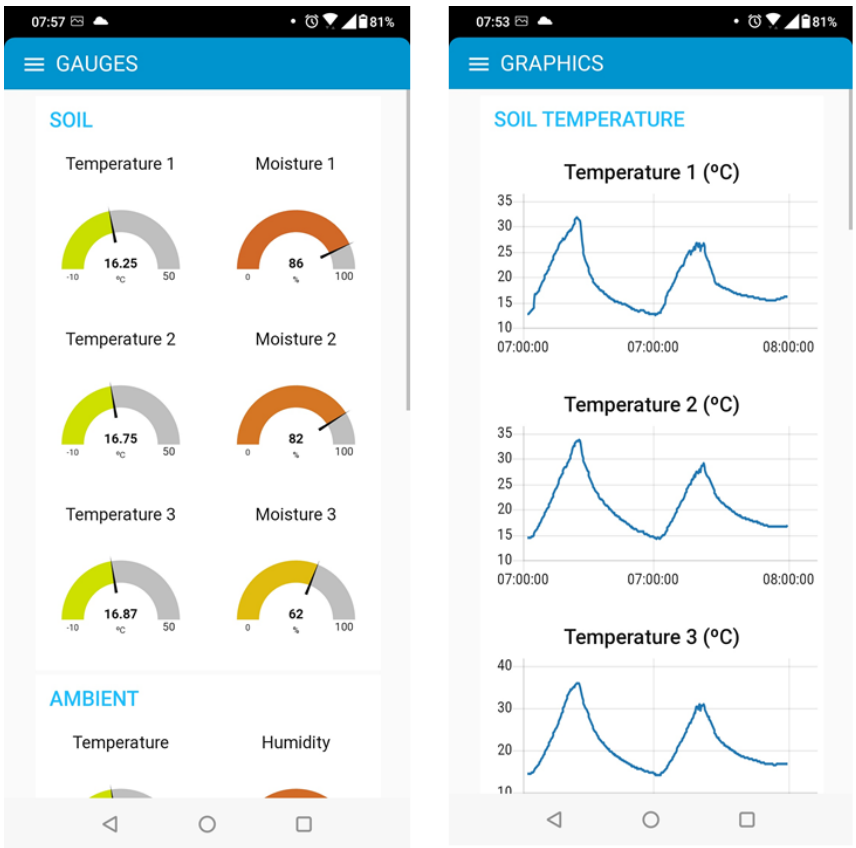

Figura 4.41: Dados dos sensores apresentados num *Smartphone*.

As imagens capturadas e enviadas para o servidor SFTP, podem ser acedidas através de um cliente SFTP, nomeadamente a aplicação *FileZilla* [129], através do URL: `lysimeter.ddnsfree.com`.

A Figura 4.42 apresenta uma imagem de alta resolução das plantas, adquirida pelo módulo câmara, à direita é apresentada uma imagem detalhada do fruto onde é possível detectar o estado das plantas a olho nu. No entanto, o objetivo futuro é ter um sistema baseado em ML a funcionar na nuvem, capaz de detetar o estado dos frutos, as possíveis doenças das plantas, e disparar automaticamente um aviso e enviar um alerta aos utilizadores pré-definidos através de e-mail ou *Short Message Service* (SMS).

Figura 4.42: Direita: Exemplo de uma imagem capturada, Esquerda: Detalhe da imagem ampliada.

4.7 Conclusão

O protótipo de lisímetro apresentado exemplifica a aplicação do paradigma IoT na resolução de um problema comum e fundamental na agricultura, a medição do equilíbrio evaporação-transpiração.

Vários outros parâmetros físicos do solo e ambientes são medidos, assim como um conjunto de imagens para monitorizar a evolução das plantas. Estes dados podem ser usados para detectar doenças e pragas usando um sistema baseado em *Machine Learning*.

Os módulos lisímetro e câmara superaram a autonomia calculada, o que indica que o consumo de energia é inferior ao estimado.

O sistema de lisímetro proposto oferece uma solução integrada de baixo custo e eficiência energética para a medição da evapotranspiração, que pode ser usada em diferentes locais e cenários, nomeadamente diferentes culturas.

O servidor WEB com tecnologia PWA permite um acesso ao sistema de uma forma transversal, sendo possível aceder aos dados do lisímetro a partir de qualquer dispositivo móvel através de uma interface similar de aplicativo para *Smartphone*.

A ferramenta de programação visual Node-RED, além de criar um *Dashboard* num página WEB com a visualização dos dados lisímetro, permite fazer *Debug* das comunicações, nomeadamente ver o *Payload* das mensagens enviados pelo lisímetro.

Capítulo 5

Conclusões

Neste capítulo são apresentadas as conclusões gerais e as perspetivas de desenvolvimento futuro.

5.1 Conclusões gerais

O protótipo de lisímetro apresentado exemplifica a aplicação do paradigma IoT na resolução de um problema comum e fundamental na agricultura: a medição do equilíbrio hídrico evaporação-transpiração. Adicionalmente, são medidos parâmetros físicos do solo e do meio ambiente, sendo feita a aquisição de imagens das plantas com o objetivo de monitorizar a evolução da cultura. Estes dados podem ser usados para alimentar um sistema, baseado em ML, para deteção de doenças e pragas e predição do rendimento. O estudo realizado permite concluir que é possível desenvolver sistemas para detecção de doenças e pragas em plantas recorrendo a hardware de baixo custo.

A arquitetura proposta foi o ponto de partida para a construção de um protótipo funcional para recolha de dados da ET, do solo e do meio ambiente. A abordagem IoT permite redução de custos, elevado desempenho, escalabilidade e eficiência energética.

A arquitetura é composta por dois módulos independentes: o módulo lisímetro e o módulo câmara que, por estarem na maior parte do tempo em modo de poupança de energia LPM, são eficientes do ponto de vista energético, e podem trabalhar em condições ambientais de temperatura e humidade extremas.

O objetivo desta arquitetura é permitir a monitorização contínua da cultura com o consequente aumento da produtividade das culturas, redução do consumo de água, dado que é possível calcular a quantidade exata de água que uma determinada planta necessita.

Este lísimetro permite de forma autónoma, e automática, a recolha em contínuo de dados para alimentar sistemas de ML/*Artificial Intelligence* (AI), que são caracterizados por necessitarem de grandes quantidades de dados de treino de modo a alcançarem uma precisão elevada. Para otimizar os resultados é importante que os agricultores possam interagir com o sistema através de uma página WEB, registando na plataforma a sua análise, porventura mais experiente, da cultura sempre que sejam feitas visitas.

A conjugação de dados proveniente dos sensores de lisímetros inteligentes, do tipo proposto e desenvolvido, com o processamento das imagens adquiridas pela câmara numa rede neural convolucional irá permitir maior precisão e fiabilidade na detecção e prevenção de doenças e pragas em plantas, assim como aprofundar o estudo da evolução das plantas em função dos parâmetros ambientais.

Assim, o desenvolvimento e construção de um protótipo funcional permitiu comprovar a arquitetura proposta, sendo o primeiro passo para a construção de um sistema completo para monitorização das culturas.

O sistema de lisímetro proposto compreende os sistemas completos de aquisição de dados, comunicação para a *Cloud*, armazenamento em base de dados e visualização remota dos dados, consistindo numa solução integrada de baixo custo e eficiência energética para a medição da evapotranspiração, que pode ser usado em diferentes locais e cenários, e com diferentes culturas. É um sistema escalável em duas vertentes: o lisímetro é escalável em termos da sua dimensão e tipo de cultura, e todo o sistema computacional pode receber, armazenar e tratar dados de um grande número de lisímetros.

O servidor WEB com tecnologia PWA permite um acesso ao sistema de uma forma transversal, sendo possível aceder aos dados do lisímetro a partir de qualquer dispositivo móvel através de uma interface similar de aplicativo para *Smartphone*.

Os módulos lisímetro e câmara superaram a autonomia energética dimensionada, o que indica que o consumo de energia é inferior ao estimado, tendo cumprido todos os requisitos de projeto e superado todos os testes realizados, estando em modo de produção já há alguns meses.

5.2 Desenvolvimento Futuro

Um próximo estágio de desenvolvimento deste projeto será a colocação de diversos lisímetros em modo de produção com vista à recolha de um grande conjunto de dados: imagens e dados dos sensores, de monitorização da cultura e do solo para desenvolver e treinar um modelo de ML para inferir do estado de desenvolvimento das plantas e se existem problemas

relacionados com o desenvolvimento da cultura, nomeadamente deteção do aparecimento de doenças e pragas.

As pesquisas realizadas permitem inferir que quando necessitamos de uma estimativa precisa da ET, devemos recorrer a um lisímetro de pesagem dado ser preciso, robusto e fácil de construir, tal como o desenvolvido. Inclusive, os sistemas que recorrem a ML para estimar a ET usam lisímetros de pesagem para a sua calibração. Relativamente ao estudo de sistemas de aquisição e processamento de imagens na agricultura, os sistemas com maior precisão são baseados no método de redes neuronais convolucionais CNN. A evolução das redes neuronais, nomeadamente as DCNN, nos últimos cinco anos permitem criar sistemas mais precisos, e com menor necessidade de ajustes. No entanto, a bibliografia sobre o assunto mostra que é muito difícil criar um sistema universal para detecção de doenças em plantas. Para se obter bons níveis de precisão e rapidez devemos ajustar os sistemas para cada tipo de cultura e planta específica.

Também está planeado a integração do lisímetro num sistema geral de monitorização de recursos hídricos, que reúne informação de diversas fontes, incluindo estações meteorológicas, sistemas de monitorização da qualidade da água, sistemas de monitorização da evaporação da água, sistemas de monitorização do nível da água de lagos e rios, etc., o que permitirá ter um sistema completo para monitorizar a gestão da água. Está previsto que este sistema integrado também forneça dados a um modelo de dados baseado em sistemas de reconhecimento de padrões ML e/ou algoritmos de inteligência artificial que permitam relacionar todos estes dados a fim de prever eventos e prevenir ameaças de longo prazo associados com os recursos hídricos.

Outra vertente a ser desenvolvida consiste na implementação de mecanismos de segurança ao nível do acesso, transmissão, e armazenamento dos dados, nomeadamente, recorrendo a mecanismos de encriptação do tipo *blockchain*.

Bibliografia

[1] Água. [*Online*]. Disponível: https://unric.org/pt/agua/

[2] Carlos Almeida, João Miguel Santos, João C. Martins, e José Jasnau Caeiro, "Smart Lysimeter with Crop and Environment Monitoring: Enhanced with Pest and Crop Control," in *4th IFIP International Internet of Things (IoT) Conference*, Novembro 2021.

[3] "Lisímetro," Junho 2019, page Version ID: 55578825. [*Online*]. Disponível: https://pt.wikipedia.org/w/index.php?title=Lis%C3%ADmetro&oldid=55578825

[4] G. Vitali, M. Francia, M. Golfarelli, e M. Canavari, "Crop management with the IoT: An interdisciplinary survey," *Agronomy*, vol. 11, n. 1, p. 181, 2021, number: 1 Publisher: Multidisciplinary Digital Publishing Institute. [*Online*]. Disponível: https://www.mdpi.com/2073-4395/11/1/181

[5] W. Zhu, Y. Tian, e S. Wang, "Design of non-weighing type desert plant lysimeter observation system based on PIC18," in *2013 6th International Conference on Information Management, Innovation Management and Industrial Engineering*, vol. 3, 2013, pp. 42–44, ISSN: 2155-1472.

[6] "Microcontroller," Junho 2021, page Version ID: 1027668018. [*Online*]. Disponível: https://en.wikipedia.org/w/index.php?title=Microcontroller&oldid=1027668018

[7] G. Yang, C. Zhao, e Q. Xu, "Spatial-temporal analysis of field evapotranspiration based on complementary relationship model and IKONOS data," in *2013 IEEE International Geoscience and Remote Sensing Symposium - IGARSS*, 2013, pp. 2836–2839, ISSN: 2153-7003.

[8] J. A. Hernández-Salazar, D. Hernández-Rodríguez, R. A. Hernández-Cruz, J. C. Ramos-Fernández, M. A. Márquez-Vera, e F. R. Trejo-Macotela, "Estimation of

the evapotranspiration using ANFIS algorithm for agricultural production in greenhouse," in *2019 IEEE International Conference on Applied Science and Advanced Technology (iCASAT)*, 2019, pp. 1–5.

[9] L. Ávila Dávila, M. Soler-Méndez, C. F. Bautista-Capetillo, J. González-Trinidad, H. E. Júnez-Ferreira, C. O. Robles Rovelo, e J. M. Molina-Martínez, "A compact weighing lysimeter to estimate the water infiltration rate in agricultural soils," *Agronomy 2021*, vol. 11, n. 1, p. 180, 2021, number: 1 Publisher: Multidisciplinary Digital Publishing Institute. [*Online*]. Disponível: https://www.mdpi.com/2073-4395/11/1/180

[10] E. Mavridou, E. Vrochidou, G. A. Papakostas, T. Pachidis, e V. G. Kaburlasos, "Machine vision systems in precision agriculture for crop farming," *Journal of Imaging*, vol. 5, n. 12, p. 89, 2019.

[11] A. Agarwal e B. Triggs, "Hyperfeatures – multilevel local coding for visual recognition," in *Computer Vision – ECCV 2006*. Springer Berlin Heidelberg, 2006, pp. 30–43.

[12] D. Foley, "Gaussian Mixture Modelling (GMM)," Janeiro 2021. [*Online*]. Disponível: https://towardsdatascience.com/gaussian-mixture-modelling-gmm-833c88587c7f

[13] "Mia Tutorial: Machine Learning Model Deployment on Mia," Junho 2021. [*Online*]. Disponível: https://omdena.com/blog/mia-tutorial/

[14] "PCA (Principal Component Analysis) Machine Learning Tutorial." [*Online*]. Disponível: https://www.projectpro.io/data-science-in-python-tutorial/principal-component-analysis-tutorial

[15] Wikipédia, "Artificial neural network," Website:, Janeiro 2020. [*Online*]. Disponível: https://en.wikipedia.org/wiki/Artificial_neural_network

[16] R. Gandhi, "Support Vector Machine — Introduction to Machine Learning Algorithms," Julho 2018. [*Online*]. Disponível: https://towardsdatascience.com/support-vector-machine-introduction-to-machine-learning-algorithms-934a444fca47

[17] G. G. Hungilo, G. Emmanuel, e A. W. R. Emanuel, "Image processing techniques for detecting and classification of plant disease," in *Proceedings of the 2019 International Conference on Intelligent Medicine and Image Processing - IMIP '19*. ACM Press, 2019.

[18] Wikipédia, "Convolutional neural network," Website:, Janeiro 2020. [*Online*]. Disponível: https://en.wikipedia.org/wiki/Convolutional_neural_network

[19] "Otsu's method," Outubro 2021, page Version ID: 1051475285. [*Online*]. Disponível: https://en.wikipedia.org/w/index.php?title=Otsu%27s_method&oldid=1051475285

[20] "K Means Clustering | K Means Clustering Algorithm in Python," Agosto 2019. [*Online*]. Disponível: https://www.analyticsvidhya.com/blog/2019/08/comprehensive-guide-k-means-clustering/

[21] "RGB color model," Dezembro 2021, page Version ID: 1061131512. [*Online*]. Disponível: https://en.wikipedia.org/w/index.php?title=RGB_color_model&oldid=1061131512

[22] "HSL and HSV," Dezembro 2021, page Version ID: 1059079850. [*Online*]. Disponível: https://en.wikipedia.org/w/index.php?title=HSL_and_HSV&oldid=1059079850

[23] B. Malinga, D. Raicu, e J. Furst, "Local vs. Global Histogram-Based Color Image Clustering."

[24] "Local Binary Pattern - an overview | ScienceDirect Topics." [*Online*]. Disponível: https://www.sciencedirect.com/topics/engineering/local-binary-pattern

[25] T. Mamdouh, "Image Retrieval: Color Coherence Vector." [*Online*]. Disponível: https://owlcation.com/stem/Image-Retrieval-Color-Coherence-Vector

[26] O. B. Sassi, "Improved Spatial Gray Level Dependence Matrices for Texture Analysis," *International Journal of Computer Science and Information Technology*, vol. 4, n. 6, pp. 209–219, Dezembro 2012. [*Online*]. Disponível: http://www.airccse.org/journal/jcsit/4612ijcsit15.pdf

[27] "Learn Naive Bayes Algorithm | Naive Bayes Classifier Examples," Setembro 2017. [*Online*]. Disponível: https://www.analyticsvidhya.com/blog/2017/09/naive-bayes-explained/

[28] G. says, "Decision Tree Algorithm, Explained," section: 2020 Jan Tutorials, Overviews. [*Online*]. Disponível: https://www.kdnuggets.com/decision-tree-algorithm-explained.html/

[29] "Random Forest Algorithms: A Complete Guide | Built In." [*Online*]. Disponível: https://builtin.com/data-science/random-forest-algorithm

[30] B. S. Kusumo, A. Heryana, O. Mahendra, e H. F. Pardede, "Machine learning-based for automatic detection of corn-plant diseases using image processing," in *Proc. Informatics and its Applications (IC3INA) 2018 Int. Conf. Computer, Control*, Novembro 2018, pp. 93–97.

[31] D. G. Lowe, "Method and apparatus for identifying scale invariant features in an image and use of same for locating an object in an image," US patentus US6 711 293B1, 2000.

[32] C. Tomasi, "Histograms of oriented gradients," Computer Vision Sampler, pp. 1–6, 2012.

[33] E. Rublee, V. Rabaud, K. Konolige, e G. Bradski, "ORB: An efficient alternative to SIFT or SURF," in *2011 International Conference on Computer Vision*. IEEE, 11 2011.

[34] J. D. S. Selda, R. M. R. Ellera, L. C. Cajayon, e N. B. Linsangan, "Plant identification by image processing of leaf veins," in *Proceedings of the International Conference on Imaging, Signal Processing and Communication - ICISPC 2017*. ACM Press, 2017.

[35] Wikipedia, "Sensitivity and specificity," Website, Janeiro 2020. [*Online*]. Disponível: https://en.wikipedia.org/wiki/Sensitivity_and_specificity

[36] E. Mwebaze e G. Owomugisha, "Machine learning for plant disease incidence and severity measurements from leaf images," in *Proc. 15th IEEE Int. Conf. Machine Learning and Applications (ICMLA)*, Dezembro 2016, pp. 158–163.

[37] "1.4. Support Vector Machines." [*Online*]. Disponível: https://scikit-learn/stable/modules/svm.html

[38] "KNN Algorithm | What is KNN Algorithm | How does KNN Function," Abril 2021. [*Online*]. Disponível: https://www.analyticsvidhya.com/blog/2021/04/simple-understanding-and-implementation-of-knn-algorithm/

[39] J. Brownlee, "How to Develop an Extra Trees Ensemble with Python," Abril 2020. [*Online*]. Disponível: https://machinelearningmastery.com/extra-trees-ensemble-with-python/

[40] R. P. Foundation, "Raspberry pi - about us," Website, Janeiro 2020. [*Online*]. Disponível: https://www.raspberrypi.org/about/

[41] F. Jakjoud, A. Hatim, e A. Bouaaddi, "Deep learning application for plant diseases detection," in *Proceedings of the 4th International Conference on Big Data and Internet of Things*. ACM, 10 2019.

[42] A. Kamilaris e F. X. Prenafeta-Boldú, "Deep learning in agriculture: A survey," *Computers and Electronics in Agriculture*, vol. 147, pp. 70–90, 4 2018.

[43] "Vgg16 – convolutional network for classification and detection," Website:, Janeiro 2020. [*Online*]. Disponível: https://neurohive.io/en/popular-networks/vgg16/

[44] "1.5. Stochastic Gradient Descent." [*Online*]. Disponível: https://scikit-learn/stable/modules/sgd.html

[45] R. Gylberth, "An Introduction to AdaGrad," Maio 2018. [*Online*]. Disponível: https://medium.com/konvergen/an-introduction-to-adagrad-f130ae871827

[46] "Root Mean Square Propagation - Andrea Perlato." [*Online*]. Disponível: https://www.andreaperlato.com/aipost/root-mean-square-propagation/

[47] neuralthreads, "Adadelta — Optimizer which was developed to eliminate the need for the learning rate," Novembro 2021. [*Online*]. Disponível: https://medium.com/@neuralthreads/adadelta-optimizer-which-was-developed-to-eliminate-the-need-for-the-learning-rate-93e8f295ab

[48] D. Majumdar, D. K. Kole, A. Chakraborty, e D. D. Majumder, "An integrated digital image analysis system for detection, recognition and diagnosis of disease in wheat leaves," in *Proceedings of the Third International Symposium on Women in Computing and Informatics - WCI '15*. ACM Press, 2015.

[49] A. Gupta, "Fuzzy C-Means Clustering (FCM) Algorithm in Machine Learning," Junho 2021. [*Online*]. Disponível: https://medium.com/geekculture/fuzzy-c-means-clustering-fcm-algorithm-in-machine-learning-c2e51e586fff

[50] J. Krause, G. Sugita, K. Baek, e L. Lim, "WTPlant(what's that plant?)," in *Proceedings of the 2018 ACM on International Conference on Multimedia Retrieval - ICMR '18*. ACM Press, 2018.

[51] S. A. Pearline, V. S. Kumar, e S. Harini, "A study on plant recognition using conventional image processing and deep learning approaches," *Journal of Intelligent & Fuzzy Systems*, vol. 36, n. 3, pp. 1997–2004, 3 2019.

[52] "UCI Machine Learning Repository: Folio Data Set." [*Online*]. Disponível: https://archive.ics.uci.edu/ml/datasets/Folio

[53] O. J. O. Söderkvist, "Computer vision classifcation of leaves from swedish trees," Website, Janeiro 2020. [*Online*]. Disponível: https://www.cvl.isy.liu.se/en/research/datasets/swedish-leaf/

[54] "Flavia, A Leaf Recognition Algorithm for Plant Classification using PNN." [*Online*]. Disponível: http://flavia.sourceforge.net/

[55] "Python.org." [*Online*]. Disponível: https://www.python.org/about/

[56] "Opencv (open source computer vision library)," Website, Janeiro 2020. [*Online*]. Disponível: https://opencv.org/about/

[57] "Keras: The python deep learning library," Website:, Janeiro 2020. [*Online*]. Disponível: https://keras.io/

[58] "Theano is a python library that allows you to define, optimize, and evaluate mathematical expressions involving multi-dimensional arrays efficiently," Website:, Janeiro 2020. [*Online*]. Disponível: http://deeplearning.net/software/theano/

[59] D. K. Sreekantha e Kavya A. M. , "Agricultural crop monitoring using iot - a study," in *Proc. 11th Int. Conf. Intelligent Systems and Control (ISCO)*, Janeiro 2017, pp. 134–139.

[60] Wikipédia, "Wireless sensor network - wsn," website, Janeiro 2020. [*Online*]. Disponível: https://en.wikipedia.org/wiki/Wireless_sensor_network

[61] zigbee alliance, "What is zigbee?" website, Janeiro 2020. [*Online*]. Disponível: https://zigbeealliance.org/solution/zigbee/

[62] "Radio Frequency Identification (RFID)." [*Online*]. Disponível: https://www.investopedia.com/terms/r/radio-frequency-identification-rfid.asp

[63] "General Packet Radio Service," Novembro 2021, page Version ID: 1055785300. [*Online*]. Disponível: https://en.wikipedia.org/w/index.php?title=General_Packet_Radio_Service&oldid=1055785300

[64] Wikipédia, "Wi-fi," Website, Janeiro 2020. [*Online*]. Disponível: https://en.wikipedia.org/wiki/General_Packet_Radio_Service

[65] P. Tirelli, N. A. Borghese, F. Pedersini, G. Galassi, e R. Oberti, "Automatic monitoring of pest insects traps by zigbee-based wireless networking of image sensors," in *Proc. IEEE Int. Instrumentation and Measurement Technology Conf*, Maio 2011, pp. 1–5.

[66] T. Sakamoto, A. A. Gitelson, A. L. Nguy-Robertson, T. J. Arkebauer, B. D. Wardlow, A. E. Suyker, S. B. Verma, e M. Shibayama, "An alternative method using digital cameras for continuous monitoring of crop status," *Agricultural and Forest Meteorology*, vol. 154-155, pp. 113–126, 2012. [*Online*]. Disponível: https://www.sciencedirect.com/science/article/pii/S0168192311003133

[67] GISGeography, "What is NDVI (Normalized Difference Vegetation Index)?" Maio 2017. [*Online*]. Disponível: https://gisgeography.com/ndvi-normalized-difference-vegetation-index/

[68] Wikipédia, "Machine learning," Website, Janeiro 2020. [*Online*]. Disponível: https://en.wikipedia.org/wiki/Machine_learning

[69] ——, "Deep learning," Website, Janeiro 2020. [*Online*]. Disponível: https://en.wikipedia.org/wiki/Deep_learning

[70] "System-on-a-chip," Maio 2020, page Version ID: 58370125. [*Online*]. Disponível: https://pt.wikipedia.org/w/index.php?title=System-on-a-chip&oldid=58370125

[71] C. Hernitscheck e F. Europe, "Designing for Ultra-Low-Power with MSP430," *MSP430 Advanced Tehnical Conference 2006*, p. 37, 2006. [*Online*]. Disponível: https://www.ti.com/lit/ml/slap124/slap124.pdf

[72] "Network Time Protocol," Abril 2020, page Version ID: 58071828. [*Online*]. Disponível: https://pt.wikipedia.org/w/index.php?title=Network_Time_Protocol&oldid=58071828

[73] "Single-board computer," Abril 2021, page Version ID: 1018888075. [*Online*]. Disponível: https://en.wikipedia.org/w/index.php?title=Single-board_computer&oldid=1018888075

[74] "World Wide Web," Outubro 2021, page Version ID: 1048690604. [*Online*]. Disponível: https://en.wikipedia.org/w/index.php?title=World_Wide_Web&oldid=1048690604

[75] "CoAP — Constrained Application Protocol | Overview." [*Online*]. Disponível: https://coap.technology/

[76] "MQTT - The Standard for IoT Messaging." [*Online*]. Disponível: https://mqtt.org/

[77] "Base de Dados NoSQL - O Que É NoSQL? | Microsoft Azure." [*Online*]. Disponível: https://azure.microsoft.com/pt-pt/overview/nosql-database/

[78] "MSP430G2553 data sheet, product information and support | TI.com." [*Online*]. Disponível: https://www.ti.com/product/MSP430G2553

[79] Wikipédia, "Wi-fi," published: Website. [*Online*]. Disponível: https://en.wikipedia.org/wiki/General_Packet_Radio_Service

[80] "ESP-01." [*Online*]. Disponível: http://www.ai-thinker.com/pro_view-60.html

[81] "SHT30 Sensor de Temperatura e Humidade Digital i2c." [*Online*]. Disponível: https://www.botnroll.com/pt/temperatura/4067-sht30-sensor-de-temperatura-e-humidade-digital-i2c.html

[82] "TSL2561 Luminosity Sensor Hookup Guide - learn.sparkfun.com." [*Online*]. Disponível: https://learn.sparkfun.com/tutorials/tsl2561-luminosity-sensor-hookup-guide

[83] "One wire," Julho 2019, page Version ID: 55719179. [*Online*]. Disponível: https://pt.wikipedia.org/w/index.php?title=One_wire&oldid=55719179

[84] "DS18B20 Waterproof Temperature Sensor." [*Online*]. Disponível: https://www.seeedstudio.com/DS18B20-Temperature-Sensor-Waterproof-Probe-p-4283.html

[85] "Grove - Capacitive Moisture Sensor (Corrosion-Resistant) - Seeed Wiki." [*Online*]. Disponível: https://wiki.seeedstudio.com/Grove-Capacitive_Moisture_Sensor-Corrosion-Resistant/

[86] "Load Sensor - 50kg (Generic) - SEN-10245 - SparkFun Electronics." [*Online*]. Disponível: https://www.sparkfun.com/products/10245

[87] "Avia Semiconductor (Xiamen) Ltd.-HX711." [*Online*]. Disponível: http://en.aviaic.com/detail/730856.html

[88] "SparkFun Load Cell Amplifier - HX711 - SEN-13879 - SparkFun Electronics." [*Online*]. Disponível: https://www.sparkfun.com/products/13879

[89] "Load Cell - 10kg, Straight Bar (TAL220) - SEN-13329 - SparkFun Electronics." [*Online*]. Disponível: https://www.sparkfun.com/products/13329

[90] "HS-422 Deluxe Standard Servo | HITEC RCD USA." [*Online*]. Disponível: https://hitecrcd.com/products/servos/analog/sport-2/hs-422/product

[91] "Small Solar Panel 80x100mm 1W." [*Online*]. Disponível: https://www.seeedstudio.com/1W-Solar-Panel-80X100.html

[92] "Placa de carregamento para bateria de lítio 1A (TP4056) - Micro-USB." [*Online*]. Disponível: https://mauser.pt/catalog/product_info.php?products_id=096-8206

[93] "BU-204: How do Lithium Batteries Work?" Setembro 2010. [*Online*]. Disponível: https://batteryuniversity.com/article/bu-204-how-do-lithium-batteries-work

[94] "Samsung SDI Small-Sized Li-ion Battery - Index | Samsung SDI." [*Online*]. Disponível: https://www.samsungsdi.com/lithium-ion-battery/index.html

[95] "MSP-EXP430G2ET Development kit | TI.com." [*Online*]. Disponível: https://www.ti.com/tool/MSP-EXP430G2ET

[96] "CCSTUDIO IDE, configuration, compiler or debugger | TI.com." [*Online*]. Disponível: https://www.ti.com/tool/CCSTUDIO

[97] "ESP8266 PROG | Joy-IT." [*Online*]. Disponível: https://joy-it.net/en/products/SBC-ESP8266-PROG

[98] "JSON." [*Online*]. Disponível: https://www.json.org/json-en.html

[99] R. P. Ltd, "Buy a Raspberry Pi Camera Module 2." [*Online*]. Disponível: https://www.raspberrypi.com/products/camera-module-v2/

[100] "Arquitetura ARM," Novembro 2020, page Version ID: 59822910. [*Online*]. Disponível: https://pt.wikipedia.org/w/index.php?title=Arquitetura_ARM&oldid=59822910

[101] "MIPI Camera Serial Interface 2 (MIPI CSI-2)," Janeiro 2017. [*Online*]. Disponível: https://www.mipi.org/specifications/csi-2

[102] R. P. Ltd, "Buy a Raspberry Pi 3 Model B+." [*Online*]. Disponível: https://www.raspberrypi.com/products/raspberry-pi-3-model-b-plus/

[103] "Lm2577 dc-dc voltage step-up (boost) module." [*Online*]. Disponível: http://www.velleman.eu/products/view/?id=435562&country=pt&lang=pt

[104] R. P. Ltd, "Raspberry Pi OS." [*Online*]. Disponível: https://www.raspberrypi.com/software/

[105] R. Light, "paho-mqtt: MQTT version 5.0/3.1.1 client class." [*Online*]. Disponível: http://eclipse.org/paho

[106] D. Jones, "picamera: A pure Python interface for the Raspberry Pi camera module." [*Online*]. Disponível: http://picamera.readthedocs.io/

[107] C. Liechti, "pyserial: Python Serial Port Extension." [*Online*]. Disponível: https://github.com/pyserial/pyserial

[108] "How to Setup Passwordless SSH Login," Junho 2018, section: post. [*Online*]. Disponível: https://linuxize.com/post/how-to-setup-passwordless-ssh-login/

[109] "Controle Numérico Computadorizado," Julho 2021, page Version ID: 61695318. [*Online*]. Disponível: https://pt.wikipedia.org/w/index.php?title=Controle_Num%C3%A9rico_Computadorizado&oldid=61695318

[110] "Código G," Julho 2021, page Version ID: 61687211. [*Online*]. Disponível: https://pt.wikipedia.org/w/index.php?title=C%C3%B3digo_G&oldid=61687211

[111] "FlatCAM: PCB Prototyping CAD/CAM." [*Online*]. Disponível: http://flatcam.org/

[112] "Virtual Machine." [*Online*]. Disponível: https://www.vmware.com/topics/glossary/content/virtual-machine

[113] "Ubuntu Server." [*Online*]. Disponível: https://ubuntu.com/download/server

[114] "What is a Container? | App Containerization | Docker." [*Online*]. Disponível: https://www.docker.com/resources/what-container

[115] "Eclipse Mosquitto," Janeiro 2018. [*Online*]. Disponível: https://mosquitto.org/

[116] "Node-RED." [*Online*]. Disponível: https://nodered.org/

[117] Node.js, "nodejs." [*Online*]. Disponível: https://nodejs.org/en/about/

[118] "mongoDB - The most popular database for modern apps." [*Online*]. Disponível: https://www.mongodb.com

[119] "atmoz/sftp Dockerfile." [*Online*]. Disponível: https://hub.docker.com/r/atmoz/sftp/dockerfile

[120] "TensorFlow." [*Online*]. Disponível: https://www.tensorflow.org/?hl=pt

[121] steve, "How MQTT Works -Beginners Guide," Junho 2018. [*Online*]. Disponível: http://www.steves-internet-guide.com/mqtt-works/

[122] "Learn JavaScript basics with our free JavaScript tutorials for programmers." [*Online*]. Disponível: https://www.javascript.com/about

[123] "Cluster: conceito e características." [*Online*]. Disponível: https://www.infowester.com/cluster.php

[124] "SSH Secure Shell home page, maintained by SSH protocol inventor Tatu Ylonen. SSH clients, servers, tutorials, how-tos." [*Online*]. Disponível: https://www.ssh.com/academy/ssh

[125] "RSA (sistema criptográfico)," Maio 2021, page Version ID: 61145079. [*Online*]. Disponível: https://pt.wikipedia.org/w/index.php?title=RSA_(sistema_criptogr%C3%A1fico)&oldid=61145079

[126] "KiCad EDA." [*Online*]. Disponível: https://www.kicad.org/

[127] "IP ratings | IEC." [*Online*]. Disponível: https://www.iec.ch/ip-ratings

[128] "What are Progressive Web Apps?" [*Online*]. Disponível: https://web.dev/what-are-pwas/

[129] "FileZilla - The free FTP solution." [*Online*]. Disponível: https://filezilla-project.org/

Apêndices

Apêndice I

Código desenvolvido

I.1 MCU Módulo lisímetro

```
/*  LISIMETRO - MIOT1819

 *
 *                    MSP430G2553
 *                 ------------------
 *            /|\|                XIN|-
 *             | |                   |
 *             --|RST            XOUT|-
 *               |                   |
 *   <P ON>---|P1.0            P2.0|--<ONE WIRE>   STSx
 *               |                   |
 *  <UART RX>-|P1.1            P2.1|--<I2C-SCL> |
 *               |                   |               | STA / SHA / SLA
 *  <UART TX>-|P1.2            P2.2|--<I2C-SDL> |
 *               |                   |
 *   <SHS 1>--|P1.3            P2.3|--<HX711-DATA> |
 *               |                   |                 | SPL / SPR
 *   <SHS 2>--|P1.4            P2.4|--<HX711-CLK>  |
 *               |                   |
 *   <SHS 3>--|P1.5            P2.5|--<PWM> VR
 *               |                   |
 *      <SVB>--|P1.6            P2.6|--<XTAL>
 *               |                   |
 *       <SW>--|P1.7            P2.7|--<XTAL>
 *               |                   |
 *                 ------------------
```

```
27  */
28
29
30 #include <msp430.h>
31 #include <stdint.h>
32 #include "CDC.h"
33 #include "delay.h"
34 #include "ds18b20.h"
35 #include "hx711.h"
36 #include "swi2c_master.h"
37 #include "TSL2561.h"
38 #include "SHT3X.H"
39 #include "SERVO.h"
40
41 const unsigned int pooling_time = 600;  // Pooling time in seconds
42
43 const unsigned int t_startup = 3;       // Time to start ESP in seconds
44 const unsigned int t_drain = 15;        // Drain Time in seconds
45
46 unsigned int seconds;                   // Seconds counter
47
48 unsigned int OPEN_VAL = 135;
49 unsigned int CLOSE_VAL = 45;
50
51
52 uint8_t addr1[8]={0x28,0xC0,0xB3,0xE2,0x08,0x00,0x00,0xEB};      //ID
       SHS1
53 uint8_t addr2[8]={0x28,0x10,0xFA,0xE3,0x08,0x00,0x00,0xBA};      //ID
       SHS2
54 uint8_t addr3[8]={0x28,0xCF,0x86,0xE2,0x08,0x00,0x00,0x99};      //ID
       SHS3
55
56
57 static const unsigned int ID = 1901;     // ID do Lisimetro
58 float STA = 0;           // Sensor Temperatura Ambiente [ÂºC]
59 float SHA = 0;           // Sensor Humidade Ambiente [%]
60 unsigned int SL_1 = 0;   // Sensor Luz visivel (V) + Infra Vermerlho (IR
       )
61 unsigned int SL_2 = 0;   // Sensor Luz Infra Vermerlho (IR)
62 float STS_1 = 0;         // Sensor Temperatura Solo 1 [ºC]
63 float STS_2 = 0;         // Sensor Temperatura Solo 2 [ºC]
64 float STS_3 = 0;         // Sensor Temperatura Solo 3 [ºC]
65 unsigned int SH_1 = 0;   // Sensor Humidity Solo 1 [%]
```

```
66 unsigned int SH_2 = 0;   // Sensor Humidity Solo 2 [%]
67 unsigned int SH_3 = 0;   // Sensor Humidade Solo 3 [%]
68 unsigned int SPL = 0;    // Sensor Peso Lisimetro [g]
69 unsigned int SPR_I = 0;    // Sensor Peso Residuos [g]
70 unsigned int SPR_F = 0;    // Sensor Peso Residuos [g]
71 unsigned int SPR = 0;    // Sensor Peso Residuos [g]
72 unsigned int SVB = 0;    // Sensor Voltagem Bateria [mV]
73
74 unsigned int arraySamples[4];    // ADC samples array
75
76
77 void GPIO_Init(void);
78 void BCM_Init(void);
79 void TIMER_Init(void);
80 void USCI_A0_Init(void);
81 void ADC10_Init(void);
82 void ADC10_StartSampling(void);
83 void sendData(void);
84
85
86 void main(void)
87 {
88     WDTCTL = WDTPW | WDTHOLD;    // stop watchdog timer
89
90     seconds = pooling_time - 1;
91
92     GPIO_Init();
93     BCM_Init();
94     TIMER_Init();
95     USCI_A0_Init();
96     ADC10_Init();
97     ADC10_StartSampling();
98
99     _enable_interrupts();
100
101     while(1)
102     {
103         if (seconds == pooling_time) //
104         {
105             P1OUT |= BIT0;   // Power ON
106
107             seconds = 0;
108             while (seconds < t_startup);
```

```
109
110             SWI2C_initI2C();
111
112             //**HX711*******************************
113             HX711_init();
114             SPL = get_Weight(2);
115             SPR_I = get_Weight(1);
116
117             //*SHT3x*******************************
118             init_SHT3X();
119             if(read_SHT3X())
120             {
121                 STA = get_Temp();
122                 SHA = get_Hum();
123             }
124
125             //*TSL2561*****************************
126             init_TSL2561();
127             SL_2 = read_TSL2561_CH1();
128             SL_1 = read_TSL2561_CH0();
129
130             //**DB18B20****************************
131             STS_1 = get_temp_ad(addr1);
132             STS_2 = get_temp_ad(addr2);
133             STS_3 = get_temp_ad(addr3);
134
135             //*ADC*********************************
136             ADC10_StartSampling();
137             SH_1 = arraySamples[1];
138             SH_2 = arraySamples[2];
139             SH_3 = arraySamples[3];
140             SVB  = arraySamples[0];
141
142             init_SERVO();
143             set_SERVO(OPEN_VAL);
144
145             seconds = 0;
146             while (seconds < t_drain);
147
148             set_SERVO(CLOSE_VAL);
149
150             delay_ms(1000); // Time to close valve
151
```

```
152                 HX711_init();
153                 SPR_F = get_Weight(1);
154
155                 if( SPR_I > SPR_F ) SPR = SPR_I - SPR_F;
156                 else SPR = 0;
157
158                 delay_ms(500);
159
160                 sendData();
161
162                 delay_ms(5000); // Time to send data
163
164                 P1OUT &= ~BIT0; // Power OFF
165             }
166             __low_power_mode_3();
167         }
168 }
169
170
171
172
173 void  sendData(void)
174 {
175     p_ui(ID); ec(" ");
176     printfloat(STA); ec(" ");
177     printfloat(SHA); ec(" ");
178     p_ui(SL_1); ec(" ");
179     p_ui(SL_2); ec(" ");
180     printfloat(STS_1); ec(" ");
181     printfloat(STS_2); ec(" ");
182     printfloat(STS_3); ec(" ");
183     p_ui(SH_1); ec(" ");
184     p_ui(SH_2); ec(" ");
185     p_ui(SH_3); ec(" ");
186     p_ui(SVB); ec(" ");
187     p_ui(SPL); ec(" ");
188     p_ui(SPR); ec(" ");
189     LF_();
190     CR_();
191 }
192
193 void GPIO_Init()
194 {
```

```
    P1OUT = (0x00);
    // P1DIR = (0xFF);
    P1DIR = ( BIT6 | BIT5 | BIT4 | BIT3 | BIT2 | BIT1 | BIT0); // P1DIR = (0xF7); BIT7->IN
    // USCI:
    P1SEL  |= (BIT2 |BIT1); // UCA0TXD , UCA0RXD
    P1SEL2 |= (BIT2 |BIT1); // UCA0TXD , UCA0RXD

    P1REN |= BIT7;  // enable pull-up/pull-down resistor
    P1OUT |= BIT7;  // select pull-up resistor

    P1IES |= BIT7;  // select edge interrupt high->low transition
    P1IFG = 0x00;   // clear P1IFG since writing to P1OUT, P1DIR, P2OUT, or P2DIR can result in setting the corresponding P1IFG
                        // or P2IFG flags. (slau144j pg.331)
    P1IE |= BIT7;   // enable interrupt on P1.7
}


void BCM_Init()
{
    DCOCTL = CALDCO_8MHZ;    // DCO frequency select and Modulator selection:
                             // are set with factory calibrated value
    BCSCTL1 = XT2OFF         // XT2 off
            | CALBC1_8MHZ    // Range select: factory value for 8MHz
            | DIVA_0;        // ACLK Divider: 0->/1, 1_>/2, 2->/4, 3->/8

    BCSCTL2 = SELM_0         // Select the MCLK source: 0->DCOCLK, 1->DCOCLK, 2-> XT2CLK when XT2, 3->LFXT1CLK or VLOCLK
            | DIVM_0         // MCLK Divider: 0->/1, 1_>/2, 2->/4, 3->/8
            | DIVS_0;        // SMCLK Divider: 0->/1, 1_>/2, 2->/4, 3->/8:

    BCSCTL3 = LFXT1S_2;      // Low-frequency clock select and LFXT1 range: 0->Crystal 32768Hz, 2->VLOCLK, 3->Ext CLK
}


void USCI_A0_Init(void)
{
    // UART Mode: 9600 8N1
    UCA0CTL1 = UCSSEL_2; // USCI clock source select: SMCLK
```

```
232     // From Table 36.4 in slau144j:
233     // BRCLK Frequency (Hz)      Baud Rate    UCBRx    UCBRSx   UCBRFx
234     // 8 000 000                 9600         833      2        0
235     UCA0BR0 = 0x41;       // UCBRx = 833 = 0x341
236     UCA0BR1 = 0x03;
237     UCA0MCTL = UCBRS_2;
238     // USCI reset released for operation:
239     UCA0CTL1 &= ~ UCSWRST;
240     IE2 |= UCA0RXIE;      // USCI_A0 receive interrupt enable
241 }
242
243 #pragma vector = USCIAB0RX_VECTOR
244 __interrupt void USCIA0RX_ISR(void)
245 {
246     while(!(IFG2 & UCA0TXIFG));
247     UCA0TXBUF = UCA0RXBUF;
248 }
249
250
251 void TIMER_Init()
252 {
253     // Timer A0 settings for 1s counter
254     TA0CCTL0 = CCIE;      // Capture/Compare Interrupt Enable
255     TA0CTL = TASSEL_1     // Clock source = 0->TACLK, 1->ACLK, 2->SMCLK,
            3->INCLK
256             | MC_1        // Mode control = 1->UP / 2->CONTINUOS / 3->UP/
                DOWN
257             | ID_0;       // Divider = 0->/1, 1->/2, 2->/4, 3->/8
258     TA0CCR0 = 10350;      // Compare value: 32768 for 32768Hz crystal,
            10000 for 10KHz VLOCLK (10350 after 1s calibration)
259     // Timer A1 settings for PWM servo control
260     TA1CTL = TASSEL_2     // Clock source = 0->TACLK, 1->ACLK, 2->SMCLK,
            3->INCLK
261             | TACLR       // Timer_A1 clear
262             | MC_1        // Mode control = 1->UP / 2->CONTINUOS / 3->UP/
                DOWN
263             | ID_3;       // Divider = 0->/1, 1->/2, 2->/4, 3->/8
264     TA1CCR0 = 20000;       // Capture and Compare: 20000=> F=50Hz, T=20ms
265     TA1CCTL2 |= OUTMOD_7;     // Output Mode: 7-> Reset/Set
266 }
267
268
269 #pragma vector = TIMER0_A0_VECTOR
```

```
__interrupt void TIMER0_A0_ISR(void)
{
    ++ seconds;
    __low_power_mode_off_on_exit();
}


#pragma vector = PORT1_VECTOR
__interrupt void Port1_ISR(void)
{
    if(P1IFG & BIT7) // switch pressed
    {
        seconds = pooling_time - 1;
    }
    P1IFG &= ~BIT7;  // clear interrupt flag of P1.3
}


void ADC10_Init(void)
{
    // ADC10 Control Register 0:
    ADC10CTL0 = SREF_1        // Select reference: VR+ = VREF+ and VR- = VSS
              | ADC10SHT_0    // ADC10 sample-and-hold time: 4 ï¿½ ADC10CLKs
              | ADC10SR       // ADC10 sampling rate: Reference buffer supports up
                              // to ~50 ksps
              | REFBURST      // Reference buffer on only during
                              // sample-and-conversion
              | MSC           // Multiple sample and conversion
              | REF2_5V       // Reference-generator voltage 2.5V
              | REFON         // Reference generator on: V_REF+ takes 30 us to
                              // settle (slau144j pg. 38)
              | ADC10ON       // ADC10 on
              | ADC10IE;       // ADC10 interrupt enable

    // ADC10 Control Register 1:
    ADC10CTL1 = INCH_6        //  Input channel selection: A6-A5-A4-A3
              | SHS_0         //  Sample-and hold source select:
              | ADC10DIV_3    // ADC10 clock divider: /4
              | ADC10SSEL_0   // ADC10 clock source select: ADC10OSC - 0
```

```
309                 | CONSEQ_1;       // Conversion sequence mode select:
310                                     //     Sequence-of-channels (A7 - A6 - A5 -
                                            A4)
311
312
313     // Analog (Input) Enable Control Register 0:
314     ADC10AE0 |= BIT3
315                 | BIT4          // ADC10 analog enable: A7 on P1.7
316                 | BIT5            // ADC10 analog enable: A6 on P1.6
317                 | BIT6;           //
318     // ADC10 data transfer control register 1:
319     ADC10DTC1 = 4;          // Define the number of transfers: 4 values
320 }
321
322
323 void ADC10_StartSampling(void)
324 {
325 //      while (ADC10CTL1 & ADC10BUSY);  // Wait if ADC10 core is active
326     // ADC10 data transfer start address:
327     ADC10SA = (unsigned int) arraySamples; // ADC10 start address
328     ADC10CTL0 |= ENC        // Enable conversion
329                 | ADC10SC;
330     delay_ms(1);
331 }
332
333 #pragma vector = ADC10_VECTOR
334 __interrupt void ADC10_ISR(void)
335 {
336    ADC10CTL0 &= ~ENC;
337    __low_power_mode_off_on_exit();
338 }
```

Listagem I.1: Código do programa principal main.c (MCU Módulo lisímetro).

```
1 /*
2  * TSL2561.h
3  *
4  *  Created on: 07/10/2019
5  *      Author: Carlos Almeida
6  */
7
8 #ifndef TSL2561_H_
9 #define TSL2561_H_
```

```
10
11 #include <msp430.h>
12 #include <stdbool.h>
13 #include <stdint.h>
14
15 void init_TSL2561();
16 unsigned int read_TSL2561_CH0();
17 unsigned int read_TSL2561_CH1();
18
19 SWI2C_I2CTransaction TSL2561;
20
21 uint8_t WR_Buffer[2];
22 uint8_t RD_Buffer[6];
23
24 void init_TSL2561()
25 {
26     TSL2561.address = 0x39;
27     WR_Buffer[0] = 0x80;    // CMD
28     WR_Buffer[1] = 0x03;    // DATA
29     TSL2561.writeBuffer = WR_Buffer;
30     TSL2561.numWriteBytes = 2;
31     SWI2C_performI2CTransaction(&TSL2561);
32     delay_ms(150);
33     SWI2C_performI2CTransaction(&TSL2561);
34     delay_ms(150);
35
36     TSL2561.address = 0x39;
37     WR_Buffer[0] = 0x81;    // CMD - Set up Timing Register
38     WR_Buffer[1] = 0x02;    // DATA set gain 1x integration time 402ms
           (pág. 20)
39     TSL2561.writeBuffer = WR_Buffer;
40     TSL2561.numWriteBytes = 2;
41     SWI2C_performI2CTransaction(&TSL2561);
42     delay_ms(150);
43     SWI2C_performI2CTransaction(&TSL2561);
44     delay_ms(150);
45 }
46
47 unsigned int read_TSL2561_CH0()
48 {
49     TSL2561.address = 0x39;
50     WR_Buffer[0] = 0xAC;    // CMD Read Word
51     TSL2561.writeBuffer = WR_Buffer;
```

```
52      TSL2561.numWriteBytes = 1;
53      TSL2561.numReadBytes = 2;
54      TSL2561.readBuffer = RD_Buffer;
55      SWI2C_performI2CTransaction(&TSL2561);
56      delay_ms(150);
57      SWI2C_performI2CTransaction(&TSL2561);
58      delay_ms(150);
59      return (256*RD_Buffer[1]+RD_Buffer[0]);
60  }
61
62
63  unsigned int read_TSL2561_CH1()
64  {
65      TSL2561.address = 0x39;
66      WR_Buffer[0] = 0xAE;      // CMD Read Word
67      TSL2561.writeBuffer = WR_Buffer;
68      TSL2561.numWriteBytes = 1;
69      TSL2561.numReadBytes = 2;
70      TSL2561.readBuffer = RD_Buffer;
71      SWI2C_performI2CTransaction(&TSL2561);
72      delay_ms(150);
73      SWI2C_performI2CTransaction(&TSL2561);
74      delay_ms(150);
75      return (256*RD_Buffer[1]+RD_Buffer[0]);
76  }
77
78  #endif /* TSL2561_H_ */
```

Listagem I.2: Código CDC.c (MCU Módulo lisímetro).

```
1   #ifndef DELAY_H_
2   #define DELAY_H_
3
4   void delay_ms(unsigned int ms);
5   void delay_us(unsigned int us);
6
7
8   void delay_us(unsigned int us)
9   {
10      while (us)
11      {
12          __delay_cycles(8); // 1 for 1 Mhz set 16 for 16 MHz
13          us--;
```

```
14      }
15 }
16
17 void delay_ms(unsigned int ms)
18 {
19      while (ms)
20      {
21          __delay_cycles(8000);// 1000 for 1MHz and 16000 for 16MHz
22          ms--;
23      }
24 }
25
26 #endif /* #endif  DELAY_H_ */
```

Listagem I.3: Código delay.h (MCU Módulo lisímetro).

```
1 /##########################################################################
2 // https://www.maximintegrated.com/en/app-notes/index.mvp/id/187
3
4 #include <msp430g2553.h>
5 #include <stdio.h>
6 #include <stdint.h>
7
8 #include "ds18b20.h"
9
10
11
12 float celsius [4];
13 uint8_t data[12];
14 uint8_t i;
15
16 //##########################################################################
17 void ow_portsetup() {
18      OWPORTDIR |= OWPORTPIN;
19      OWPORTOUT |= OWPORTPIN;
20      OWPORTREN |= OWPORTPIN;
21 }
22
23
24 //##########################################################################
25 void select(uint8_t id[8]){
26      uint8_t i;
27      ow_write_byte(0x55);
```

```
28      for (i=0; i<8; i++) ow_write_byte(id[i]);
29 }
30
31 //#########################################################################
32
33 /// @return: 0 if ok
34 int ow_reset()
35 {
36  OW_LO
37   delay_us(480); // 480us minimum
38  OW_RLS
39    delay_us(40); // slave waits 15-60us
40    if (OWPORTIN & OWPORTPIN) return 1; // line should be pulled down by
        slave
41    delay_us(300); // slave TX presence pulse 60-240us
42    if (!(OWPORTIN & OWPORTPIN)) return 2; // line should be "released"
        by slave
43    return 0;
44 }
45
46 //#########################################################################
47 void ow_write_bit(int bit)
48 {
49 //   delay_us(1); // recovery, min 1us
50   OW_HI
51    if (bit) {
52  OW_LO
53      delay_us(5); // max 15us
54  OW_RLS // input
55      delay_us(56);
56    }
57    else {
58     OW_LO
59     delay_us(60); // min 60us
60     OW_RLS // input
61     delay_us(1);
62    }
63   }
64
65 //#########################################################################
66 int ow_read_bit()
67 {
68    int bit=0;
```

```
69 //   delay_us(1); // recovery, min 1us
70   OW_LO
71   delay_us(5); // hold min 1us
72   OW_RLS
73   delay_us(10); // 15us window
74   if (OWPORTIN & OWPORTPIN) {
75     bit = 1;
76   }
77   delay_us(46); // rest of the read slot
78   return bit;
79 }
80
81 //#######################################################################
82 void ow_write_byte(uint8_t byte)
83 {
84   int i;
85   for(i = 0; i < 8; i++)
86   {
87     ow_write_bit(byte & 1);
88     byte >>= 1;
89   }
90 }
91
92 //#######################################################################
93 uint8_t ow_read_byte()
94 {
95  unsigned int i;
96   uint8_t byte = 0;
97   for(i = 0; i < 8; i++)
98   {
99     byte >>= 1;
100     if (ow_read_bit()) byte |= 0x80;
101   }
102   return byte;
103 }
104
105 //#######################################################################
106
107 float get_temp()
108 {
109     uint8_t i;
110     uint8_t type_s=0;
111 //     uint8_t data[12];
```

```
112
113     ow_reset();
114     ow_write_byte(DS1820_SKIP_ROM); // skip ROM command
115     ow_write_byte(DS1820_CONVERT_T); // convert T command
116     OW_HI
117     delay_ms(75); // at least 750 ms for the default 12-bit resolution
118     ow_reset();
119     ow_write_byte(DS1820_SKIP_ROM); // skip ROM command
120     ow_write_byte(DS1820_READ_SCRATCHPAD); // read scratchpad command
121
122     for (i = 0; i < 9; i++) {
123         data[i] = ow_read_byte();
124     }
125
126     int16_t raw = (data[1] << 8) | data[0];
127     if (type_s) {
128         raw = raw << 3; // 9 bit resolution default
129         if (data[7] == 0x10) {
130             // "count remain" gives full 12 bit resolution
131             raw = (raw & 0xFFF0) + 12 - data[6];
132         }
133     } else {
134         uint8_t cfg = (data[4] & 0x60);
135         // at lower res, the low bits are undefined, so let's zero them
136         if (cfg == 0x00) raw = raw & ~7;  // 9 bit resolution, 93.75 ms
137         else if (cfg == 0x20) raw = raw & ~3; // 10 bit res, 187.5 ms
138         else if (cfg == 0x40) raw = raw & ~1; // 11 bit res, 375 ms
139         //// default is 12 bit resolution, 750 ms conversion time
140     }
141     return (float)raw / 16.0;
142 }
143
144 //##########################################################################
145
146 float get_temp_ad(uint8_t addr[8])
147 {
148
149     ow_reset();
150     select(addr);
151     ow_write_byte(DS1820_CONVERT_T); // convert T command
152     OW_HI
153     delay_ms(750); // at least 750 ms for the default 12-bit resolution
154     ow_reset();
```

```
155     select(addr);
156     ow_write_byte(DS1820_READ_SCRATCHPAD); // read scratchpad command
157
158     for (i = 0; i < 9; i++) {
159         data[i] = ow_read_byte();
160     }
161
162     int16_t raw = (data[1] << 8) | data[0];
163     uint8_t cfg = (data[4] & 0x60);
164     // at lower res, the low bits are undefined, so let's zero them
165     if (cfg == 0x00) raw = raw & ~7;  // 9 bit resolution, 93.75 ms
166     else if (cfg == 0x20) raw = raw & ~3; // 10 bit res, 187.5 ms
167     else if (cfg == 0x40) raw = raw & ~1; // 11 bit res, 375 ms
168     //// default is 12 bit resolution, 750 ms conversion time
169   //  }
170     return (float)raw / 16.0;
171
172 }
```

Listagem I.4: Código ds18b20.c (MCU Módulo lisímetro).

```
1 ##########################################################################
2 // https://www.maximintegrated.com/en/app-notes/index.mvp/id/187
3
4 #ifndef DS18B20_H_
5 #define DS18B20_H_
6 #include <stdint.h>
7
8
9 // Port and pins definition:
10 #define OWPORTDIR P2DIR
11 #define OWPORTOUT P2OUT
12 #define OWPORTIN P2IN
13 #define OWPORTREN P2REN
14 #define OWPORTPIN BIT0
15 #define OW_LO { OWPORTDIR |= OWPORTPIN; OWPORTREN &= ~OWPORTPIN;
       OWPORTOUT &= ~OWPORTPIN; }
16 #define OW_HI { OWPORTDIR |= OWPORTPIN; OWPORTREN &= ~OWPORTPIN;
       OWPORTOUT |= OWPORTPIN; }
17 #define OW_RLS { OWPORTDIR &= ~OWPORTPIN; OWPORTREN |= OWPORTPIN;
       OWPORTOUT |= OWPORTPIN; }
18
19 // list of commands DS18B20:
```

```
20
21 #define DS1820_WRITE_SCRATCHPAD   0x4E
22 #define DS1820_READ_SCRATCHPAD        0xBE
23 #define DS1820_COPY_SCRATCHPAD    0x48
24 #define DS1820_READ_EEPROM      0xB8
25 #define DS1820_READ_PWRSUPPLY    0xB4
26 #define DS1820_SEARCHROM      0xF0
27 #define DS1820_SKIP_ROM                0xCC
28 #define DS1820_READROM       0x33
29 #define DS1820_MATCHROM      0x55
30 #define DS1820_ALARMSEARCH      0xEC
31 #define DS1820_CONVERT_T               0x44
32
33 // Function definitions:
34 void ow_portsetup();
35 int ow_reset();
36 void ow_write_bit(int bit);
37 int ow_read_bit();
38 void ow_write_byte(uint8_t byte);
39 uint8_t ow_read_byte();
40 void onewire_line_low();
41 void onewire_line_high();
42 void onewire_line_release();
43 float get_temp_ad(uint8_t addr[8]);
44 float get_temp();
45
46 #endif /* ONEWIRE_H_ */
```

Listagem I.5: Código ds18b20.h (MCU Módulo lisímetro).

```
1 /*
2  * HX711 driver
3  *
4  *   Created on: 19/05/2019
5  *       Author: Carlos Almeida
6  *       Develop by Lysimeter MIOT1819
7  */
8
9
10 #ifndef HX711_H_
11 #define HX711_H_
12
13 #include "delay.h"
```

```
14 #include <stdint.h>
15
16 #define ADSK BIT4    // Clock
17 #define ADDO BIT3    // Data
18
19 // Functions
20 //
    ***********************************************************************
21 unsigned long read_HX711(void);          // Read ADC Converter
22 void calibration(uint8_t ch);             // Calibration channel
23 int get_Weight(uint8_t ch);               // Get weight channel in grams
24 void set_CH(unsigned char);               // Set channel - 0->Ch A, 1->Ch
     B, 2->Ch A
25 void power_off();
26 void HX711_init();
27
28 //unsigned long count;
29 // Constants
30 //
    ***********************************************************************
31 const float F_CAL[3] = {1.15, 8.88, 0.575};          // Calibration
    factor - Ch A, Ch B, Ch A
32
33 //Variables
34 //
    ***********************************************************************
35 uint8_t clk_pulses;
36 long buffer = 0;
37 long weight = 0;
38
39 //#pragma LOCATION(calibration_value, 0x1000);          // Save in Flash
    Memory Address 0x1000
40 unsigned long calibration_value[3] = {8460000, 8543011, 8555100};  //
    Calibration Value - Ch A, Ch B, Ch A
41
42
43 //
    ***********************************************************************
44 int get_Weight(uint8_t ch)
```

```
45 {
46     set_CH(ch);
47     read_HX711();
48     buffer = read_HX711();
49     weight = (buffer - calibration_value[ch-1]) /100;
50     weight = (int)((float)weight*F_CAL[ch-1]);  // calibration factor /
           need adjust to compare
51
52     return weight;
53 }
54
55 //
       ***********************************************************************
56 void calibration(uint8_t ch)
57 {
58     set_CH(ch);
59     read_HX711();
60     buffer = read_HX711();
61     calibration_value[ch-1] = buffer;
62 }
63
64
65 //
       ***********************************************************************
66 void power_off()
67 {
68     P2OUT |= ADSK;
69     delay_us(60);
70 }
71
72 //
       ***********************************************************************
73 void set_CH(uint8_t ch)
74 {
75     switch (ch){
76
77         case 1:
78             clk_pulses = 25;     // Channel A - gain of 128
79             break;
80         case 2:
```

```
81                clk_pulses = 26;     // Channel B - gain of 32
82                break;
83            case 3:
84                clk_pulses = 27;     // Channel A - gain of 64
85                break;
86
87            default: clk_pulses = 25;
88        }
89 }
90
91
92
93 //
       ***********************************************************************
94 unsigned long read_HX711 (){
95        unsigned long count;
96        unsigned char i;
97        P2OUT |= ADDO;
98 //        delay_us(1);
99        P2OUT &= ~ADSK;
100       delay_us(1);
101       count = 0;
102       while(P2IN == ADDO);
103       for(i=1; i<clk_pulses; i++){
104           P2OUT |= ADSK;
105           delay_us(10);
106           count = count << 1;
107           P2OUT &= ~ADSK;
108           delay_us(10);
109           if(P2IN == ADDO) count ++;
110       }
111       P2OUT |= ADSK;
112       delay_us(10);
113       count = count^0x800000;
114       P2OUT &= ~ADSK;
115       delay_us(10);
116
117       return (count);
118
119 }
120
121 void HX711_init()   //  &= 0    / |= 1
```

```
{
    P2OUT = 0x00;
    P2DIR = 0xFF;
    P2DIR &= ~ADDO;
    P2SEL = 0x00;
}

#endif
```

Listagem I.6: Código hx711.h (MCU Módulo lisímetro).

```
/*
 * servo.h
 *
 *  Created on: 01/12/2019
 *      Author: Carlos Almeida
 */

#ifndef SERVO_H_
#define SERVO_H_


#include <msp430g2553.h>
#include <stdio.h>
#include <stdint.h>


void init_SERVO();

void set_SERVO(unsigned int ang );



void init_SERVO()
{

    P2SEL |= BIT5;
//    P2SEL2 &= ~BIT5;
}

void set_SERVO(unsigned int ang )
{
    TA1CCR2 = 530 + ang*10; // TA1CCR2: 500 => T=0.5ms, 2500 => T=2.5ms
```

```
33 }
34
35
36 #endif /* SERVO_H_ */
```

Listagem I.7: Código servo.h (MCU Módulo lisímetro).

```
1 *
2  * sht3x.h
3  *
4  *  Created on: 03/11/2019
5  *      Author: Carlos Almeida
6  */
7
8 #ifndef SHT3X_H_
9 #define SHT3X_H_
10
11 #include <msp430.h>
12 #include <stdbool.h>
13 #include <stdint.h>
14
15 void init_SHT3X();
16 bool read_SHT3X();
17 float get_Temp();
18 float get_Hum();
19
20 SWI2C_I2CTransaction SHT3X;
21 uint8_t WR_Buffer[2];
22 uint8_t RD_Buffer[6];
23
24 void init_SHT3X()
25 {
26     SHT3X.address = 0x44;
27     WR_Buffer[0] = 0x30;      // CMD
28     WR_Buffer[1] = 0xA2;      // DATA
29     SHT3X.writeBuffer = WR_Buffer;
30     SHT3X.numWriteBytes = 2;
31     SWI2C_performI2CTransaction(&SHT3X);
32     delay_ms(5);
33     SWI2C_performI2CTransaction(&SHT3X);
34     delay_ms(5);
35 }
36
```

```
37
38 bool read_SHT3X()
39 {
40     SHT3X.address = 0x44;
41     WR_Buffer[0] = 0x24;     // CMD Read Word
42     WR_Buffer[1] = 0x0b;
43     SHT3X.writeBuffer = WR_Buffer;
44     SHT3X.numWriteBytes = 2;
45     SHT3X.numReadBytes = 6;
46     SHT3X.readBuffer = RD_Buffer;
47     SWI2C_performI2CTransaction(&SHT3X);
48     delay_ms(5);
49     SWI2C_performI2CTransaction(&SHT3X);
50     delay_ms(5);
51     // check CRC for both RH and T
52     if (crc8(&RD_Buffer[0], 2) != RD_Buffer[2] || crc8(&RD_Buffer[3],
           2) != RD_Buffer[5]) {
53       return false;
54     }
55     return true;
56 }
57
58 float get_Temp()
59 {
60     uint32_t stemp = ((uint32_t)RD_Buffer[0] << 8) | RD_Buffer[1];
61     stemp = ((4375 * stemp) >> 14) - 4500;
62     return  (float) stemp / 100.0;
63
64 }
65
66 float get_Temp1()
67 {
68     uint16_t stemp = ((uint16_t)RD_Buffer[0] << 8) | RD_Buffer[1];
69     float temp = -45 + 175 * ((float)stemp/65535);
70     return  temp;
71 }
72
73
74
75
76 float get_Hum()
77 {
78     uint32_t shum = ((uint32_t)RD_Buffer[3] << 8) | RD_Buffer[4];
```

```
    shum = (625 * shum) >> 12;
    return (float) shum / 100.0f;
  }


crc8(const uint8_t *data)
{
  // adapted from SHT21 sample code from
  // http://www.sensirion.com/en/products/humidity-temperature/download
      -center/

  uint8_t crc = 0xff;
  uint8_t byteCtr;
  uint8_t bit;
  for (byteCtr = 0; byteCtr < 2; ++byteCtr) {
    crc ^= data[byteCtr];
    for (bit = 8; bit > 0; --bit) {
      if (crc & 0x80) {
        crc = (crc << 1) ^ 0x31;
      } else {
        crc = (crc << 1);
      }
    }
  }
  return crc;
}

#endif /* SHT3X_H_ */
```

Listagem I.8: Código sht3x.h (MCU Módulo lisímetro).

```
/*
 * TSL2561.h
 *
 *  Created on: 07/10/2019
 *      Author: Carlos Almeida
 */

#ifndef TSL2561_H_
#define TSL2561_H_

#include <msp430.h>
#include <stdbool.h>
```

```
13 #include <stdint.h>
14
15 void init_TSL2561();
16 unsigned int read_TSL2561_CH0();
17 unsigned int read_TSL2561_CH1();
18
19 SWI2C_I2CTransaction TSL2561;
20
21 uint8_t WR_Buffer[2];
22 uint8_t RD_Buffer[6];
23
24 void init_TSL2561()
25 {
26     TSL2561.address = 0x39;
27     WR_Buffer[0] = 0x80;    // CMD
28     WR_Buffer[1] = 0x03;    // DATA
29     TSL2561.writeBuffer = WR_Buffer;
30     TSL2561.numWriteBytes = 2;
31     SWI2C_performI2CTransaction(&TSL2561);
32     delay_ms(150);
33     SWI2C_performI2CTransaction(&TSL2561);
34     delay_ms(150);
35
36     TSL2561.address = 0x39;
37     WR_Buffer[0] = 0x81;    // CMD - Set up Timing Register
38     WR_Buffer[1] = 0x02;    // DATA set gain 1x integration time 402ms
           (pág. 20)
39     TSL2561.writeBuffer = WR_Buffer;
40     TSL2561.numWriteBytes = 2;
41     SWI2C_performI2CTransaction(&TSL2561);
42     delay_ms(150);
43     SWI2C_performI2CTransaction(&TSL2561);
44     delay_ms(150);
45 }
46
47 unsigned int read_TSL2561_CH0()
48 {
49     TSL2561.address = 0x39;
50     WR_Buffer[0] = 0xAC;    // CMD Read Word
51     TSL2561.writeBuffer = WR_Buffer;
52     TSL2561.numWriteBytes = 1;
53     TSL2561.numReadBytes = 2;
54     TSL2561.readBuffer = RD_Buffer;
```

```
55      SWI2C_performI2CTransaction(&TSL2561);
56      delay_ms(150);
57      SWI2C_performI2CTransaction(&TSL2561);
58      delay_ms(150);
59      return (256*RD_Buffer[1]+RD_Buffer[0]);
60  }
61
62
63  unsigned int read_TSL2561_CH1()
64  {
65      TSL2561.address = 0x39;
66      WR_Buffer[0] = 0xAE;      // CMD Read Word
67      TSL2561.writeBuffer = WR_Buffer;
68      TSL2561.numWriteBytes = 1;
69      TSL2561.numReadBytes = 2;
70      TSL2561.readBuffer = RD_Buffer;
71      SWI2C_performI2CTransaction(&TSL2561);
72      delay_ms(150);
73      SWI2C_performI2CTransaction(&TSL2561);
74      delay_ms(150);
75      return (256*RD_Buffer[1]+RD_Buffer[0]);
76  }
77
78  #endif /* TSL2561_H_ */
```

Listagem I.9: Código TSL2561.h (MCU Módulo lisímetro).

```
1  /* --COPYRIGHT--,BSD
2   * Copyright (c) 2016, Texas Instruments Incorporated
3   * All rights reserved.
4   *
5   * Redistribution and use in source and binary forms, with or without
6   * modification, are permitted provided that the following conditions
7   * are met:
8   *
9   * *  Redistributions of source code must retain the above copyright
10  *    notice, this list of conditions and the following disclaimer.
11  *
12  * *  Redistributions in binary form must reproduce the above copyright
13  *    notice, this list of conditions and the following disclaimer in
        the
14  *    documentation and/or other materials provided with the
        distribution.
```

```
15  *
16  * *  Neither the name of Texas Instruments Incorporated nor the names
        of
17  *     its contributors may be used to endorse or promote products
        derived
18  *     from this software without specific prior written permission.
19  *
20  * THIS SOFTWARE IS PROVIDED BY THE COPYRIGHT HOLDERS AND CONTRIBUTORS
        "AS IS"
21  * AND ANY EXPRESS OR IMPLIED WARRANTIES, INCLUDING, BUT NOT LIMITED TO
        ,
22  * THE IMPLIED WARRANTIES OF MERCHANTABILITY AND FITNESS FOR A
        PARTICULAR
23  * PURPOSE ARE DISCLAIMED. IN NO EVENT SHALL THE COPYRIGHT OWNER OR
24  * CONTRIBUTORS BE LIABLE FOR ANY DIRECT, INDIRECT, INCIDENTAL, SPECIAL
        ,
25  * EXEMPLARY, OR CONSEQUENTIAL DAMAGES (INCLUDING, BUT NOT LIMITED TO,
26  * PROCUREMENT OF SUBSTITUTE GOODS OR SERVICES; LOSS OF USE, DATA, OR
        PROFITS;
27  * OR BUSINESS INTERRUPTION) HOWEVER CAUSED AND ON ANY THEORY OF
        LIABILITY,
28  * WHETHER IN CONTRACT, STRICT LIABILITY, OR TORT (INCLUDING NEGLIGENCE
         OR
29  * OTHERWISE) ARISING IN ANY WAY OUT OF THE USE OF THIS SOFTWARE,
30  * EVEN IF ADVISED OF THE POSSIBILITY OF SUCH DAMAGE.
31  * --/COPYRIGHT--*/
32 //
       ******************************************************************************
33
34 #include "swi2c_master.h"
35
36 //#include "delay.h"
37
38 int dl = 5;
39
40 /* Static Functions */
41 static bool SWI2C_readData(uint8_t addr,  uint8_t *inputArray,
       uint_fast16_t size);
42 static bool SWI2C_writeData(uint8_t addr, uint8_t *outputArray,
       uint_fast16_t size, bool sendStop);
43
44 void SWI2C_initI2C(void)
```

```
45 {
46     /* Using the direction pin to control the output. When set as an
           input, the
47         hardware pull-ups will take over and cause the pin to go high.
               When
48         set as an output, the MSP430 will drive the lines low */
49     SWI2C_PxOUT &= ~(SWI2C_SCL | SWI2C_SDA);
50     SWI2C_SCL_HIGH;
51     SWI2C_SDA_HIGH;
52
53 //     PM5CTL0 &= ~LOCKLPM5;                    // Disable the GPIO power
       -on default high-impedance mode
54                                                // to activate previously
                                                     configured port
                                                     settings
55
56     /* Timer is initialized to run off SMCLK(8MHz) with frequency 200
           KHz */
57 //     TB0CCR0 = SWI2C_TIMER_PERIOD;
58 }
59
60 bool SWI2C_performI2CTransaction(SWI2C_I2CTransaction *i2cTransaction)
61 {
62     if(i2cTransaction->numWriteBytes > 0)
63     {
64         /* Only skipping the stop if we have a repeated start to send
               */
65         if(i2cTransaction->repeatedStart && i2cTransaction->
               numReadBytes > 0)
66         {
67             if (!SWI2C_writeData(i2cTransaction->address,
68                     i2cTransaction->writeBuffer, i2cTransaction->
                         numWriteBytes,
69                     false))
70             {
71                 return false;
72             }
73         }
74         else
75         {
76             if (!SWI2C_writeData(i2cTransaction->address,
77                     i2cTransaction->writeBuffer, i2cTransaction->
                         numWriteBytes,
```

```
78                      true))
79              {
80                  return false;
81              }
82          }
83      }
84
85      /* Next doing the read */
86      if (i2cTransaction->numReadBytes > 0)
87      {
88          if (!SWI2C_readData(i2cTransaction->address, i2cTransaction->
                readBuffer,
89                  i2cTransaction->numReadBytes))
90          {
91              return false;
92          }
93      }
94
95      return true;
96  }
97
98  static bool SWI2C_writeData(uint8_t addr, uint8_t *outputArray,
        uint_fast16_t size, bool sendStop)
99  {
100     uint_fast8_t bits, temp;
101     uint16_t ii = 0;
102
103     /* Starting the timer */
104 //      TB0CTL = TBSSEL_2 + MC_1 + TBCLR;
105
106     /* Sending the START */
107     SWI2C_SDA_LOW;
108     __no_operation();
109     SWI2C_SCL_LOW;
110 //      TIMER_ITERATION();
111     delay_us(dl);
112
113     /* Next doing the control byte */
114     temp = (addr << 1);
115     bits = 8;
116
117     /* Loop until all bits of the address byte are sent out */
118     do
```

```
119     {
120         /* Deciding if we want to send a high or low out of the line */
121         if (temp & BIT7)
122         {
123             SWI2C_SDA_HIGH;
124         }
125         else
126         {
127             SWI2C_SDA_LOW;
128         }
129
130         /* Now that we set the SDA line, we have to send out a clock
                pulse */
131         SWI2C_SCL_HIGH;
132 //          TIMER_ITERATION();
133         delay_us(dl);
134
135         /* Incrementing to the next bit and waiting for the next clock
                cycle */
136         temp = (temp << 1);
137         bits = (bits - 1);
138
139         SWI2C_SCL_LOW;
140 //          TIMER_ITERATION();
141         delay_us(dl);
142
143
144     } while (bits > 0);
145
146     /* Detecting if we have a NAK on the bus. If the slave device NAKed
            the
147         control byte, it probably isn't there on the bus so we should
                send
148          an I2C stop and return false */
149     SWI2C_SDA_HIGH;
150     SWI2C_SCL_HIGH;
151     /*
152     * Waiting for our clock line to go high if the slave is stretching
153     */
154     while(!(SWI2C_PxIN & SWI2C_SCL));
155
156 //      TIMER_ITERATION();
157     delay_us(dl);
```

```
158
159     if(SWI2C_PxIN & SWI2C_SDA)
160     {
161         goto I2CWriteTransactionCleanUp;
162     }
163
164     /* Sending out another clock cycle */
165     SWI2C_SCL_LOW;
166 //      TIMER_ITERATION();
167     delay_us(dl);
168
169     /* Next, let us send out all bytes in the user buffer */
170     for(ii=0;ii<size;ii++)
171     {
172         temp = outputArray[ii];
173         bits = 8;
174
175         /* Loop until all bits of the current byte are sent out */
176         do
177         {
178             /* Deciding if we want to send a high or low out of the
                    line */
179             if (temp & BIT7)
180             {
181                 SWI2C_SDA_HIGH;
182             }
183             else
184             {
185                 SWI2C_SDA_LOW;
186             }
187
188             /* Now that we set the SDA line, we send out a clock pulse
                    */
189             SWI2C_SCL_HIGH;
190 //              TIMER_ITERATION();
191             delay_us(dl);
192
193             /* Incrementing to the next bit and waiting for next clock
                    cycle */
194             temp = (temp << 1);
195             bits = (bits - 1);
196             SWI2C_SCL_LOW;
197 //              TIMER_ITERATION();
```

```
198                 delay_us(dl);
199
200             } while (bits > 0);
201
202             /* Detecting the NAK. We should break out of the send loop */
203             SWI2C_SDA_HIGH;
204             SWI2C_SCL_HIGH;
205            /*
206             * Waiting for our clock line to go high if the slave is
                  stretching
207             */
208             while(!(SWI2C_PxIN & SWI2C_SCL));
209
210 //            TIMER_ITERATION();
211             delay_us(dl);
212
213             if(SWI2C_PxIN & SWI2C_SDA)
214             {
215                 goto I2CWriteTransactionCleanUp;
216             }
217
218             /* Sending out another clock cycle */
219             SWI2C_SCL_LOW;
220 //            TIMER_ITERATION();
221             delay_us(dl);
222         }
223
224 I2CWriteTransactionCleanUp:
225         /* If the user did not request to skip, we send out the stop bit */
226         if((sendStop && ii == size) || (ii != size))
227         {
228             SWI2C_SCL_LOW;
229 //            TIMER_ITERATION();
230             delay_us(dl);
231             SWI2C_SDA_LOW;
232 //            TIMER_ITERATION();
233             delay_us(dl);
234             SWI2C_SCL_HIGH;
235             __no_operation();
236             SWI2C_SDA_HIGH;
237         }
238         else
239         {
```

```
240         SWI2C_SCL_HIGH;
241         SWI2C_SDA_HIGH;
242     }
243
244     /* Stop the timer */
245 //     TB0CTL = MC_0;
246
247     /* If all bytes were sent, return true- otherwise false. */
248     if(ii == size)
249         return true;
250     else
251         return false;
252 }
253
254 static bool SWI2C_readData(uint8_t addr, uint8_t *inputArray,
        uint_fast16_t size)
255 {
256     uint_fast8_t bits, temp;
257     uint16_t ii = 0;
258
259     /* Starting the timer */
260 //     TB0CTL = TBSSEL_2 + MC_1 + TBCLR;
261
262     /* Sending the START */
263     SWI2C_SDA_LOW;
264     __no_operation();
265     SWI2C_SCL_LOW;
266 //     TIMER_ITERATION();
267     delay_us(dl);
268
269     /* Next doing the control byte */
270     temp = (addr << 1) | BIT0;
271     bits = 8;
272
273     /* Loop until all bits of the address byte are sent out */
274     do
275     {
276         /* Deciding if we want to send a high or low out of the line */
277         if (temp & BIT7)
278         {
279             SWI2C_SDA_HIGH;
280         }
281         else
```

```
282         {
283             SWI2C_SDA_LOW;
284         }
285
286         /* Now that we set the SDA line, we have to send out a clock
                pulse */
287         SWI2C_SCL_HIGH;
288 //          TIMER_ITERATION();
289         delay_us(dl);
290
291         /* Incrementing to the next bit and waiting for the next clock
                cycle */
292         temp = (temp << 1);
293         bits = (bits - 1);
294         SWI2C_SCL_LOW;
295 //          TIMER_ITERATION();
296         delay_us(dl);
297
298     } while (bits > 0);
299
300     /* Detecting if we have a NAK on the bus. If the slave device NAKed
            the
301         control byte, it probably isn't there on the bus so we should
                send
302          an I2C stop and return false */
303     SWI2C_SDA_HIGH;
304     SWI2C_SCL_HIGH;
305 //      TIMER_ITERATION();
306     delay_us(dl);
307
308     if(SWI2C_PxIN & SWI2C_SDA)
309     {
310         goto I2CReadTransactionCleanUp;
311     }
312
313     /* Next, we want to read out all of the data requested */
314     for(ii=0;ii<size;ii++)
315     {
316         /*
317         * Waiting for our clock line to go high if the slave is
                stretching
318         */
319         while(!(SWI2C_PxIN & SWI2C_SCL));
```

```
320
321         /* Setup the read variables */
322         temp = 0;
323         bits = 0x08;
324
325          /* Sending out another clock cycle */
326          SWI2C_SCL_LOW;
327 //           TIMER_ITERATION();
328          delay_us(dl);
329          SWI2C_SDA_HIGH;
330
331         /* Loop to read until all bits have been read */
332         do
333         {
334             /* Priming our temporary variable and sending a clock pulse
                    */
335             temp = (temp << 1);
336             SWI2C_SCL_HIGH;
337 //              TIMER_ITERATION();
338             delay_us(dl);
339
340             /* If the data line is high, recording that */
341             if (SWI2C_PxIN & SWI2C_SDA)
342             {
343               temp += 1;
344             }
345
346             /* Send out another clock cycle and decrement our counter
                    */
347             bits = (bits - 1);
348             SWI2C_SCL_LOW;
349 //              TIMER_ITERATION();
350             delay_us(dl);
351         }
352         while (bits > 0);
353
354         /* Storing the data off */
355         inputArray[ii] = temp;
356
357         /* Now the master needs to send out the ACK */
358         if(ii == size - 1)
359             SWI2C_SDA_HIGH;
360         else
```

```
361            SWI2C_SDA_LOW;
362           SWI2C_SCL_HIGH;
363
364           /*
365           * Waiting for our clock line to go high if the slave is
                stretching
366           */
367           while(!(SWI2C_PxIN & SWI2C_SCL));
368
369 //          TIMER_ITERATION();
370           delay_us(dl);
371       }
372
373 I2CReadTransactionCleanUp:
374
375       /* Sending out the stop bit */
376       SWI2C_SCL_LOW;
377       SWI2C_SDA_LOW;
378 //      TIMER_ITERATION();
379       delay_us(dl);
380       SWI2C_SCL_HIGH;
381       __no_operation();
382       SWI2C_SDA_HIGH;
383 //      TIMER_ITERATION();
384       delay_us(dl);
385
386       /* Stop the timer */
387 //      TB0CTL = MC_0;
388
389       /* If all bytes were read, return true- otherwise false. */
390       if(ii == size)
391           return true;
392       else
393           return false;
394 }
```

Listagem I.10: Código swi2c_master.c (MCU Módulo lisímetro).

```
1 /* --COPYRIGHT--,BSD
2  * Copyright (c) 2016, Texas Instruments Incorporated
3  * All rights reserved.
4  *
5  * Redistribution and use in source and binary forms, with or without
```

```
6   * modification, are permitted provided that the following conditions
7   * are met:
8   *
9   * *  Redistributions of source code must retain the above copyright
10  *    notice, this list of conditions and the following disclaimer.
11  *
12  * *  Redistributions in binary form must reproduce the above copyright
13  *    notice, this list of conditions and the following disclaimer in
        the
14  *    documentation and/or other materials provided with the
        distribution.
15  *
16  * *  Neither the name of Texas Instruments Incorporated nor the names
        of
17  *    its contributors may be used to endorse or promote products
        derived
18  *    from this software without specific prior written permission.
19  *
20  * THIS SOFTWARE IS PROVIDED BY THE COPYRIGHT HOLDERS AND CONTRIBUTORS
        "AS IS"
21  * AND ANY EXPRESS OR IMPLIED WARRANTIES, INCLUDING, BUT NOT LIMITED TO
        ,
22  * THE IMPLIED WARRANTIES OF MERCHANTABILITY AND FITNESS FOR A
        PARTICULAR
23  * PURPOSE ARE DISCLAIMED. IN NO EVENT SHALL THE COPYRIGHT OWNER OR
24  * CONTRIBUTORS BE LIABLE FOR ANY DIRECT, INDIRECT, INCIDENTAL, SPECIAL
        ,
25  * EXEMPLARY, OR CONSEQUENTIAL DAMAGES (INCLUDING, BUT NOT LIMITED TO,
26  * PROCUREMENT OF SUBSTITUTE GOODS OR SERVICES; LOSS OF USE, DATA, OR
        PROFITS;
27  * OR BUSINESS INTERRUPTION) HOWEVER CAUSED AND ON ANY THEORY OF
        LIABILITY,
28  * WHETHER IN CONTRACT, STRICT LIABILITY, OR TORT (INCLUDING NEGLIGENCE
         OR
29  * OTHERWISE) ARISING IN ANY WAY OUT OF THE USE OF THIS SOFTWARE,
30  * EVEN IF ADVISED OF THE POSSIBILITY OF SUCH DAMAGE.
31  * --/COPYRIGHT--*/
32 //
      ***********************************************************************
33
34 #include <msp430.h>
35 #include <stdbool.h>
```

```
36 #include <stdint.h>
37
38 /* Pin Definitions. These should be changed depending on the device
     that
39  * you are using.
40  */
41 #define SWI2C_SCL           BIT1
42 #define SWI2C_SDA           BIT2
43 #define SWI2C_PxDIR         P2DIR
44 #define SWI2C_PxOUT         P2OUT
45 #define SWI2C_PxIN          P2IN
46 #define SWI2C_SDA_LOW       SWI2C_PxDIR |= SWI2C_SDA
47 #define SWI2C_SDA_HIGH      SWI2C_PxDIR &= ~SWI2C_SDA
48 #define SWI2C_SCL_LOW       SWI2C_PxDIR |= SWI2C_SCL
49 #define SWI2C_SCL_HIGH      SWI2C_PxDIR &= ~SWI2C_SCL
50
51 /* Defines the buffer size to be used. This will change depending on
     your
52  * application and the size requirements for the transfer.
53  */
54
55 /* Configuration structure for performing an I2C transaction */
56 typedef struct _SWI2C_I2CTransaction
57 {
58     uint8_t             address;
59     uint_fast16_t       numWriteBytes;
60     uint8_t*            writeBuffer;
61     uint_fast16_t       numReadBytes;
62     uint8_t*            readBuffer;
63     bool                repeatedStart;
64 } SWI2C_I2CTransaction;
65
66 /* Timer period for determining the clock rate of the I2C data clock.
     Note that
67  * the timer is sourced from SMCLK and that this number is equal to the
       duration
68  * of roughly HALF a clock period. For example, if SMCLK is set to 3MHz
       and the
69  * period below is set to 15, we would end up with an I2C data rate of
70  * approximately 100Khz.
71  *
72  * In short, the I2C data rate frequency can be calculated by:
73  *
```

```
 * I2C Data Rate =      SMCLK Frequency
 *                    ------------------
 *
 *                      2 * TimerPeriod
 */
#define SWI2C_TIMER_PERIOD   15

/* Macro for a timer iteration */
/*
#define TIMER_ITERATION()              TB0CCTL0 &= ~(CCIFG);              \
                                       while(!(TB0CCTL0 & CCIFG));
*/
/* Function Prototypes */

//
    ***********************************************************************
//
//! Initializes the software I2C master. This function takes the port
//! definitions that are given above and configures the device for
    software
//! I2C operation.
//!
//! \return None
//
//
    ***********************************************************************
extern void SWI2C_initI2C(void);

//
    ***********************************************************************
//
//! Starts an I2C transaction over the configured I2C master device.
    Note that
//! this function is blocking until the transaction is completed. If a
    timeout
//! feature is required, the user should use the watchdog module of
    their MCU
//! in tandem with this function. Since the I2C slave has the ability
    to
//! "clock stretch" the module, care has to be taken to manage the real
```

```
     time
//!  behavior of the main application.
//!
//! <hr>
//! <b>Configuration options for \link SWI2C_I2CTransaction \endlink structure.</b>
//! <hr>
//!
//! \param address I2C Slave Address to communicate with.
//! \param numWriteBytes Number of bytes for the master to write
//! \param writeBuffer Pointer to the buffer to write
//! \param numReadBytes Number of bytes to read
//! \param readBuffer Pointer to the buffer to read values into
//! \param repeatedStart In the event that both a read and write operation are
//!         requested, this bool value determines if a repeated start coniditon
//!         is sent out over the bus. If set to true, no I2C STOP is sent out
//!         after the write transaction. If set to false. After the write
//!         transaction completes an I2C STOP condition is sent out, and then
//!         the I2C read transaction is treated as a completely separate
//!         transaction
//!
//! Note that any order of combinations can be passed into the transaction
//! structure. If the user wants to only perform an I2C read, then only the
//! read parameters should be populated and the write parameters should be
//! set to 0 (or vice versa for write). The user can also specify both read
//! and write bytes and use the repeatedStart parameter to specify if there
//! is an I2C STOP between the transactions. Note that the write transaction
//! is always first when using this function.
//!
//! \return true if the operation passed, false otherwise. A false return
```

```
//!      value means that the device received a NAK where one was not expected.
//
//*****************************************************************************
extern bool SWI2C_performI2CTransaction(SWI2C_I2CTransaction * i2cTransaction);
```

Listagem I.11: Código swi2c_master.h (MCU Módulo lisímetro).

I.2 SoC ESP8266

```
// https://github.com/arduino-libraries/NTPClient
#include <NTPClient.h>
// https://github.com/plapointe6/EspMQTTClient
#include <EspMQTTClient.h>
// https://github.com/evert-arias/EasyButton/
#include <EasyButton.h>
// https://github.com/tzapu/WiFiManager
#include <WiFiManager.h>

#define BUTTON_PIN 2     // Botão RST

EasyButton button(BUTTON_PIN);
WiFiManager wifiManager;
WiFiUDP ntpUDP;
NTPClient timeClient(ntpUDP, "pt.pool.ntp.org");

EspMQTTClient client(
  "lysimeter.ddnsfree.com", // Servidor MQTT
  1883,                     // Porta MQTT
  "",                       // Nome de utilizador MQTT
  "",                       // Senha MQTT
  "ESP8266"                 // Nome que identifica o dispositivo
);

void setup()
{
  Serial.begin(9600); // inicia a comunicação serie

```

```
29    wifiManager.autoConnect("AutoConnectAP");
30
31    // Inicializa o botão RST
32    button.begin();
33
34    // Ativa o evento para responder ao pressionar o botão RST
35    button.onPressed(onPressed);
36
37    // Inicia o cliente NTP
38    timeClient.begin();
39
40  }
41
42  // Função que é chamada quando o botão RST for pressionado
43  // para limpar a memoria
44  void onPressed()
45  {
46      Serial.println("Botão RST foi pressionado");
47      WiFi.disconnect(true);
48      delay(2000);
49      ESP.reset();
50  }
51
52  // Função que é chamada quando as ligações forem estabelecidas
53  // (Wifi and MQTT).
54  void onConnectionEstablished()
55  {
56    // atualiza a data logo que seja estabelecida a ligação
57    timeClient.update();
58  }
59
60  // Função que devolve uma substring de uma string com base no
61  // separador e no índice. Serve para separar os dados de cada
62  // sensor
63  String getValue(String data, char separator, int index)
64  {
65    int found = 0;
66    int strIndex[] = {0, -1};
67    int maxIndex = data.length()-1;
68
69    for(int i=0; i<=maxIndex && found<=index; i++){
70      if(data.charAt(i)==separator || i==maxIndex){
71          found++;
```

```
72          strIndex[0] = strIndex[1]+1;
73          strIndex[1] = (i == maxIndex) ? i+1 : i;
74      }
75    }
76    return found>index ? data.substring(strIndex[0], strIndex[1]) : "";
77  }
78
79  // função para converter os dados recebidos pela porta série
80  // do microcontrolador msp430 para o formato JSON para enviar
81  // por mqtt
82  String convertToJSON(String input)
83  {
84    String json = "{\"ID\":\"" + getValue(input, ' ', 0) + "\",";
85    json += "\"TIME\":\"" + String(timeClient.getEpochTime()) + "\",";
86    json += "\"STA\":\"" + getValue(input, ' ', 1) + "\",";
87    json += "\"SHA\":\"" + getValue(input, ' ', 2) + "\",";
88    json += "\"SL1\":\"" + getValue(input, ' ', 3) + "\",";
89    json += "\"SL2\":\"" + getValue(input, ' ', 4) + "\",";
90    json += "\"STS1\":\"" + getValue(input, ' ', 5) + "\",";
91    json += "\"STS2\":\"" + getValue(input, ' ', 6) + "\",";
92    json += "\"STS3\":\"" + getValue(input, ' ', 7) + "\",";
93    json += "\"SHS1\":\"" + getValue(input, ' ', 8) + "\",";
94    json += "\"SHS2\":\"" + getValue(input, ' ', 9) + "\",";
95    json += "\"SHS3\":\"" + getValue(input, ' ', 10) + "\",";
96    json += "\"SVB\":\"" + getValue(input, ' ', 11) + "\",";
97    json += "\"SPL\":\"" + getValue(input, ' ', 12) + "\",";
98    json += "\"SPR\":\"" + getValue(input, ' ', 13) + "\",";
99    json += "\"QOS\":\"" + String(signal_quality()) + "\"}";
100
101   return json;
102 }
103
104
105 int signal_quality()
106 {
107   if (WiFi.status() != WL_CONNECTED)
108     return -1;
109   int dBm = WiFi.RSSI();
110   if (dBm <= -100)
111     return 0;
112   if (dBm >= -50)
113     return 100;
114   return 2 * (dBm + 100);
```

```
}


void loop()
{
  button.read(); // verifica o estado do botão RST

  // verifica se as conexões foram feitas
  if (client.isConnected())
  {
    // Verifica se existe alguma coisa no buffer
    if(Serial.available()>0)
    {
      // lê os dados do buffer serial
      String msg = Serial.readString();

      timeClient.update(); // atualiza a data

      // publica os dados no broker mqtt
      String payload = convertToJSON(msg);
      client.publish("LISIMETRO", payload);

    }
  }

  client.loop();

}
```

Listagem I.12: Código do programa principal do ESP8266 (SoC ESP8266).

I.3 MCU do módulo da câmara

```
/*  IOT CAMERA - MIOT1819
    Autor: Carlos Almeida
 Data: 15/10/2021
*/

#include <msp430.h>
#include <stdint.h>
#include "CDC.h"
```

```
9  #include "delay.h"
10
11
12 const unsigned long pooling_time = 14400;   // Pooling time in seconds
13
14 const unsigned int t_startup = 65 ;    // Time to startup RPi (seconds)
15 const unsigned int t_shutdown = 10 ;  // Time to startup RPi (seconds)
16
17
18 unsigned long seconds;                    // Seconds counter
19
20
21 static const unsigned int ID = C1901;     // ID da Camera
22
23
24 unsigned int SVB = 0;      // Sensor Voltagem Bateria [mV]
25
26 unsigned int arraySamples[1];    // ADC samples array
27
28
29 void GPIO_Init(void);
30 void BCM_Init(void);
31 void TIMER_Init(void);
32 void USCI_A0_Init(void);
33 void ADC10_Init(void);
34 void ADC10_StartSampling(void);
35 void sendData(void);
36
37
38 void main(void)
39 {
40      WDTCTL = WDTPW | WDTHOLD;    // stop watchdog timer
41
42     seconds = pooling_time - 1;
43
44     GPIO_Init();
45     BCM_Init();
46     TIMER_Init();
47     USCI_A0_Init();
48     ADC10_Init();
49     ADC10_StartSampling();
50
51     _enable_interrupts();
```

```
52
53
54      while(1)
55      {
56          if (seconds == pooling_time) //
57          {
58              P1OUT |= BIT0;   // Power ON
59
60              seconds = 0;
61              while (seconds < t_startup);
62
63
64              //*ADC*********************************
65              ADC10_StartSampling();
66              SVB = arraySamples[0];
67              delay_ms(100); //
68              sendData();
69              seconds = 0;
70              while (seconds < t_shutdown);
71              P1OUT &= ~BIT0; // Power OFF
72          }
73
74          __low_power_mode_3();
75      }
76 }
77
78
79 void  sendData(void)
80 {
81      p_ui(ID); ec(" ");
82      p_ui(SVB); ec(" ");
83      p_ui(SCB); ec(" ");
84      LF_();
85      CR_();
86 }
87
88
89 void GPIO_Init()
90 {
91      P1OUT = (0x00);
92      // P1DIR = (0xFF);
93      P1DIR = ( BIT6 | BIT5 | BIT4 | BIT3 | BIT2 | BIT1 | BIT0); // P1DIR
            = (0xF7); BIT7->IN
```

```
94
95      // USCI:
96      P1SEL  |= (BIT2 |BIT1); // UCA0TXD , UCA0RXD
97      P1SEL2 |= (BIT2 |BIT1); // UCA0TXD , UCA0RXD
98
99
100     P1REN |= BIT7;  // enable pull-up/pull-down resistor
101     P1OUT |= BIT7;  // select pull-up resistor
102
103     P1IES |= BIT7;  // select edge interrupt high->low transition
104     P1IFG = 0x00;   // clear P1IFG since writing to P1OUT, P1DIR, P2OUT
            , or P2DIR can result in setting the corresponding P1IFG
105                         // or P2IFG flags. (slau144j pg.331)
106     P1IE |= BIT7;   // enable interrupt on P1.7
107
108 }
109
110
111
112 void BCM_Init()
113 {
114     DCOCTL = CALDCO_8MHZ;    // DCO frequency select and Modulator
            selection:
115                              // are set with factory calibrated value
116     BCSCTL1 = XT2OFF         // XT2 off
117             | CALBC1_8MHZ    // Range select: factory value for 8MHz
118             | DIVA_0;        // ACLK Divider: 0->/1, 1_>/2, 2->/4, 3->/8
119
120     BCSCTL2 = SELM_0         // Select the MCLK source: 0->DCOCLK, 1->
            DCOCLK, 2-> XT2CLK when XT2, 3->LFXT1CLK or VLOCLK
121             | DIVM_0         // MCLK Divider: 0->/1, 1_>/2, 2->/4, 3->/8
122             | DIVS_0;        // SMCLK Divider: 0->/1, 1_>/2, 2->/4,
                  3->/8:
123
124     BCSCTL3 = LFXT1S_2;      // Low-frequency clock select and LFXT1
            range: 0->Crystal 32768Hz, 2->VLOCLK, 3->Ext CLK
125 }
126
127
128 void USCI_A0_Init(void)
129 {
130     // UART Mode: 9600 8N1
131
```

```
132     UCA0CTL1 = UCSSEL_2; // USCI clock source select: SMCLK
133     // From Table 36.4 in slau144j:
134     // BRCLK Frequency (Hz)      Baud Rate    UCBRx    UCBRSx  UCBRFx
135     // 8 000 000                 9600         833      2       0
136     UCA0BR0 = 0x41;       // UCBRx = 833 = 0x341
137     UCA0BR1 = 0x03;
138     UCA0MCTL = UCBRS_2;
139     // USCI reset released for operation:
140     UCA0CTL1 &= ~ UCSWRST;
141
142     IE2 |= UCA0RXIE;      // USCI_A0 receive interrupt enable
143 }
144
145 #pragma vector = USCIAB0RX_VECTOR
146 __interrupt void USCIA0RX_ISR(void)
147 {
148     while(!(IFG2 & UCA0TXIFG));
149     UCA0TXBUF = UCA0RXBUF;
150 }
151
152
153 void TIMER_Init()
154 {
155     // Timer A0 settings for 1s counter
156     TA0CCTL0 = CCIE;      // Capture/Compare Interrupt Enable
157
158     TA0CTL = TASSEL_1     // Clock source = 0->TACLK, 1->ACLK, 2->SMCLK,
            3->INCLK
159             | MC_1        // Mode control = 1->UP / 2->CONTINUOS / 3->UP/
                DOWN
160             | ID_0;       // Divider = 0->/1, 1->/2, 2->/4, 3->/8
161     TA0CCR0 = 10350;      // Compare value: 32768 for 32768Hz crystal,
            10000 for 10KHz VLOCLK (10350 after 1s calibration)
162
163     // Timer A1 settings for PWM servo control
164     TA1CTL = TASSEL_2     // Clock source = 0->TACLK, 1->ACLK, 2->SMCLK,
            3->INCLK
165             | TACLR       // Timer_A1 clear
166             | MC_1        // Mode control = 1->UP / 2->CONTINUOS / 3->UP/
                DOWN
167             | ID_3;       // Divider = 0->/1, 1->/2, 2->/4, 3->/8
168     TA1CCR0 = 20000;       // Capture and Compare: 20000=> F=50Hz, T=20ms
169     TA1CCTL2 |= OUTMOD_7;     // Output Mode: 7-> Reset/Set
```

```
170 }
171
172
173 #pragma vector = TIMER0_A0_VECTOR
174 __interrupt void TIMER0_A0_ISR(void)
175 {
176     ++ seconds;
177     __low_power_mode_off_on_exit();
178 }
179
180
181 #pragma vector = PORT1_VECTOR
182 __interrupt void Port1_ISR(void)
183 {
184     if(P1IFG & BIT7) // switch pressed
185     {
186         seconds = pooling_time - 1;
187     }
188     P1IFG &= ~BIT7;          // clear interrupt flag of P1.3
189 }
190
191
192 void ADC10_Init(void)
193 {
194     // ADC10 Control Register 0:
195     ADC10CTL0 = SREF_1       // Select reference: VR+ = VREF+ and VR- =
            VSS
196               | ADC10SHT_0   // ADC10 sample-and-hold time: 4 ï¿½
                    ADC10CLKs
197               | ADC10SR      // ADC10 sampling rate: Reference buffer
                    supports up
198                              // to ~50 ksps
199               | REFBURST     // Reference buffer on only during
200                              // sample-and-conversion
201               | MSC          // Multiple sample and conversion
202               | REF2_5V      // Reference-generator voltage 2.5V
203               | REFON        // Reference generator on: V_REF+ takes 30
                    us to
204                              // settle (slau144j pg. 38)
205               | ADC10ON      // ADC10 on
206               | ADC10IE;      // ADC10 interrupt enable
207
208     // ADC10 Control Register 1:
```

```
209     ADC10CTL1 = INCH_6        //  Input channel selection: A6–A5–A4–A3
210               | SHS_0         //  Sample–and hold source select:
211               | ADC10DIV_3     // ADC10 clock divider: /4
212               | ADC10SSEL_0    // ADC10 clock source select: ADC10OSC – 0
213               | CONSEQ_1;      // Conversion sequence mode select:
214                                //     Sequence–of–channels (A7 – A6 – A5 –
                                      A4)
215
216
217     // Analog (Input) Enable Control Register 0:
218     ADC10AE0 |= BIT3
219               | BIT4          // ADC10 analog enable: A7 on P1.7
220               | BIT5            // ADC10 analog enable: A6 on P1.6
221               | BIT6;           //
222
223
224     // ADC10 data transfer control register 1:
225     ADC10DTC1 = 4;         // Define the number of transfers: 4 values
226 }
227
228
229 void ADC10_StartSampling(void)
230 {
231 //     while (ADC10CTL1 & ADC10BUSY);  // Wait if ADC10 core is active
232     // ADC10 data transfer start address:
233
234     ADC10SA = (unsigned int) arraySamples; // ADC10 start address
235     ADC10CTL0 |= ENC        // Enable conversion
236                | ADC10SC;
237     delay_ms(1);
238 }
239
240 #pragma vector = ADC10_VECTOR
241 __interrupt void ADC10_ISR(void)
242 {
243
244    ADC10CTL0 &= ~ENC;
245    __low_power_mode_off_on_exit();
246 }
```

Listagem I.13: Código main.c MCU (Módulo câmara).

I.4 SBC RPi

```

import time
import os
from camera import takePhoto
from copyimage import copyImage
from time import sleep
from shut_down  import shut_d
from mqtt import mqtt



def main():

 try:
  takePhoto()
 except Exception as e:
  print("type error: " + str(e) + " Problema com a câmara!")
 try:
  copyImage()
 except Exception as f:
  print("type error: " + str(f) + " Problema com SSH!")

    try:
  mqtt()
 except Exception as e:
  print("type error: " + str(e) + " Problema com MQTT!")

    shut_d()

if __name__ == "__main__":
   main()
```

Listagem I.14: Código start.py SBC

```
#!/usr/bin/env python
from picamera import PiCamera
from time import sleep
import datetime
from copyimage import copyImage

PATH = "/home/pi/lysimeter/image/"
```

```
8
9 def takePhoto():
10     camera = PiCamera()
11     name_photo = datetime.datetime.now().strftime('%Y%m%d-%H%M%S.jpg')
12     print("Start image capture, wait")
13     sleep(5) # Time to adjust image
14     try:
15 #         print("Iniciar captura")
16         camera.resolution = (3280, 2464)
17         camera.capture(PATH + " " + name_photo)
18 #         print("Fim de captura")
19  #        sleep(1)
20     except Exception as e:
21         print("type error: " + str(e))
22     print("End capture")
23
24 def main():
25     takePhoto()
26
27
28 if __name__ == "__main__":
29     main()
```

Listagem I.15: Código camera.py SBC.

```
1 #!/usr/bin/python
2 import os
3
4 HOST = "lisimetro@lysimeter.ddnsfree.com:"
5 PORT = "22"
6 LOCAL_PATH = "/home/pi/lysimeter/image/"
7 SERVER_PATH = "/home/lisimetro/image"
8
9 def copyImage():
10     print("scp -P "+ PORT + " " + LOCAL_PATH + "*.jpg " + HOST +
       SERVER_PATH)
11     os.system("scp -P " + PORT + " " + LOCAL_PATH + "*.jpg " + HOST +
       SERVER_PATH)
12     os.system("rm " + LOCAL_PATH + "*.jpg")
13     print("Done - File in server!")
14
15 def main():
16     copyImage()
```

```
17
18 if __name__ == "__main__":
19     main()
```

Listagem I.16: Código copyimage.py SBC.

```
1 import time
2 import paho.mqtt.client as paho
3 import serial
4 import re
5 import json
6 import os
7 from datetime import datetime
8 from camera import takePhoto
9
10 # this port address is for the serial tx/rx pins on the GPIO header
11 SERIAL_PORT = "/dev/ttyS0"
12 # be sure to set this to the same rate used on the Arduino
13 SERIAL_RATE = 9600
14
15
16 def mqtt(data):
17
18     keys = ["ID", "SVB"]
19     values = re.split("\s+", data)
20     values = [x for x in values if x]  # remove null items
21     new_dict = dict(zip(keys, values))
22     new_dict["TIME"] = str(datetime.now())
23     print("received message =", new_dict)
24     new_dict["SL"] = str(get_signal_level(wlan0))
25     topic = "CAMARA"
26     print("TOPIC: ", topic)
27     data = {
28         "ID": new_dict["ID"],
29         "TIME": new_dict["TIME"],
30         "SVB": new_dict["SVB"],
31         "SL": new_dict["SL"],
32     }
33
34     data = json.dumps(data, ensure_ascii=True)
35     print("JSON DUMP =", data)
36     broker = "lysimeter.ddnsfree.com"
37     # reading is a string...do whatever you want from here
```

```
38      client = paho.Client("client-001")
39      print("connecting to broker ", broker)
40      client.connect(broker, 1883, 60)  # connect
41      client.loop_start()  # start loop to process received messages
42      client.subscribe(topic)  # subscribe
43      client.publish(topic, data)  # publish
44
45
46  def main():
47      print("A espera de dados porta série")
48      ser = serial.Serial(SERIAL_PORT, SERIAL_RATE)
49      while True:
50          # using ser.readline() assumes each line contains a single
              reading
51          # sent using Serial.println()
52          reading = ser.readline().decode("utf-8")
53          mqtt(reading)
54
55
56  if __name__ == "__main__":
57      main()
```

Listagem I.17: Código mqtt.py SBC.

```
1  import time
2  import os
3
4  def shut_d():
5   print("The system will shutdown in 10s (Ctrl + C to cancel)")
6   for i in xrange(10, 0, -1):
7    time.sleep(1)
8    print(i)
9   os.system("sudo shutdown now")
10
11 def main():
12  shut_d()
13
14 if __name__ == "__main__":
15     main()
```

Listagem I.18: Código shutd.py SBC.

I.5 Node-Red

```
var ID = {"payload": msg.payload.ID};

var TA = {"payload": msg.payload.TA};
var HA = {"payload": msg.payload.HA};
var L1 = {"payload": msg.payload.L1};
var L2 = {"payload": msg.payload.L2};

var TS1 = {"payload": msg.payload.TS1};
var TS2 = {"payload": msg.payload.TS2};
var TS3 = {"payload": msg.payload.TS3};


var HS1 = SHS_convert(parseInt(msg.payload.HS1))
var HS2 = SHS_convert(parseInt(msg.payload.HS2))
var HS3 = SHS_convert(parseInt(msg.payload.HS3))


var PL = {"payload": msg.payload.PL};
var PR = {"payload": msg.payload.PR};

var VB = SVB_convert(parseFloat(msg.payload.VB));

var T = {"payload": msg.payload.T};


function SHS_convert(SHS){  // Converte a saida ADC em percentagem de humidade
    var aux = parseInt((-0.3052*SHS)+ 258.29);     //(SHS*(-1.3585)+809)
    if (aux > 100 ) aux = 100;
    if (aux < 0) aux = 0;
    return {"payload": aux.toString()};
}

function SVB_convert(SVB){ // Converte saida ADC na tensao da bateria em milivolts
    return {"payload": parseInt((SVB * 5.0)).toString()};
}

var NS = {"payload": msg.payload.NS};


```

```
40 return [TA, HA, L1, L2, TS1, TS2, TS3, HS1, HS2, HS3, PL, PR, VB, T, ID
       , NS];
```

Listagem I.19: Código Data.js

Apêndice II

Esquemas elétricos / Desenhos PCB

II.1 Esquema elétrico do módulo lisímetro.
II.2 Esquema elétrico do módulo câmara.
II.3 Aspeto da parte frontal da PCB (KiCad).
II.4 Aspeto da parte traseira da PCB (KiCad).

II.1 Esquema Elétrico do Módulo Lisímetro

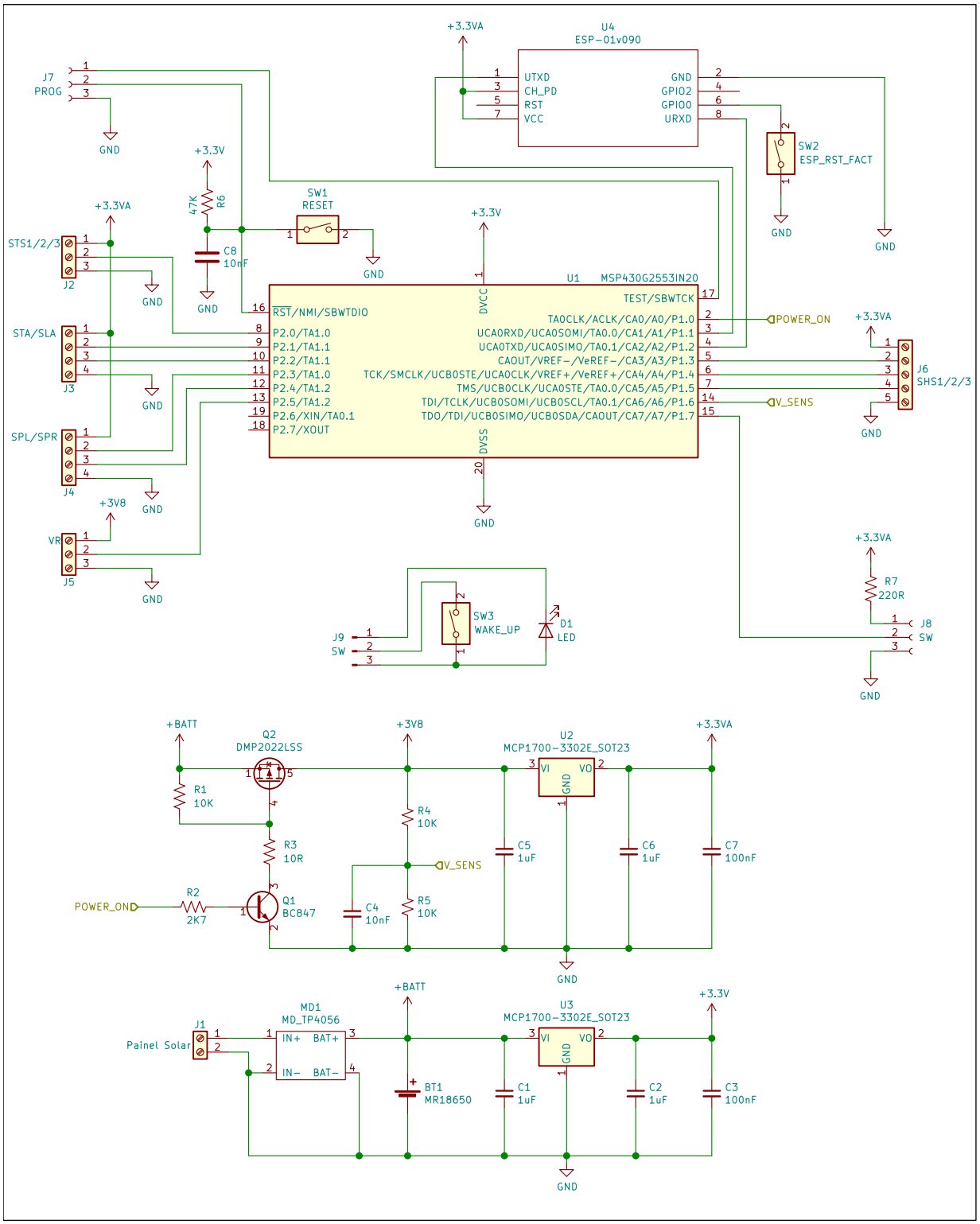

II.2 Esquema Elétrico do Módulo Câmara

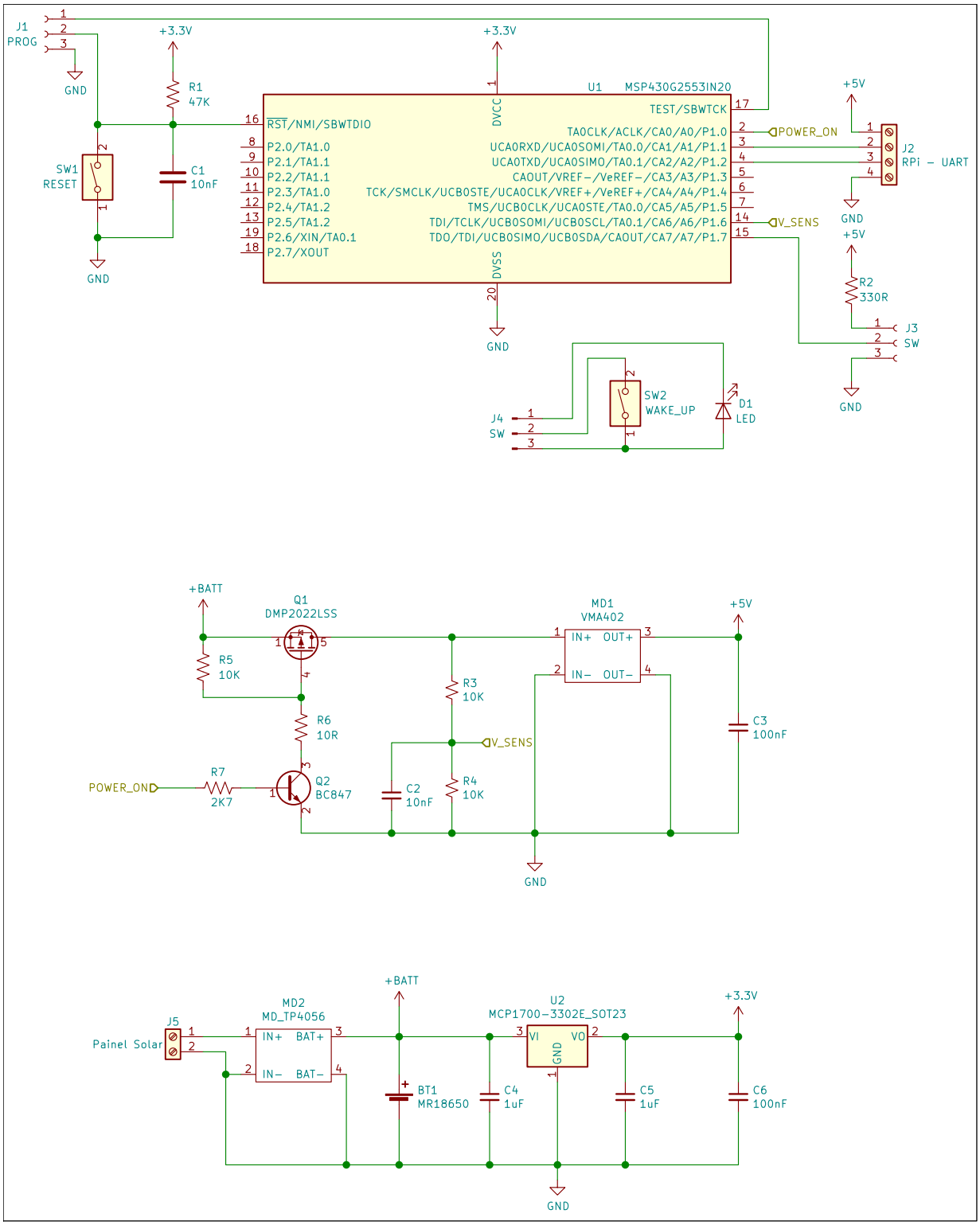

II.3 Parte frontal da PCB câmara (KiCad)

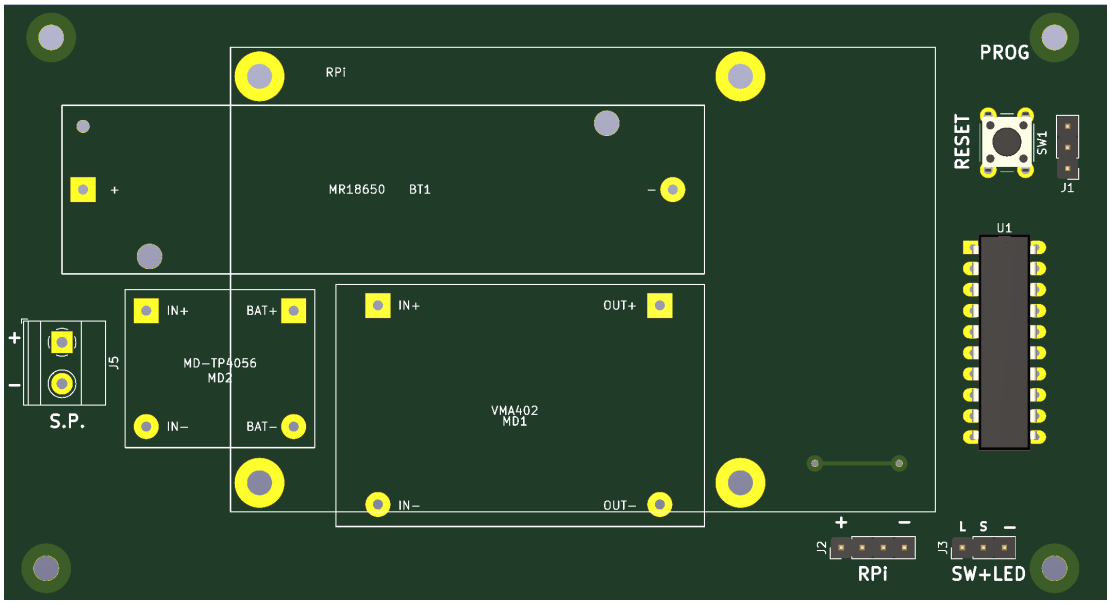

II.4 Parte traseira da PCB câmara (KiCad)

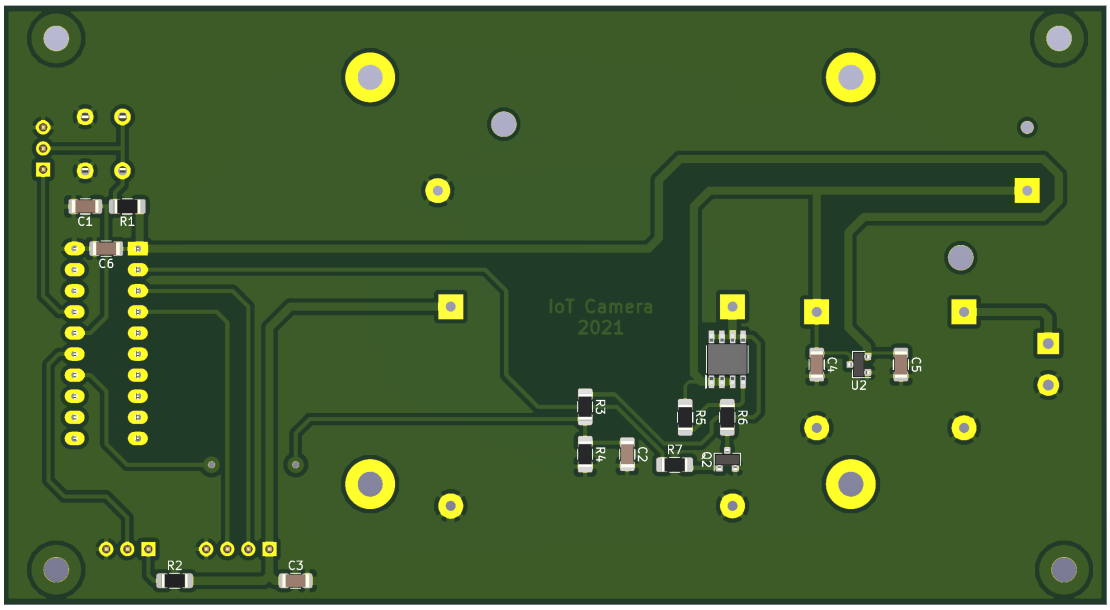

Apêndice III

Custo de implementação

Orçamento de componentes para construção do prototipo

Tabela III.1: Cotação de material para o módulo lisímetro.

Qt.	Descrição	P.Unit.	Valor
1	MCU MSP430G2553 - DIP20	2.35€	2.35€
1	Módulo ESP8266 - ESP01	4.55€	4.55€
1	Placa Circuito Impresso Perfurada	7.47€	7.47€
1	Transistor DMP2022	1.20€	1.20€
1	Transistor BC847	0.10€	0.10€
2	Regulador de Tensão MCP1700-3302E	0.90€	1.80€
8	Resistências de carvão 1/4W	0.15€	1.20€
6	Condensadores 10nF 50V	0.15€	0.90€
2	Condensadores 100nF 50V	0.18€	0.36€
4	Condensadores 1uF 50V	0.22€	0.88€
2	Interrutor de pressão PCB	0.17€	0.34€
15	CABO LiYCY-DIN 4x0,50	0.97€	14.55€
4	Blocos 3 terminais	0.25€	1.00€
5	Blocos 2 terminais	0.18€	0.90 €
1	Painel solar 5V 1W	4.75€	4.75€
1	Bateria Li-Ion MR18650 3,6V 3500mAh	8.75€	8.75€
1	Módulo controlador de carga TP4056	1.96€	1.96€
1	Suporte bateria MR18650 c/ fios	1.75€	1.75€
1	Módulo sensor Temp/Humidade SHT30	19.25€	19.25€
1	Módulo sensor luminosidade TLS2561	4.80€	4.80€
3	Sensor temperatura DS18B20 - IP67	9.30€	27.90€
3	Sensor de humidade solo capacitivo	8.20€	24.60€
1	Módulo HX711	4.95€	4.95€
4	Células de carga 1/2 Ponte 0-50Kg	9.50€	38.00€
1	Células de carga 0-10Kg	13.50€	13.50€
1	Servo motor HiTEC HS-422	11.81€	11.81€
1	Caixa IP65 82.1x158.5x55mm	4.02€	4.02€
1	Caixa IP65 50x70x36mm	2.03€	2.03€
4	Caixa IP65 40x64x30mm	1.89€	7.56€
16	Bucins PG7 - IP65	1.02€	16.32€
1	Vaso Polietileno 25L	6.80€	6.80€
1	Recipiente plástico 1,5L	1.95€	1.95€
		Total	**238.30€**

Tabela III.2: Cotação de material para o módulo câmara.

Qt.	Descrição	P.Unit.	Valor
1	SBC Raspberry Pi 3B+	39.90€	39.90€
1	Cartão SD 16GB	6.00€	6.00€
1	Módulo câmara Raspberry Pi V2	27.57€	27.57€
1	MCU MSP430G2553 - DIP20	2.35€	2.35€
1	Placa de circuito impresso 1 face	4.90€	4.90€
1	Transistor DMP2022	1.20€	1.20€
1	Transistor BC847	0.10€	0.10€
1	Regulador de Tensão MCP1700-3302E	0.90€	1.80€
1	Módulo conversor DC/DC VMA402	9.90€	9.90€
7	Resistências SMD	0.10€	0.70€
8	Condensadores SMD	0.26€	2.08€
1	Interruptor de pressão PCB	0.17€	0.34€
1	Blocos 2 terminais	0.18€	0.90€
1	Painel solar 5V 1W	4.75€	4.75€
1	Bateria Li-Ion MR18650 3,6V 3500mAh	8.75€	8.75€
1	Módulo controlador de carga TP4056	1.96€	1.96€
1	Suporte bateria MR18650 PCB	3.26€	3.26€
1	Caixa IP65 82.1x158.5x55mm	4.02€	4.02€
		Total	**118.69€**

Anexos

Anexo I

Datasheets dos componentes

1. MCU: 01-MSP430g2550.pdf
2. SoC: 02-ESP-01.pdf
3. Sensor de temperatura e humidade: 03-SHT3x.pdf
4. Sensor de luminosidade: 04-TSL2561.pdf
5. Sensor de temperatura: 05-DS18B20.pdf
6. Sensor de humidade do solo: 06-CMSC.pdf
7. Sensor de peso 1/2 ponte: 07-Loadsensor.pdf
8. Conversor ADC p/ sensores de peso: 08-HX711.pdf
9. Sensor peso ponte completa: 09-TAL220M4M5.pdf
10. Servo-motor: 10-HS422.pdf
11. Controlador de carga da bateria: 11-TP4096.pdf
12. Bateria Li-Ion: 12-INR8650-35e.pdf
13. Transístor P-Mosfet : 13-DMP2022LSS.pdf
14. Transístor NPN: 14-BC847-D.pdf
15. Regulador de tensão: 15-MCP1700-330.pdf
16. Placa de desenvolvimento: 16-MSP430-EXP430G2ET.pdf

17. Placa programação SoC: 17-SBC-ESP8266-Prog.pdf
18. SBC: 18-RPi3b+.pdf
19. Conversor DC/DC : 19-LM2577.pdf

MIXED SIGNAL MICROCONTROLLER

FEATURES

- Low Supply-Voltage Range: 1.8 V to 3.6 V
- Ultra-Low Power Consumption
  - Active Mode: 230 µA at 1 MHz, 2.2 V
  - Standby Mode: 0.5 µA
  - Off Mode (RAM Retention): 0.1 µA
- Five Power-Saving Modes
- Ultra-Fast Wake-Up From Standby Mode in Less Than 1 µs
- 16-Bit RISC Architecture, 62.5-ns Instruction Cycle Time
- Basic Clock Module Configurations
  - Internal Frequencies up to 16 MHz With Four Calibrated Frequency
  - Internal Very-Low-Power Low-Frequency (LF) Oscillator
  - 32-kHz Crystal
  - External Digital Clock Source
- Two 16-Bit Timer_A With Three Capture/Compare Registers
- Up to 24 Capacitive-Touch Enabled I/O Pins
- Universal Serial Communication Interface (USCI)
  - Enhanced UART Supporting Auto Baudrate Detection (LIN)
  - IrDA Encoder and Decoder
  - Synchronous SPI
  - I^2C™
- On-Chip Comparator for Analog Signal Compare Function or Slope Analog-to-Digital (A/D) Conversion
- 10-Bit 200-ksps Analog-to-Digital (A/D) Converter With Internal Reference, Sample-and-Hold, and Autoscan (See Table 1)
- Brownout Detector
- Serial Onboard Programming, No External Programming Voltage Needed, Programmable Code Protection by Security Fuse
- On-Chip Emulation Logic With Spy-Bi-Wire Interface
- Family Members are Summarized in Table 1
- Package Options
  - TSSOP: 20 Pin, 28 Pin
  - PDIP: 20 Pin
  - QFN: 32 Pin
- For Complete Module Descriptions, See the *MSP430x2xx Family User's Guide* (SLAU144)

DESCRIPTION

The Texas Instruments MSP430 family of ultra-low-power microcontrollers consists of several devices featuring different sets of peripherals targeted for various applications. The architecture, combined with five low-power modes, is optimized to achieve extended battery life in portable measurement applications. The device features a powerful 16-bit RISC CPU, 16-bit registers, and constant generators that contribute to maximum code efficiency. The digitally controlled oscillator (DCO) allows wake-up from low-power modes to active mode in less than 1 µs.

The MSP430G2x13 and MSP430G2x53 series are ultra-low-power mixed signal microcontrollers with built-in 16-bit timers, up to 24 I/O capacitive-touch enabled pins, a versatile analog comparator, and built-in communication capability using the universal serial communication interface. In addition the MSP430G2x53 family members have a 10-bit analog-to-digital (A/D) converter. For configuration details see Table 1.

Typical applications include low-cost sensor systems that capture analog signals, convert them to digital values, and then process the data for display or for transmission to a host system.

Please be aware that an important notice concerning availability, standard warranty, and use in critical applications of Texas Instruments semiconductor products and disclaimers thereto appears at the end of this data sheet.

PRODUCTION DATA information is current as of publication date. Products conform to specifications per the terms of the Texas Instruments standard warranty. Production processing does not necessarily include testing of all parameters.

Copyright © 2011–2013, Texas Instruments Incorporated

Table 1. Available Options (1) (2)

Device	BSL	EEM	Flash (KB)	RAM (B)	Timer_A	COMP_A+ Channel	ADC10 Channel	USCI_A0, USCI_B0	Clock	I/O	Package Type
MSP430G2553IRHB32	1	1	16	512	2x TA3	8	8	1	LF, DCO, VLO	24	32-QFN
MSP430G2553IPW28										24	28-TSSOP
MSP430G2553IPW20										16	20-TSSOP
MSP430G2553IN20										16	20-PDIP
MSP430G2453IRHB32	1	1	8	512	2x TA3	8	8	1	LF, DCO, VLO	24	32-QFN
MSP430G2453IPW28										24	28-TSSOP
MSP430G2453IPW20										16	20-TSSOP
MSP430G2453IN20										16	20-PDIP
MSP430G2353IRHB32	1	1	4	256	2x TA3	8	8	1	LF, DCO, VLO	24	32-QFN
MSP430G2353IPW28										24	28-TSSOP
MSP430G2353IPW20										16	20-TSSOP
MSP430G2353IN20										16	20-PDIP
MSP430G2253IRHB32	1	1	2	256	2x TA3	8	8	1	LF, DCO, VLO	24	32-QFN
MSP430G2253IPW28										24	28-TSSOP
MSP430G2253IPW20										16	20-TSSOP
MSP430G2253IN20										16	20-PDIP
MSP430G2153IRHB32	1	1	1	256	2x TA3	8	8	1	LF, DCO, VLO	24	32-QFN
MSP430G2153IPW28										24	28-TSSOP
MSP430G2153IPW20										16	20-TSSOP
MSP430G2153IN20										16	20-PDIP
MSP430G2513IRHB32	1	1	16	512	2x TA3	8	-	1	LF, DCO, VLO	24	32-QFN
MSP430G2513IPW28										24	28-TSSOP
MSP430G2513IPW20										16	20-TSSOP
MSP430G2513IN20										16	20-PDIP
MSP430G2413IRHB32	1	1	8	512	2x TA3	8	-	1	LF, DCO, VLO	24	32-QFN
MSP430G2413IPW28										24	28-TSSOP
MSP430G2413IPW20										16	20-TSSOP
MSP430G2413IN20										16	20-PDIP
MSP430G2313IRHB32	1	1	4	256	2x TA3	8	-	1	LF, DCO, VLO	24	32-QFN
MSP430G2313IPW28										24	28-TSSOP
MSP430G2313IPW20										16	20-TSSOP
MSP430G2313IN20										16	20-PDIP
MSP430G2213IRHB32	1	1	2	256	2x TA3	8	-	1	LF, DCO, VLO	24	32-QFN
MSP430G2213IPW28										24	28-TSSOP
MSP430G2213IPW20										16	20-TSSOP
MSP430G2213IN20										16	20-PDIP

(1) For the most current package and ordering information, see the Package Option Addendum at the end of this document, or see the TI web site at www.ti.com.
(2) Package drawings, thermal data, and symbolization are available at www.ti.com/packaging.

Copyright © 2011–2013, Texas Instruments Incorporated

Device Pinout, MSP430G2x13 and MSP430G2x53, 20-Pin Devices, TSSOP and PDIP

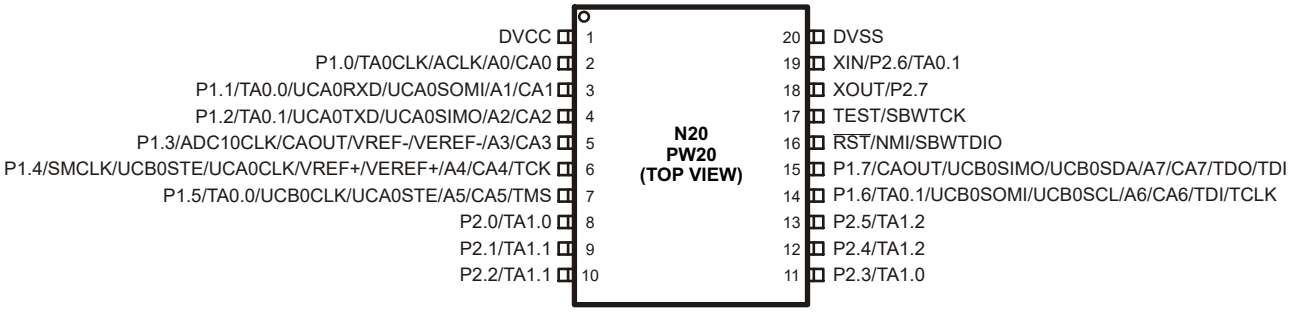

NOTE: ADC10 is available on MSP430G2x53 devices only.

NOTE: The pulldown resistors of port P3 should be enabled by setting P3REN.x = 1.

Device Pinout, MSP430G2x13 and MSP430G2x53, 28-Pin Devices, TSSOP

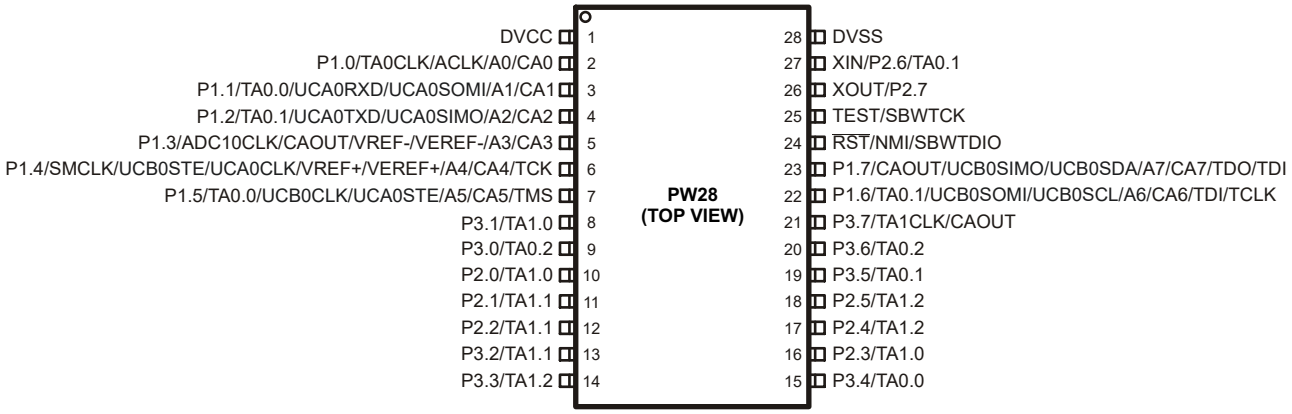

NOTE: ADC10 is available on MSP430G2x53 devices only.

Copyright © 2011–2013, Texas Instruments Incorporated

Device Pinout, MSP430G2x13 and MSP430G2x53, 32-Pin Devices, QFN

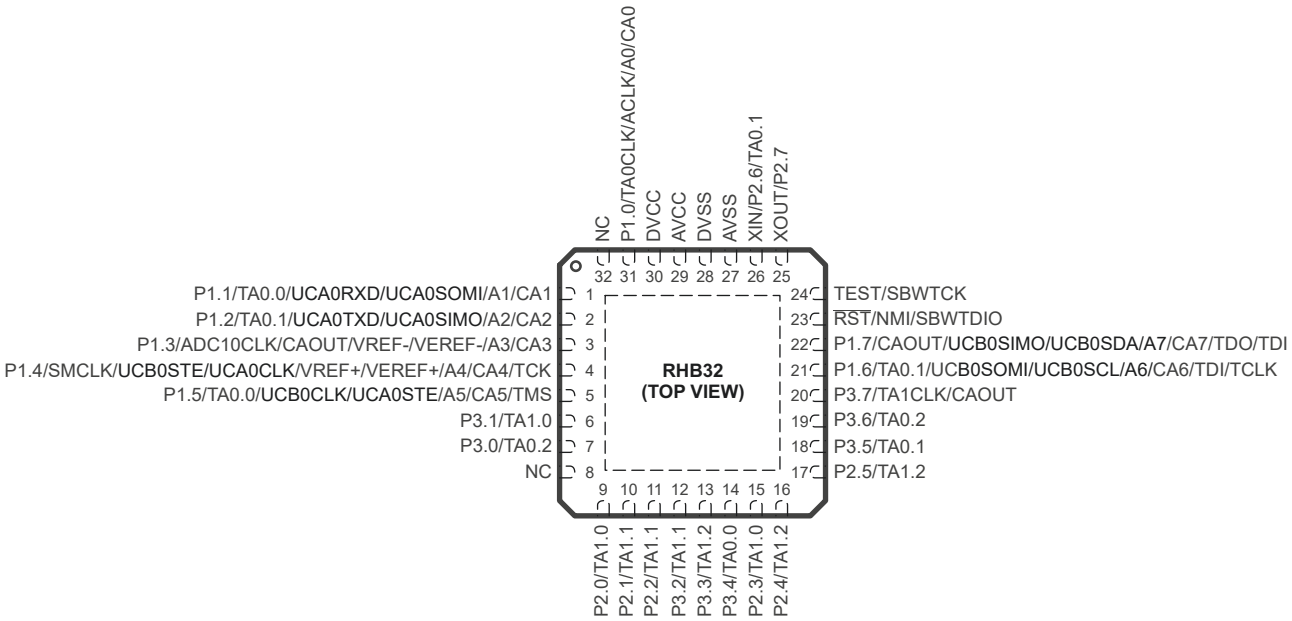

NOTE: ADC10 is available on MSP430G2x53 devices only.

Copyright © 2011–2013, Texas Instruments Incorporated

Functional Block Diagram, MSP430G2x53

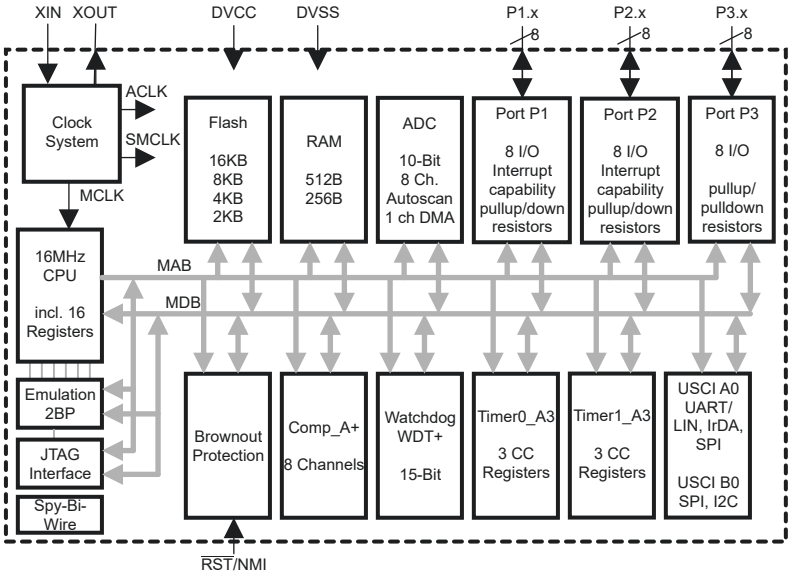

NOTE: Port P3 is available on 28-pin and 32-pin devices only.

Functional Block Diagram, MSP430G2x13

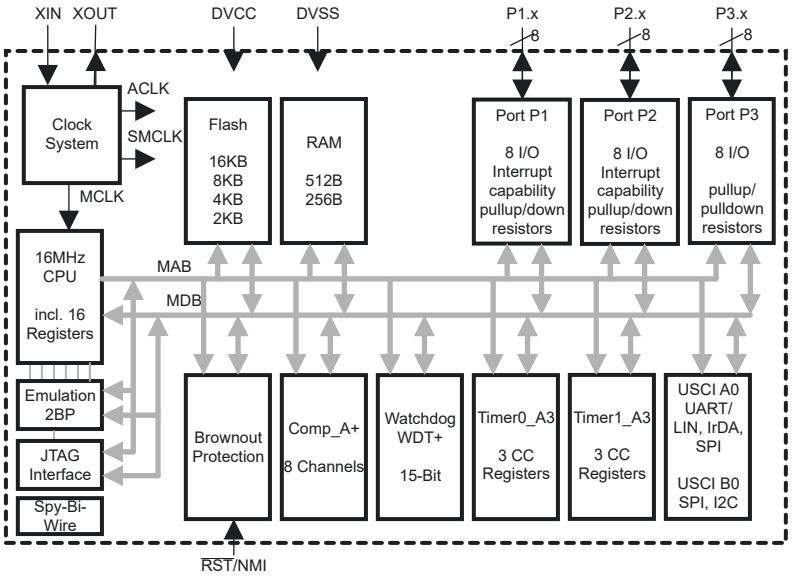

NOTE: Port P3 is available on 28-pin and 32-pin devices only.

Table 2. Terminal Functions

TERMINAL				I/O	DESCRIPTION
NAME	NO.				
	PW20, N20	PW28	RHB32		
P1.0/ TA0CLK/ ACLK/ A0 CA0	2	2	31	I/O	General-purpose digital I/O pin Timer0_A, clock signal TACLK input ACLK signal output ADC10 analog input A0 (1) Comparator_A+, CA0 input
P1.1/ TA0.0/ UCA0RXD/ UCA0SOMI/ A1/ CA1	3	3	1	I/O	General-purpose digital I/O pin Timer0_A, capture: CCI0A input, compare: Out0 output / BSL transmit USCI_A0 UART mode: receive data input USCI_A0 SPI mode: slave data out/master in ADC10 analog input A1 (1) Comparator_A+, CA1 input
P1.2/ TA0.1/ UCA0TXD/ UCA0SIMO/ A2/ CA2	4	4	2	I/O	General-purpose digital I/O pin Timer0_A, capture: CCI1A input, compare: Out1 output USCI_A0 UART mode: transmit data output USCI_A0 SPI mode: slave data in/master out ADC10 analog input A2 (1) Comparator_A+, CA2 input
P1.3/ ADC10CLK/ A3/ VREF-/VEREF-/ CA3/ CAOUT	5	5	3	I/O	General-purpose digital I/O pin ADC10, conversion clock output (1) ADC10 analog input A3 (1) ADC10 negative reference voltage (1) Comparator_A+, CA3 input Comparator_A+, output
P1.4/ SMCLK/ UCB0STE/ UCA0CLK/ A4/ VREF+/VEREF+/ CA4/ TCK	6	6	4	I/O	General-purpose digital I/O pin SMCLK signal output USCI_B0 slave transmit enable USCI_A0 clock input/output ADC10 analog input A4 (1) ADC10 positive reference voltage (1) Comparator_A+, CA4 input JTAG test clock, input terminal for device programming and test
P1.5/ TA0.0/ UCB0CLK/ UCA0STE/ A5/ CA5/ TMS	7	7	5	I/O	General-purpose digital I/O pin Timer0_A, compare: Out0 output / BSL receive USCI_B0 clock input/output USCI_A0 slave transmit enable ADC10 analog input A5 (1) Comparator_A+, CA5 input JTAG test mode select, input terminal for device programming and test

(1) MSP430G2x53 devices only

Copyright © 2011–2013, Texas Instruments Incorporated

Table 2. Terminal Functions (continued)

TERMINAL				I/O	DESCRIPTION
NAME	NO.				
	PW20, N20	PW28	RHB32		
P1.6/ TA0.1/ A6/ CA6/ UCB0SOMI/ UCB0SCL/ TDI/TCLK	14	22	21	I/O	General-purpose digital I/O pin Timer0_A, compare: Out1 output ADC10 analog input A6 (1) Comparator_A+, CA6 input USCI_B0 SPI mode: slave out master in USCI_B0 I2C mode: SCL I2C clock JTAG test data input or test clock input during programming and test
P1.7/ A7/ CA7/ CAOUT/ UCB0SIMO/ UCB0SDA/ TDO/TDI	15	23	22	I/O	General-purpose digital I/O pin ADC10 analog input A7 (1) Comparator_A+, CA7 input Comparator_A+, output USCI_B0 SPI mode: slave in master out USCI_B0 I2C mode: SDA I2C data JTAG test data output terminal or test data input during programming and test (2)
P2.0/ TA1.0	8	10	9	I/O	General-purpose digital I/O pin Timer1_A, capture: CCI0A input, compare: Out0 output
P2.1/ TA1.1	9	11	10	I/O	General-purpose digital I/O pin Timer1_A, capture: CCI1A input, compare: Out1 output
P2.2/ TA1.1	10	12	11	I/O	General-purpose digital I/O pin Timer1_A, capture: CCI1B input, compare: Out1 output
P2.3/ TA1.0	11	16	15	I/O	General-purpose digital I/O pin Timer1_A, capture: CCI0B input, compare: Out0 output
P2.4/ TA1.2	12	17	16	I/O	General-purpose digital I/O pin Timer1_A, capture: CCI2A input, compare: Out2 output
P2.5/ TA1.2	13	18	17	I/O	General-purpose digital I/O pin Timer1_A, capture: CCI2B input, compare: Out2 output
XIN/ P2.6/ TA0.1	19	27	26	I/O	Input terminal of crystal oscillator General-purpose digital I/O pin Timer0_A, compare: Out1 output
XOUT/ P2.7	18	26	25	I/O	Output terminal of crystal oscillator (3) General-purpose digital I/O pin
P3.0/ TA0.2	-	9	7	I/O	General-purpose digital I/O pin Timer0_A, capture: CCI2A input, compare: Out2 output
P3.1/ TA1.0	-	8	6	I/O	General-purpose digital I/O pin Timer1_A, compare: Out0 output
P3.2/ TA1.1	-	13	12	I/O	General-purpose digital I/O pin Timer1_A, compare: Out1 output
P3.3/ TA1.2	-	14	13	I/O	General-purpose digital I/O Timer1_A, compare: Out2 output
P3.4/ TA0.0	-	15	14	I/O	General-purpose digital I/O Timer0_A, compare: Out0 output

(2) TDO or TDI is selected via JTAG instruction.
(3) If XOUT/P2.7 is used as an input, excess current flows until P2SEL.7 is cleared. This is due to the oscillator output driver connection to this pad after reset.

Copyright © 2011–2013, Texas Instruments Incorporated

Table 2. Terminal Functions (continued)

TERMINAL				I/O	DESCRIPTION
NAME	NO.				
	PW20, N20	PW28	RHB32		
P3.5/ TA0.1	-	19	18	I/O	General-purpose digital I/O Timer0_A, compare: Out1 output
P3.6/ TA0.2	-	20	19	I/O	General-purpose digital I/O Timer0_A, compare: Out2 output
P3.7/ TA1CLK/ CAOUT	-	21	20	I/O	General-purpose digital I/O Timer1_A, clock signal TACLK input Comparator_A+, output
$\overline{\text{RST}}$/ NMI/ SBWTDIO	16	24	23	I	Reset Nonmaskable interrupt input Spy-Bi-Wire test data input/output during programming and test
TEST/ SBWTCK	17	25	24	I	Selects test mode for JTAG pins on Port 1. The device protection fuse is connected to TEST. Spy-Bi-Wire test clock input during programming and test
AVCC	NA	NA	29	NA	Analog supply voltage
DVCC	1	1	30	NA	Digital supply voltage
DVSS	20	28	27, 28	NA	Ground reference
NC	NA	NA	8, 32	NA	Not connected
QFN Pad	NA	NA	Pad	NA	QFN package pad. Connection to VSS is recommended.

Copyright © 2011–2013, Texas Instruments Incorporated

SHORT-FORM DESCRIPTION

CPU

The MSP430 CPU has a 16-bit RISC architecture that is highly transparent to the application. All operations, other than program-flow instructions, are performed as register operations in conjunction with seven addressing modes for source operand and four addressing modes for destination operand.

The CPU is integrated with 16 registers that provide reduced instruction execution time. The register-to-register operation execution time is one cycle of the CPU clock.

Four of the registers, R0 to R3, are dedicated as program counter, stack pointer, status register, and constant generator, respectively. The remaining registers are general-purpose registers.

Peripherals are connected to the CPU using data, address, and control buses, and can be handled with all instructions.

The instruction set consists of the original 51 instructions with three formats and seven address modes and additional instructions for the expanded address range. Each instruction can operate on word and byte data.

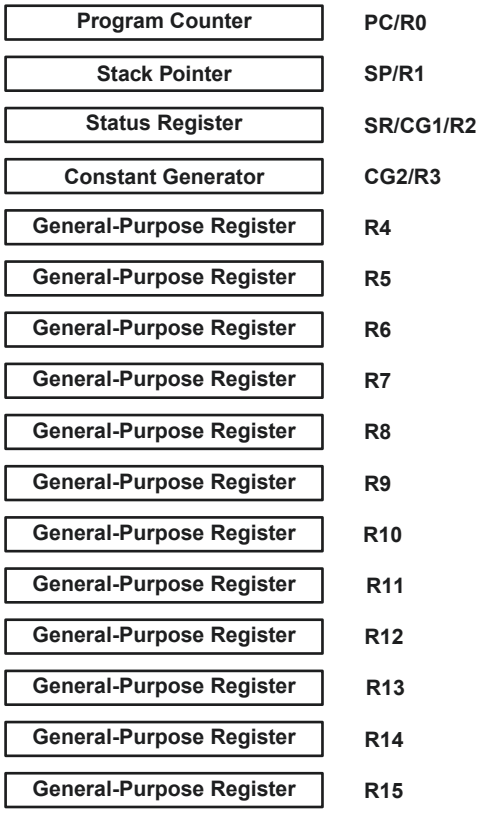

Instruction Set

The instruction set consists of 51 instructions with three formats and seven address modes. Each instruction can operate on word and byte data. Table 3 shows examples of the three types of instruction formats; Table 4 shows the address modes.

Table 3. Instruction Word Formats

INSTRUCTION FORMAT	EXAMPLE	OPERATION
Dual operands, source-destination	ADD R4,R5	R4 + R5 ---> R5
Single operands, destination only	CALL R8	PC -->(TOS), R8--> PC
Relative jump, un/conditional	JNE	Jump-on-equal bit = 0

Table 4. Address Mode Descriptions (1)

ADDRESS MODE	S	D	SYNTAX	EXAMPLE	OPERATION
Register	✓	✓	MOV Rs,Rd	MOV R10,R11	R10 -- --> R11
Indexed	✓	✓	MOV X(Rn),Y(Rm)	MOV 2(R5),6(R6)	M(2+R5) -- --> M(6+R6)
Symbolic (PC relative)	✓	✓	MOV EDE,TONI		M(EDE) -- --> M(TONI)
Absolute	✓	✓	MOV &MEM,&TCDAT		M(MEM) -- --> M(TCDAT)
Indirect	✓		MOV @Rn,Y(Rm)	MOV @R10,Tab(R6)	M(R10) -- --> M(Tab+R6)
Indirect autoincrement	✓		MOV @Rn+,Rm	MOV @R10+,R11	M(R10) -- --> R11 R10 + 2-- --> R10
Immediate	✓		MOV #X,TONI	MOV #45,TONI	#45 -- --> M(TONI)

(1) S = source, D = destination

Copyright © 2011–2013, Texas Instruments Incorporated

Operating Modes

The MSP430 has one active mode and five software selectable low-power modes of operation. An interrupt event can wake up the device from any of the low-power modes, service the request, and restore back to the low-power mode on return from the interrupt program.

The following six operating modes can be configured by software:

- Active mode (AM)
  - All clocks are active
- Low-power mode 0 (LPM0)
  - CPU is disabled
  - ACLK and SMCLK remain active, MCLK is disabled
- Low-power mode 1 (LPM1)
  - CPU is disabled
  - ACLK and SMCLK remain active, MCLK is disabled
  - DCO's dc generator is disabled if DCO not used in active mode
- Low-power mode 2 (LPM2)
  - CPU is disabled
  - MCLK and SMCLK are disabled
  - DCO's dc generator remains enabled
  - ACLK remains active
- Low-power mode 3 (LPM3)
  - CPU is disabled
  - MCLK and SMCLK are disabled
  - DCO's dc generator is disabled
  - ACLK remains active
- Low-power mode 4 (LPM4)
  - CPU is disabled
  - ACLK is disabled
  - MCLK and SMCLK are disabled
  - DCO's dc generator is disabled
  - Crystal oscillator is stopped

Copyright © 2011–2013, Texas Instruments Incorporated

Interrupt Vector Addresses

The interrupt vectors and the power-up starting address are located in the address range 0FFFFh to 0FFC0h. The vector contains the 16-bit address of the appropriate interrupt handler instruction sequence.

If the reset vector (located at address 0FFFEh) contains 0FFFFh (for example, flash is not programmed), the CPU goes into LPM4 immediately after power-up.

Table 5. Interrupt Sources, Flags, and Vectors

INTERRUPT SOURCE	INTERRUPT FLAG	SYSTEM INTERRUPT	WORD ADDRESS	PRIORITY
Power-Up External Reset Watchdog Timer+ Flash key violation PC out-of-range(1)	PORIFG RSTIFG WDTIFG KEYV(2)	Reset	0FFFEh	31, highest
NMI Oscillator fault Flash memory access violation	NMIIFG OFIFG ACCVIFG(2)(3)	(non)-maskable (non)-maskable (non)-maskable	0FFFCh	30
Timer1_A3	TA1CCR0 CCIFG(4)	maskable	0FFFAh	29
Timer1_A3	TA1CCR2 TA1CCR1 CCIFG, TAIFG(2)(4)	maskable	0FFF8h	28
Comparator_A+	CAIFG(4)	maskable	0FFF6h	27
Watchdog Timer+	WDTIFG	maskable	0FFF4h	26
Timer0_A3	TA0CCR0 CCIFG(4)	maskable	0FFF2h	25
Timer0_A3	TA0CCR2 TA0CCR1 CCIFG, TAIFG (5)(4)	maskable	0FFF0h	24
USCI_A0/USCI_B0 receive USCI_B0 I2C status	UCA0RXIFG, UCB0RXIFG(2)(5)	maskable	0FFEEh	23
USCI_A0/USCI_B0 transmit USCI_B0 I2C receive/transmit	UCA0TXIFG, UCB0TXIFG(2)(6)	maskable	0FFECh	22
ADC10 (MSP430G2x53 only)	ADC10IFG(4)	maskable	0FFEAh	21
			0FFE8h	20
I/O Port P2 (up to eight flags)	P2IFG.0 to P2IFG.7(2)(4)	maskable	0FFE6h	19
I/O Port P1 (up to eight flags)	P1IFG.0 to P1IFG.7(2)(4)	maskable	0FFE4h	18
			0FFE2h	17
			0FFE0h	16
See (7)			0FFDEh	15
See (8)			0FFDEh to 0FFC0h	14 to 0, lowest

(1) A reset is generated if the CPU tries to fetch instructions from within the module register memory address range (0h to 01FFh) or from within unused address ranges.
(2) Multiple source flags
(3) (non)-maskable: the individual interrupt-enable bit can disable an interrupt event, but the general interrupt enable cannot.
(4) Interrupt flags are located in the module.
(5) In SPI mode: UCB0RXIFG. In I2C mode: UCALIFG, UCNACKIFG, ICSTTIFG, UCSTPIFG.
(6) In UART or SPI mode: UCB0TXIFG. In I2C mode: UCB0RXIFG, UCB0TXIFG.
(7) This location is used as bootstrap loader security key (BSLSKEY). A 0xAA55 at this location disables the BSL completely. A zero (0h) disables the erasure of the flash if an invalid password is supplied.
(8) The interrupt vectors at addresses 0FFDEh to 0FFC0h are not used in this device and can be used for regular program code if necessary.

Copyright © 2011–2013, Texas Instruments Incorporated

Special Function Registers (SFRs)

Most interrupt and module enable bits are collected into the lowest address space. Special function register bits not allocated to a functional purpose are not physically present in the device. Simple software access is provided with this arrangement.

Legend		
	rw:	Bit can be read and written.
	rw-0,1:	Bit can be read and written. It is reset or set by PUC.
	rw-(0,1):	Bit can be read and written. It is reset or set by POR.
		SFR bit is not present in device.

Table 6. Interrupt Enable Register 1 and 2

Address	7	6	5	4	3	2	1	0
00h			**ACCVIE**	**NMIIE**			**OFIE**	**WDTIE**
			rw-0	rw-0			rw-0	rw-0

WDTIE	Watchdog Timer interrupt enable. Inactive if watchdog mode is selected. Active if Watchdog Timer is configured in interval timer mode.
OFIE	Oscillator fault interrupt enable
NMIIE	(Non)maskable interrupt enable
ACCVIE	Flash access violation interrupt enable

Address	7	6	5	4	3	2	1	0
01h					**UCB0TXIE**	**UCB0RXIE**	**UCA0TXIE**	**UCA0RXIE**
					rw-0	rw-0	rw-0	rw-0

UCA0RXIE	USCI_A0 receive interrupt enable
UCA0TXIE	USCI_A0 transmit interrupt enable
UCB0RXIE	USCI_B0 receive interrupt enable
UCB0TXIE	USCI_B0 transmit interrupt enable

Table 7. Interrupt Flag Register 1 and 2

Address	7	6	5	4	3	2	1	0
02h				**NMIIFG**	**RSTIFG**	**PORIFG**	**OFIFG**	**WDTIFG**
				rw-0	rw-(0)	rw-(1)	rw-1	rw-(0)

WDTIFG	Set on watchdog timer overflow (in watchdog mode) or security key violation. Reset on V_{CC} power-on or a reset condition at the $\overline{RST}$/NMI pin in reset mode.
OFIFG	Flag set on oscillator fault.
PORIFG	Power-On Reset interrupt flag. Set on V_{CC} power-up.
RSTIFG	External reset interrupt flag. Set on a reset condition at $\overline{RST}$/NMI pin in reset mode. Reset on V_{CC} power-up.
NMIIFG	Set via $\overline{RST}$/NMI pin

Address	7	6	5	4	3	2	1	0
03h					**UCB0TXIFG**	**UCB0RXIFG**	**UCA0TXIFG**	**UCA0RXIFG**
					rw-1	rw-0	rw-1	rw-0

UCA0RXIFG	USCI_A0 receive interrupt flag
UCA0TXIFG	USCI_A0 transmit interrupt flag
UCB0RXIFG	USCI_B0 receive interrupt flag
UCB0TXIFG	USCI_B0 transmit interrupt flag

Copyright © 2011–2013, Texas Instruments Incorporated

Memory Organization

Table 8. Memory Organization

		MSP430G2153	MSP430G2253 MSP430G2213	MSP430G2353 MSP430G2313	MSP430G2453 MSP430G2413	MSP430G2553 MSP430G2513
Memory	Size	1kB	2kB	4kB	8kB	16kB
Main: interrupt vector	Flash	0xFFFF to 0xFFC0	0xFFFF to 0xFFC0	0xFFFF to 0xFFC0	0xFFFF to 0xFFC0	0xFFFF to 0xFFC0
Main: code memory	Flash	0xFFFF to 0xFC00	0xFFFF to 0xF800	0xFFFF to 0xF000	0xFFFF to 0xE000	0xFFFF to 0xC000
Information memory	Size	256 Byte	256 Byte	256 Byte	256 Byte	256 Byte
	Flash	010FFh to 01000h	010FFh to 01000h	010FFh to 01000h	010FFh to 01000h	010FFh to 01000h
RAM	Size	256 Byte	256 Byte	256 Byte	512 Byte	512 Byte
		0x02FF to 0x0200	0x02FF to 0x0200	0x02FF to 0x0200	0x03FF to 0x0200	0x03FF to 0x0200
Peripherals	16-bit	01FFh to 0100h	01FFh to 0100h	01FFh to 0100h	01FFh to 0100h	01FFh to 0100h
	8-bit	0FFh to 010h	0FFh to 010h	0FFh to 010h	0FFh to 010h	0FFh to 010h
	8-bit SFR	0Fh to 00h	0Fh to 00h	0Fh to 00h	0Fh to 00h	0Fh to 00h

Bootstrap Loader (BSL)

The MSP430 BSL enables users to program the flash memory or RAM using a UART serial interface. Access to the MSP430 memory via the BSL is protected by user-defined password. For complete description of the features of the BSL and its implementation, see the *MSP430 Programming Via the Bootstrap Loader User's Guide* (SLAU319).

Table 9. BSL Function Pins

BSL FUNCTION	20-PIN PW PACKAGE 20-PIN N PACKAGE	28-PIN PACKAGE PW	32-PIN PACKAGE RHB
Data transmit	3 - P1.1	3 - P1.1	1 - P1.1
Data receive	7 - P1.5	7 - P1.5	5 - P1.5

Flash Memory

The flash memory can be programmed via the Spy-Bi-Wire/JTAG port or in-system by the CPU. The CPU can perform single-byte and single-word writes to the flash memory. Features of the flash memory include:

- Flash memory has n segments of main memory and four segments of information memory (A to D) of 64 bytes each. Each segment in main memory is 512 bytes in size.
- Segments 0 to n may be erased in one step, or each segment may be individually erased.
- Segments A to D can be erased individually or as a group with segments 0 to n. Segments A to D are also called *information memory*.
- Segment A contains calibration data. After reset segment A is protected against programming and erasing. It can be unlocked but care should be taken not to erase this segment if the device-specific calibration data is required.

Copyright © 2011–2013, Texas Instruments Incorporated

Peripherals

Peripherals are connected to the CPU through data, address, and control buses and can be handled using all instructions. For complete module descriptions, see the *MSP430x2xx Family User's Guide* (SLAU144).

Oscillator and System Clock

The clock system is supported by the basic clock module that includes support for a 32768-Hz watch crystal oscillator, an internal very-low-power low-frequency oscillator and an internal digitally controlled oscillator (DCO). The basic clock module is designed to meet the requirements of both low system cost and low power consumption. The internal DCO provides a fast turn-on clock source and stabilizes in less than 1 µs. The basic clock module provides the following clock signals:

- Auxiliary clock (ACLK), sourced either from a 32768-Hz watch crystal or the internal LF oscillator.
- Main clock (MCLK), the system clock used by the CPU.
- Sub-Main clock (SMCLK), the sub-system clock used by the peripheral modules.

The DCO settings to calibrate the DCO output frequency are stored in the information memory segment A.

Main DCO Characteristics

- All ranges selected by RSELx overlap with RSELx + 1: RSELx = 0 overlaps RSELx = 1, ... RSELx = 14 overlaps RSELx = 15.
- DCO control bits DCOx have a step size as defined by parameter S_{DCO}.
- Modulation control bits MODx select how often $f_{DCO(RSEL,DCO+1)}$ is used within the period of 32 DCOCLK cycles. The frequency $f_{DCO(RSEL,DCO)}$ is used for the remaining cycles. The frequency is an average equal to:

$$f_{average} = \frac{32 \times f_{DCO(RSEL,DCO)} \times f_{DCO(RSEL,DCO+1)}}{MOD \times f_{DCO(RSEL,DCO)} + (32 - MOD) \times f_{DCO(RSEL,DCO+1)}}$$

Copyright © 2011–2013, Texas Instruments Incorporated

Calibration Data Stored in Information Memory Segment A

Calibration data is stored for both the DCO and for ADC10 organized in a tag-length-value structure.

Table 10. Tags Used by the ADC Calibration Tags

NAME	ADDRESS	VALUE	DESCRIPTION
TAG_DCO_30	0x10F6	0x01	DCO frequency calibration at V_{CC} = 3 V and T_A = 30°C at calibration
TAG_ADC10_1	0x10DA	0x10	ADC10_1 calibration tag
TAG_EMPTY	-	0xFE	Identifier for empty memory areas

Table 11. Labels Used by the ADC Calibration Tags

LABEL	ADDRESS OFFSET	SIZE	CONDITION AT CALIBRATION AND DESCRIPTION
CAL_ADC_25T85	0x0010	word	INCHx = 0x1010, REF2_5 = 1, T_A = 85°C
CAL_ADC_25T30	0x000E	word	INCHx = 0x1010, REF2_5 = 1, T_A = 30°C
CAL_ADC_25VREF_FACTOR	0x000C	word	REF2_5 = 1, T_A = 30°C, I_{VREF+} = 1 mA
CAL_ADC_15T85	0x000A	word	INCHx = 0x1010, REF2_5 = 0, T_A = 85°C
CAL_ADC_15T30	0x0008	word	INCHx = 0x1010, REF2_5 = 0, T_A = 30°C
CAL_ADC_15VREF_FACTOR	0x0006	word	REF2_5 = 0, T_A = 30°C, I_{VREF+} = 0.5 mA
CAL_ADC_OFFSET	0x0004	word	External VREF = 1.5 V, $f_{ADC10CLK}$ = 5 MHz
CAL_ADC_GAIN_FACTOR	0x0002	word	External VREF = 1.5 V, $f_{ADC10CLK}$ = 5 MHz
CAL_BC1_1MHZ	0x0009	byte	-
CAL_DCO_1MHZ	0x0008	byte	-
CAL_BC1_8MHZ	0x0007	byte	-
CAL_DCO_8MHZ	0x0006	byte	-
CAL_BC1_12MHZ	0x0005	byte	-
CAL_DCO_12MHZ	0x0004	byte	-
CAL_BC1_16MHZ	0x0003	byte	-
CAL_DCO_16MHZ	0x0002	byte	-

Brownout

The brownout circuit is implemented to provide the proper internal reset signal to the device during power on and power off.

Digital I/O

Up to three 8-bit I/O ports are implemented:

- All individual I/O bits are independently programmable.
- Any combination of input, output, and interrupt condition (port P1 and port P2 only) is possible.
- Edge-selectable interrupt input capability for all bits of port P1 and port P2 (if available).
- Read/write access to port-control registers is supported by all instructions.
- Each I/O has an individually programmable pullup or pulldown resistor.
- Each I/O has an individually programmable pin oscillator enable bit to enable low-cost capacitive touch detection.

Watchdog Timer (WDT+)

The primary function of the watchdog timer (WDT+) module is to perform a controlled system restart after a software problem occurs. If the selected time interval expires, a system reset is generated. If the watchdog function is not needed in an application, the module can be disabled or configured as an interval timer and can generate interrupts at selected time intervals.

Copyright © 2011–2013, Texas Instruments Incorporated

Timer_A3 (TA0, TA1)

Timer0/1_A3 is a 16-bit timer/counter with three capture/compare registers. Timer_A3 can support multiple capture/compares, PWM outputs, and interval timing. Timer_A3 also has extensive interrupt capabilities. Interrupts may be generated from the counter on overflow conditions and from each of the capture/compare registers.

Table 12. Timer0_A3 Signal Connections

INPUT PIN NUMBER			DEVICE INPUT SIGNAL	MODULE INPUT NAME	MODULE BLOCK	MODULE OUTPUT SIGNAL	OUTPUT PIN NUMBER		
PW20, N20	PW28	RHB32					PW20, N20	PW28	RHB32
P1.0-2	P1.0-2	P1.0-31	TACLK	TACLK	Timer	NA			
			ACLK	ACLK					
			SMCLK	SMCLK					
PinOsc	PinOsc	PinOsc	TACLK	INCLK					
P1.1-3	P1.1-3	P1.1-1	TA0.0	CCI0A	CCR0	TA0	P1.1-3	P1.1-3	P1.1-1
			ACLK	CCI0B			P1.5-7	P1.5-7	P1.5-5
			V_{SS}	GND				P3.4-15	P3.4-14
			V_{CC}	V_{CC}					
P1.2-4	P1.2-4	P1.2-2	TA0.1	CCI1A	CCR1	TA1	P1.2-4	P1.2-4	P1.2-2
			CAOUT	CCI1B			P1.6-14	P1.6-22	P1.6-21
			V_{SS}	GND			P2.6-19	P2.6-27	P2.6-26
			V_{CC}	V_{CC}				P3.5-19	P3.5-18
	P3.0-9	P3.0-7	TA0.2	CCI2A	CCR2	TA2		P3.0-9	P3.0-7
PinOsc	PinOsc	PinOsc	TA0.2	CCI2B				P3.6-20	P3.6-19
			V_{SS}	GND					
			V_{CC}	V_{CC}					

Table 13. Timer1_A3 Signal Connections

INPUT PIN NUMBER			DEVICE INPUT SIGNAL	MODULE INPUT NAME	MODULE BLOCK	MODULE OUTPUT SIGNAL	OUTPUT PIN NUMBER		
PW20, N20	PW28	RHB32					PW20, N20	PW28	RHB32
-	P3.7-21	P3.7-20	TACLK	TACLK	Timer	NA			
			ACLK	ACLK					
			SMCLK	SMCLK					
-	P3.7-21	P3.7-20	TACLK	INCLK					
P2.0-8	P2.0-10	P2.0-9	TA1.0	CCI0A	CCR0	TA0	P2.0-8	P2.0-10	P2.0-9
P2.3-11	P2.3-16	P2.3-12	TA1.0	CCI0B			P2.3-11	P2.3-16	P2.3-15
			V_{SS}	GND				P3.1-8	P3.1-6
			V_{CC}	V_{CC}					
P2.1-9	P2.1-11	P2.1-10	TA1.1	CCI1A	CCR1	TA1	P2.1-9	P2.1-11	P2.1-10
P2.2-10	P2.2-12	P2.2-11	TA1.1	CCI1B			P2.2-10	P2.2-12	P2.2-11
			V_{SS}	GND				P3.2-13	P3.2-12
			V_{CC}	V_{CC}					
P2.4-12	P2.4-17	P2.4-16	TA1.2	CCI2A	CCR2	TA2	P2.4-12	P2.4-17	P2.4-16
P2.5-13	P2.5-18	P2.5-17	TA1.2	CCI2B			P2.5-13	P2.5-18	P2.5-17
			V_{SS}	GND				P3.3-14	P3.3-13
			V_{CC}	V_{CC}					

Copyright © 2011–2013, Texas Instruments Incorporated

Universal Serial Communications Interface (USCI)

The USCI module is used for serial data communication. The USCI module supports synchronous communication protocols such as SPI (3 or 4 pin) and I2C, and asynchronous communication protocols such as UART, enhanced UART with automatic baudrate detection (LIN), and IrDA. Not all packages support the USCI functionality.

USCI_A0 provides support for SPI (3 or 4 pin), UART, enhanced UART, and IrDA.

USCI_B0 provides support for SPI (3 or 4 pin) and I2C.

Comparator_A+

The primary function of the comparator_A+ module is to support precision slope analog-to-digital conversions, battery-voltage supervision, and monitoring of external analog signals.

ADC10 (MSP430G2x53 Only)

The ADC10 module supports fast 10-bit analog-to-digital conversions. The module implements a 10-bit SAR core, sample select control, reference generator, and data transfer controller (DTC) for automatic conversion result handling, allowing ADC samples to be converted and stored without any CPU intervention.

Copyright © 2011–2013, Texas Instruments Incorporated

Peripheral File Map

Table 14. Peripherals With Word Access

MODULE	REGISTER DESCRIPTION	REGISTER NAME	OFFSET
ADC10 (MSP430G2x53 devices only)	ADC data transfer start address	ADC10SA	1BCh
	ADC memory	ADC10MEM	1B4h
	ADC control register 1	ADC10CTL1	1B2h
	ADC control register 0	ADC10CTL0	1B0h
Timer1_A3	Capture/compare register	TA1CCR2	0196h
	Capture/compare register	TA1CCR1	0194h
	Capture/compare register	TA1CCR0	0192h
	Timer_A register	TA1R	0190h
	Capture/compare control	TA1CCTL2	0186h
	Capture/compare control	TA1CCTL1	0184h
	Capture/compare control	TA1CCTL0	0182h
	Timer_A control	TA1CTL	0180h
	Timer_A interrupt vector	TA1IV	011Eh
Timer0_A3	Capture/compare register	TA0CCR2	0176h
	Capture/compare register	TA0CCR1	0174h
	Capture/compare register	TA0CCR0	0172h
	Timer_A register	TA0R	0170h
	Capture/compare control	TA0CCTL2	0166h
	Capture/compare control	TA0CCTL1	0164h
	Capture/compare control	TA0CCTL0	0162h
	Timer_A control	TA0CTL	0160h
	Timer_A interrupt vector	TA0IV	012Eh
Flash Memory	Flash control 3	FCTL3	012Ch
	Flash control 2	FCTL2	012Ah
	Flash control 1	FCTL1	0128h
Watchdog Timer+	Watchdog/timer control	WDTCTL	0120h

Copyright © 2011–2013, Texas Instruments Incorporated

Table 15. Peripherals With Byte Access

MODULE	REGISTER DESCRIPTION	REGISTER NAME	OFFSET
USCI_B0	USCI_B0 transmit buffer	UCB0TXBUF	06Fh
	USCI_B0 receive buffer	UCB0RXBUF	06Eh
	USCI_B0 status	UCB0STAT	06Dh
	USCI B0 I2C Interrupt enable	UCB0CIE	06Ch
	USCI_B0 bit rate control 1	UCB0BR1	06Bh
	USCI_B0 bit rate control 0	UCB0BR0	06Ah
	USCI_B0 control 1	UCB0CTL1	069h
	USCI_B0 control 0	UCB0CTL0	068h
	USCI_B0 I2C slave address	UCB0SA	011Ah
	USCI_B0 I2C own address	UCB0OA	0118h
USCI_A0	USCI_A0 transmit buffer	UCA0TXBUF	067h
	USCI_A0 receive buffer	UCA0RXBUF	066h
	USCI_A0 status	UCA0STAT	065h
	USCI_A0 modulation control	UCA0MCTL	064h
	USCI_A0 baud rate control 1	UCA0BR1	063h
	USCI_A0 baud rate control 0	UCA0BR0	062h
	USCI_A0 control 1	UCA0CTL1	061h
	USCI_A0 control 0	UCA0CTL0	060h
	USCI_A0 IrDA receive control	UCA0IRRCTL	05Fh
	USCI_A0 IrDA transmit control	UCA0IRTCTL	05Eh
	USCI_A0 auto baud rate control	UCA0ABCTL	05Dh
ADC10 (MSP430G2x53 devices only)	ADC analog enable 0	ADC10AE0	04Ah
	ADC analog enable 1	ADC10AE1	04Bh
	ADC data transfer control register 1	ADC10DTC1	049h
	ADC data transfer control register 0	ADC10DTC0	048h
Comparator_A+	Comparator_A+ port disable	CAPD	05Bh
	Comparator_A+ control 2	CACTL2	05Ah
	Comparator_A+ control 1	CACTL1	059h
Basic Clock System+	Basic clock system control 3	BCSCTL3	053h
	Basic clock system control 2	BCSCTL2	058h
	Basic clock system control 1	BCSCTL1	057h
	DCO clock frequency control	DCOCTL	056h
Port P3 (28-pin PW and 32-pin RHB only)	Port P3 selection 2. pin	P3SEL2	043h
	Port P3 resistor enable	P3REN	010h
	Port P3 selection	P3SEL	01Bh
	Port P3 direction	P3DIR	01Ah
	Port P3 output	P3OUT	019h
	Port P3 input	P3IN	018h
Port P2	Port P2 selection 2	P2SEL2	042h
	Port P2 resistor enable	P2REN	02Fh
	Port P2 selection	P2SEL	02Eh
	Port P2 interrupt enable	P2IE	02Dh
	Port P2 interrupt edge select	P2IES	02Ch
	Port P2 interrupt flag	P2IFG	02Bh
	Port P2 direction	P2DIR	02Ah
	Port P2 output	P2OUT	029h
	Port P2 input	P2IN	028h

Copyright © 2011–2013, Texas Instruments Incorporated

Table 15. Peripherals With Byte Access (continued)

MODULE	REGISTER DESCRIPTION	REGISTER NAME	OFFSET
Port P1	Port P1 selection 2	P1SEL2	041h
	Port P1 resistor enable	P1REN	027h
	Port P1 selection	P1SEL	026h
	Port P1 interrupt enable	P1IE	025h
	Port P1 interrupt edge select	P1IES	024h
	Port P1 interrupt flag	P1IFG	023h
	Port P1 direction	P1DIR	022h
	Port P1 output	P1OUT	021h
	Port P1 input	P1IN	020h
Special Function	SFR interrupt flag 2	IFG2	003h
	SFR interrupt flag 1	IFG1	002h
	SFR interrupt enable 2	IE2	001h
	SFR interrupt enable 1	IE1	000h

Copyright © 2011–2013, Texas Instruments Incorporated

Absolute Maximum Ratings[1]

Voltage applied at V_{CC} to V_{SS}		–0.3 V to 4.1 V
Voltage applied to any pin[2]		–0.3 V to V_{CC} + 0.3 V
Diode current at any device pin		±2 mA
Storage temperature range, T_{stg} [3]	Unprogrammed device	–55°C to 150°C
	Programmed device	–55°C to 150°C

(1) Stresses beyond those listed under "absolute maximum ratings" may cause permanent damage to the device. These are stress ratings only, and functional operation of the device at these or any other conditions beyond those indicated under "recommended operating conditions" is not implied. Exposure to absolute-maximum-rated conditions for extended periods may affect device reliability.
(2) All voltages referenced to V_{SS}. The JTAG fuse-blow voltage, V_{FB}, is allowed to exceed the absolute maximum rating. The voltage is applied to the TEST pin when blowing the JTAG fuse.
(3) Higher temperature may be applied during board soldering according to the current JEDEC J-STD-020 specification with peak reflow temperatures not higher than classified on the device label on the shipping boxes or reels.

Recommended Operating Conditions

Typical values are specified at V_{CC} = 3.3 V and T_A = 25°C (unless otherwise noted)

			MIN	NOM	MAX	UNIT
V_{CC}	Supply voltage	During program execution	1.8		3.6	V
		During flash programming or erase	2.2		3.6	
V_{SS}	Supply voltage			0		V
T_A	Operating free-air temperature	I version	–40		85	°C
f_{SYSTEM}	Processor frequency (maximum MCLK frequency)[1][2]	V_{CC} = 1.8 V, Duty cycle = 50% ± 10%	dc		6	MHz
		V_{CC} = 2.7 V, Duty cycle = 50% ± 10%	dc		12	
		V_{CC} = 3.3 V, Duty cycle = 50% ± 10%	dc		16	

(1) The MSP430 CPU is clocked directly with MCLK. Both the high and low phase of MCLK must not exceed the pulse duration of the specified maximum frequency.
(2) Modules might have a different maximum input clock specification. See the specification of the respective module in this data sheet.

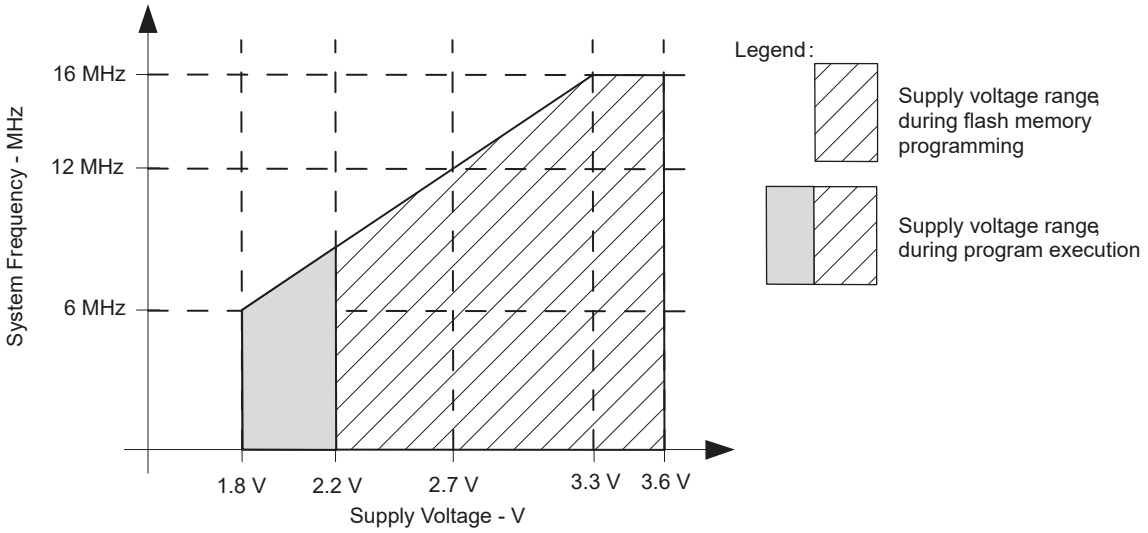

Note: Minimum processor frequency is defined by system clock. Flash program or erase operations require a minimum V_{CC} of 2.2 V.

Figure 1. Safe Operating Area

Electrical Characteristics

Active Mode Supply Current Into V_{CC} Excluding External Current

over recommended ranges of supply voltage and operating free-air temperature (unless otherwise noted)[(1)(2)]

PARAMETER		TEST CONDITIONS	T_A	V_{CC}	MIN	TYP	MAX	UNIT
$I_{AM,1MHz}$	Active mode (AM) current at 1 MHz	$f_{DCO} = f_{MCLK} = f_{SMCLK} = 1$ MHz, $f_{ACLK} = 0$ Hz, Program executes in flash, BCSCTL1 = CALBC1_1MHZ, DCOCTL = CALDCO_1MHZ, CPUOFF = 0, SCG0 = 0, SCG1 = 0, OSCOFF = 0		2.2 V		230		µA
				3 V		330	420	

(1) All inputs are tied to 0 V or to V_{CC}. Outputs do not source or sink any current.
(2) The currents are characterized with a Micro Crystal CC4V-T1A SMD crystal with a load capacitance of 9 pF. The internal and external load capacitance is chosen to closely match the required 9 pF.

Typical Characteristics, Active Mode Supply Current (Into V_{CC})

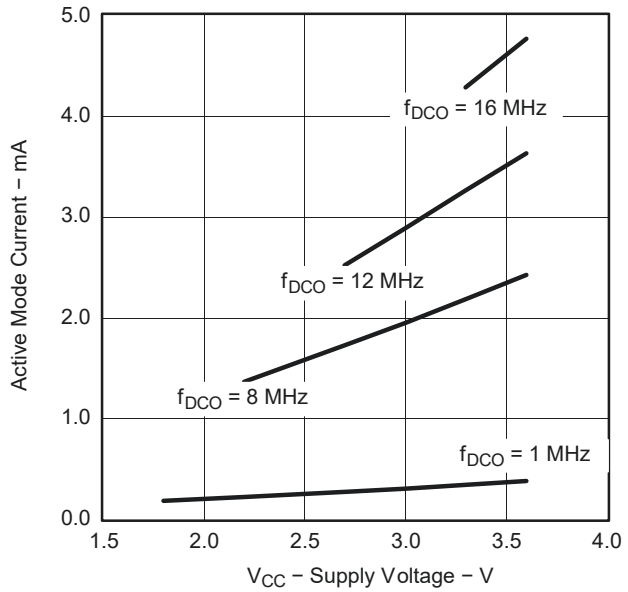

Figure 2. Active Mode Current vs V_{CC}, T_A = 25°C

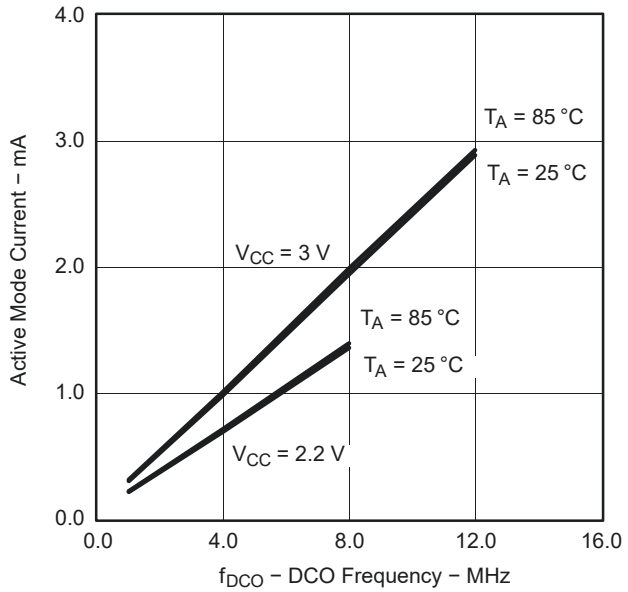

Figure 3. Active Mode Current vs DCO Frequency

Copyright © 2011–2013, Texas Instruments Incorporated

Low-Power Mode Supply Currents (Into V_{CC}) Excluding External Current

over recommended ranges of supply voltage and operating free-air temperature (unless otherwise noted)(1) (2)

PARAMETER		TEST CONDITIONS	T_A	V_{CC}	MIN	TYP	MAX	UNIT
$I_{LPM0,1MHz}$	Low-power mode 0 (LPM0) current(3)	f_{MCLK} = 0 MHz, f_{SMCLK} = f_{DCO} = 1 MHz, f_{ACLK} = 32768 Hz, BCSCTL1 = CALBC1_1MHZ, DCOCTL = CALDCO_1MHZ, CPUOFF = 1, SCG0 = 0, SCG1 = 0, OSCOFF = 0	25°C	2.2 V		56		µA
I_{LPM2}	Low-power mode 2 (LPM2) current(4)	f_{MCLK} = f_{SMCLK} = 0 MHz, f_{DCO} = 1 MHz, f_{ACLK} = 32768 Hz, BCSCTL1 = CALBC1_1MHZ, DCOCTL = CALDCO_1MHZ, CPUOFF = 1, SCG0 = 0, SCG1 = 1, OSCOFF = 0	25°C	2.2 V		22		µA
$I_{LPM3,LFXT1}$	Low-power mode 3 (LPM3) current(4)	f_{DCO} = f_{MCLK} = f_{SMCLK} = 0 MHz, f_{ACLK} = 32768 Hz, CPUOFF = 1, SCG0 = 1, SCG1 = 1, OSCOFF = 0	25°C	2.2 V		0.7	1.5	µA
$I_{LPM3,VLO}$	Low-power mode 3 current, (LPM3)(4)	f_{DCO} = f_{MCLK} = f_{SMCLK} = 0 MHz, f_{ACLK} from internal LF oscillator (VLO), CPUOFF = 1, SCG0 = 1, SCG1 = 1, OSCOFF = 0	25°C	2.2 V		0.5	0.7	µA
I_{LPM4}	Low-power mode 4 (LPM4) current(5)	f_{DCO} = f_{MCLK} = f_{SMCLK} = 0 MHz, f_{ACLK} = 0 Hz, CPUOFF = 1, SCG0 = 1, SCG1 = 1, OSCOFF = 1	25°C	2.2 V		0.1	0.5	µA
			85°C			0.8	1.7	

(1) All inputs are tied to 0 V or to V_{CC}. Outputs do not source or sink any current.
(2) The currents are characterized with a Micro Crystal CC4V-T1A SMD crystal with a load capacitance of 9 pF. The internal and external load capacitance is chosen to closely match the required 9 pF.
(3) Current for brownout and WDT clocked by SMCLK included.
(4) Current for brownout and WDT clocked by ACLK included.
(5) Current for brownout included.

Typical Characteristics, Low-Power Mode Supply Currents

over recommended ranges of supply voltage and operating free-air temperature (unless otherwise noted)

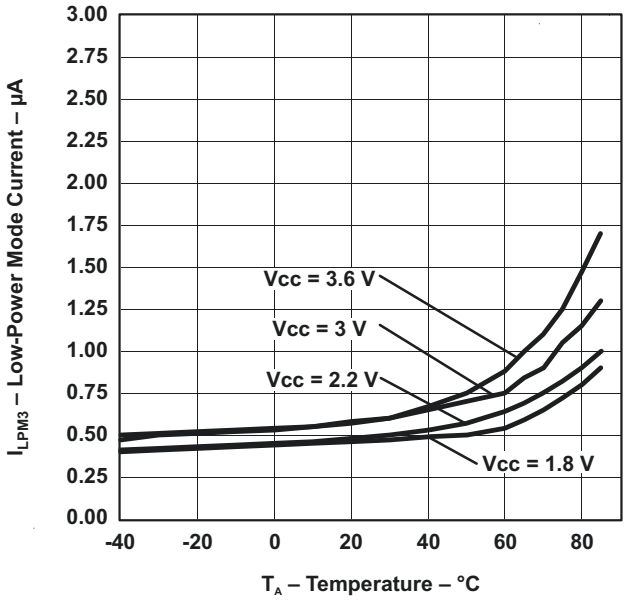

Figure 4. LPM3 Current vs Temperature

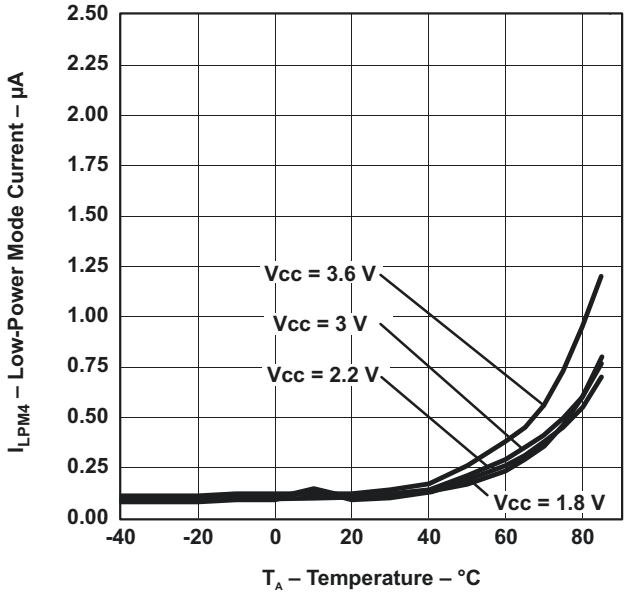

Figure 5. LPM4 Current vs Temperature

Copyright © 2011–2013, Texas Instruments Incorporated

Schmitt-Trigger Inputs, Ports Px

over recommended ranges of supply voltage and operating free-air temperature (unless otherwise noted)

PARAMETER		TEST CONDITIONS	V_{CC}	MIN	TYP	MAX	UNIT
V_{IT+}	Positive-going input threshold voltage			0.45 V_{CC}		0.75 V_{CC}	V
			3 V	1.35		2.25	
V_{IT-}	Negative-going input threshold voltage			0.25 V_{CC}		0.55 V_{CC}	V
			3 V	0.75		1.65	
V_{hys}	Input voltage hysteresis ($V_{IT+} – V_{IT-}$)		3 V	0.3		1	V
R_{Pull}	Pullup/pulldown resistor	For pullup: $V_{IN} = V_{SS}$ For pulldown: $V_{IN} = V_{CC}$	3 V	20	35	50	kΩ
C_I	Input capacitance	$V_{IN} = V_{SS}$ or V_{CC}			5		pF

Leakage Current, Ports Px

over recommended ranges of supply voltage and operating free-air temperature (unless otherwise noted)

PARAMETER		TEST CONDITIONS	V_{CC}	MIN	MAX	UNIT
$I_{lkg(Px.y)}$	High-impedance leakage current	(1) (2)	3 V		±50	nA

(1) The leakage current is measured with V_{SS} or V_{CC} applied to the corresponding pin(s), unless otherwise noted.
(2) The leakage of the digital port pins is measured individually. The port pin is selected for input and the pullup/pulldown resistor is disabled.

Outputs, Ports Px

over recommended ranges of supply voltage and operating free-air temperature (unless otherwise noted)

PARAMETER		TEST CONDITIONS	V_{CC}	MIN	TYP	MAX	UNIT
V_{OH}	High-level output voltage	$I_{(OHmax)} = –6$ mA(1)	3 V		$V_{CC} – 0.3$		V
V_{OL}	Low-level output voltage	$I_{(OLmax)} = 6$ mA(1)	3 V		$V_{SS} + 0.3$		V

(1) The maximum total current, $I_{(OHmax)}$ and $I_{(OLmax)}$, for all outputs combined should not exceed ±48 mA to hold the maximum voltage drop specified.

Output Frequency, Ports Px

over recommended ranges of supply voltage and operating free-air temperature (unless otherwise noted)

PARAMETER		TEST CONDITIONS	V_{CC}	MIN	TYP	MAX	UNIT
$f_{Px.y}$	Port output frequency (with load)	Px.y, $C_L = 20$ pF, $R_L = 1$ kΩ(1) (2)	3 V		12		MHz
f_{Port_CLK}	Clock output frequency	Px.y, $C_L = 20$ pF(2)	3 V		16		MHz

(1) A resistive divider with two 0.5-kΩ resistors between V_{CC} and V_{SS} is used as load. The output is connected to the center tap of the divider.
(2) The output voltage reaches at least 10% and 90% V_{CC} at the specified toggle frequency.

Copyright © 2011–2013, Texas Instruments Incorporated

Typical Characteristics, Outputs

over recommended ranges of supply voltage and operating free-air temperature (unless otherwise noted)

TYPICAL LOW-LEVEL OUTPUT CURRENT vs LOW-LEVEL OUTPUT VOLTAGE

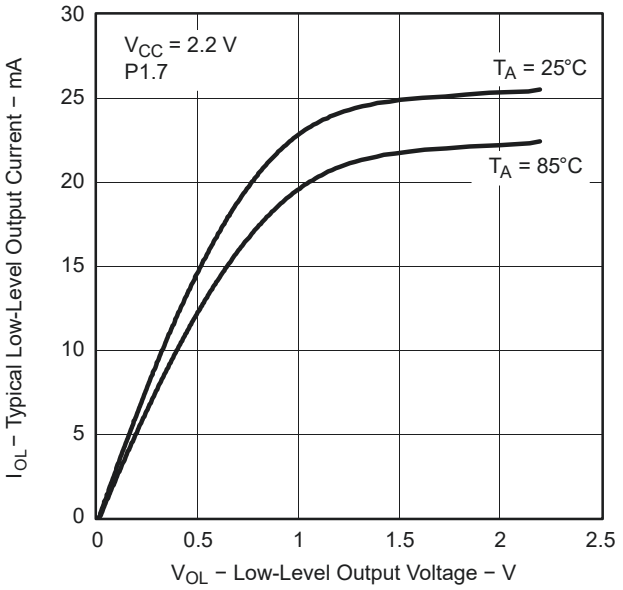

Figure 6.

TYPICAL LOW-LEVEL OUTPUT CURRENT vs LOW-LEVEL OUTPUT VOLTAGE

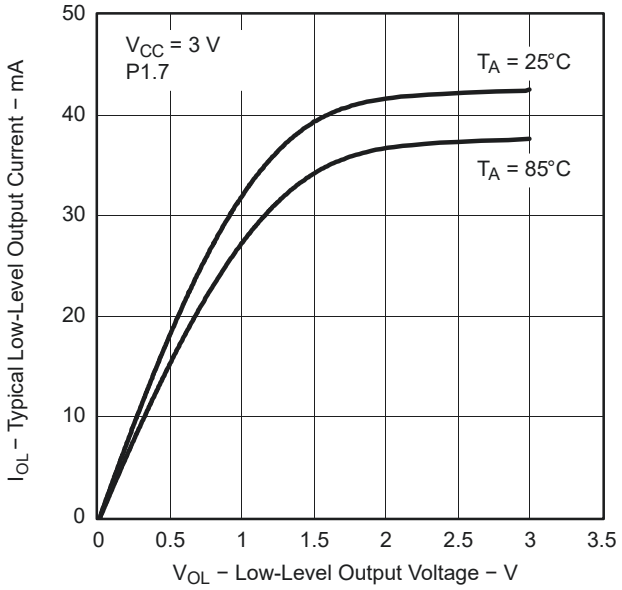

Figure 7.

TYPICAL HIGH-LEVEL OUTPUT CURRENT vs HIGH-LEVEL OUTPUT VOLTAGE

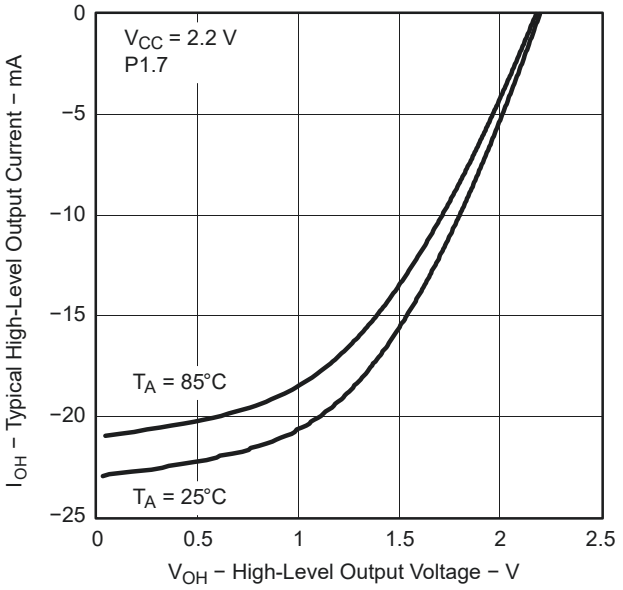

Figure 8.

TYPICAL HIGH-LEVEL OUTPUT CURRENT vs HIGH-LEVEL OUTPUT VOLTAGE

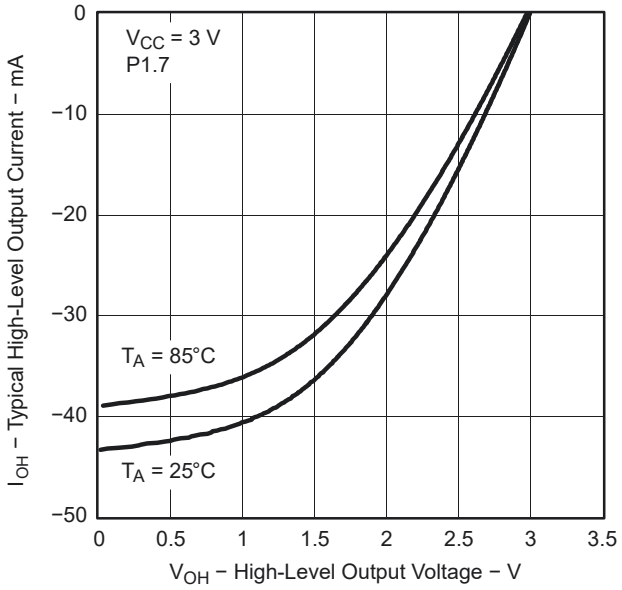

Figure 9.

Pin-Oscillator Frequency – Ports Px

over recommended ranges of supply voltage and operating free-air temperature (unless otherwise noted)

PARAMETER		TEST CONDITIONS	V_{CC}	MIN	TYP	MAX	UNIT
$fo_{P1.x}$	Port output oscillation frequency	P1.y, C_L = 10 pF, R_L = 100 kΩ(1)(2)	3 V		1400		kHz
		P1.y, C_L = 20 pF, R_L = 100 kΩ(1)(2)			900		
$fo_{P2.x}$	Port output oscillation frequency	P2.0 to P2.5, C_L = 10 pF, R_L = 100 kΩ(1)(2)			1800		kHz
		P2.0 to P2.5, C_L = 20 pF, R_L = 100 kΩ(1)(2)	3 V		1000		
$fo_{P2.6/7}$	Port output oscillation frequency	P2.6 and P2.7, C_L = 20 pF, R_L = 100 kΩ(1)(2)	3 V		700		kHz
$fo_{P3.x}$	Port output oscillation frequency	P3.y, C_L = 10 pF, R_L = 100 kΩ(1)(2)			1800		kHz
		P3.y, C_L = 20 pF, R_L = 100 kΩ(1)(2)			1000		

(1) A resistive divider with two 50-kΩ resistors between V_{CC} and V_{SS} is used as load. The output is connected to the center tap of the divider.
(2) The output voltage reaches at least 10% and 90% V_{CC} at the specified toggle frequency.

Typical Characteristics, Pin-Oscillator Frequency

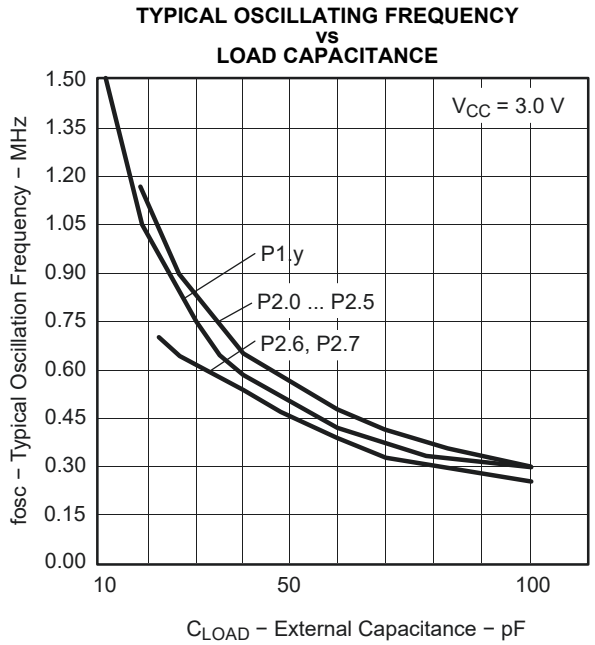

A. One output active at a time.

Figure 10.

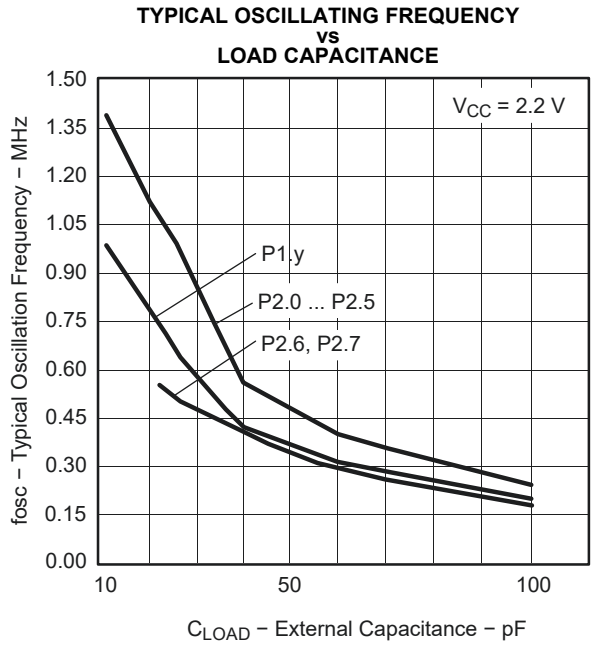

A. One output active at a time.

Figure 11.

Copyright © 2011–2013, Texas Instruments Incorporated

POR, BOR(1)(2)

over recommended ranges of supply voltage and operating free-air temperature (unless otherwise noted)

PARAMETER		TEST CONDITIONS	V_{CC}	MIN	TYP	MAX	UNIT
$V_{CC(start)}$	See Figure 12	$dV_{CC}/dt \le 3$ V/s			0.7 × $V_{(B\_IT-)}$		V
$V_{(B\_IT-)}$	See Figure 12 through Figure 14	$dV_{CC}/dt \le 3$ V/s			1.35		V
$V_{hys(B\_IT-)}$	See Figure 12	$dV_{CC}/dt \le 3$ V/s			140		mV
$t_{d(BOR)}$	See Figure 12				2000		µs
$t_{(reset)}$	Pulse duration needed at $\overline{RST}$/NMI pin to accepted reset internally		2.2 V	2			µs

(1) The current consumption of the brownout module is already included in the I_{CC} current consumption data. The voltage level $V_{(B\_IT-)}$ + $V_{hys(B_IT-)}$is ≤ 1.8 V.
(2) During power up, the CPU begins code execution following a period of $t_{d(BOR)}$ after $V_{CC} = V_{(B\_IT-)} + V_{hys(B\_IT-)}$. The default DCO settings must not be changed until $V_{CC} \ge V_{CC(min)}$, where $V_{CC(min)}$ is the minimum supply voltage for the desired operating frequency.

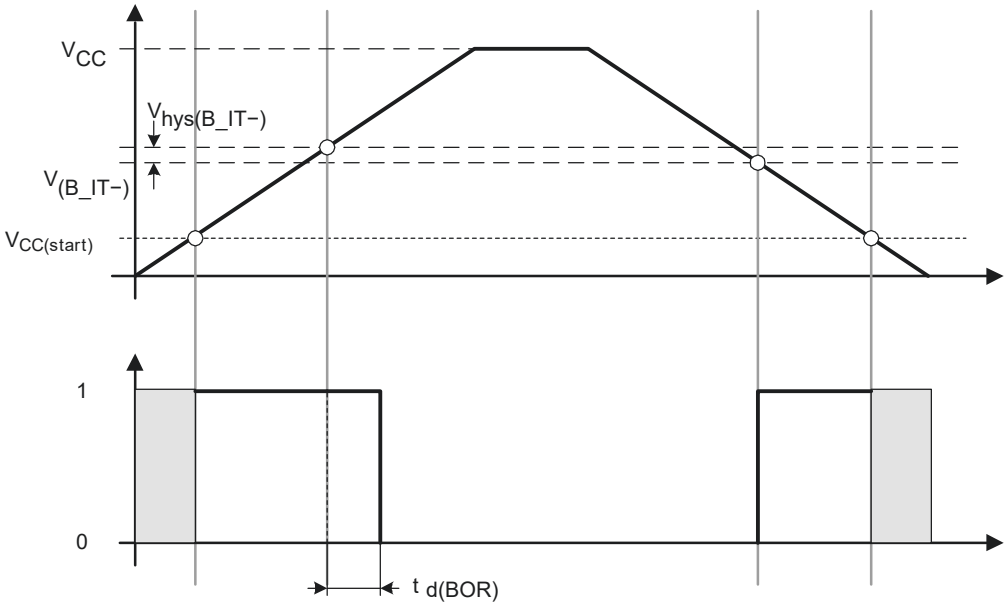

Figure 12. POR and BOR vs Supply Voltage

Typical Characteristics, POR and BOR

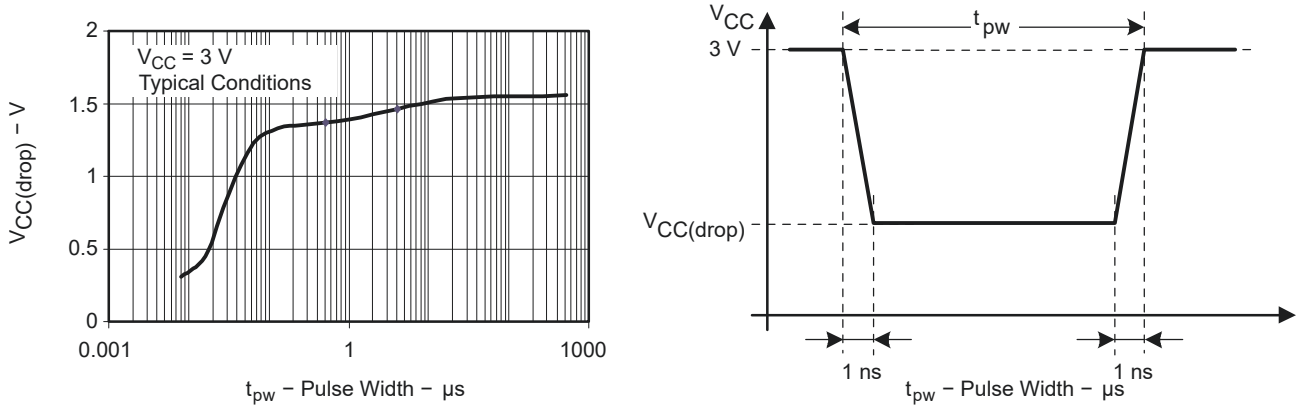

Figure 13. $V_{CC(drop)}$ Level With a Square Voltage Drop to Generate a POR or BOR Signal

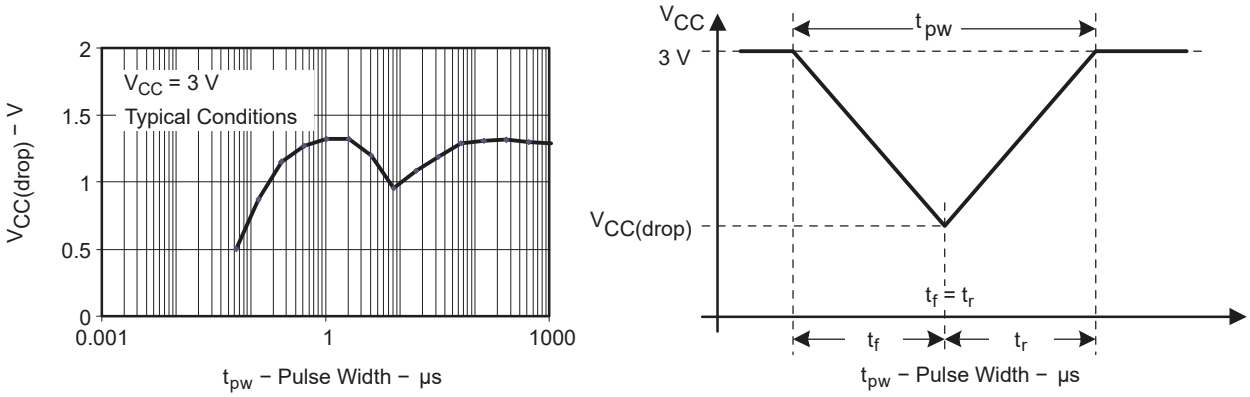

Figure 14. $V_{CC(drop)}$ Level With a Triangle Voltage Drop to Generate a POR or BOR Signal

Copyright © 2011–2013, Texas Instruments Incorporated

DCO Frequency

over recommended ranges of supply voltage and operating free-air temperature (unless otherwise noted)

PARAMETER		TEST CONDITIONS	V_{CC}	MIN	TYP	MAX	UNIT
V_{CC}	Supply voltage	RSELx < 14		1.8		3.6	V
		RSELx = 14		2.2		3.6	
		RSELx = 15		3		3.6	
$f_{DCO(0,0)}$	DCO frequency (0, 0)	RSELx = 0, DCOx = 0, MODx = 0	3 V	0.06		0.14	MHz
$f_{DCO(0,3)}$	DCO frequency (0, 3)	RSELx = 0, DCOx = 3, MODx = 0	3 V	0.07		0.17	MHz
$f_{DCO(1,3)}$	DCO frequency (1, 3)	RSELx = 1, DCOx = 3, MODx = 0	3 V		0.15		MHz
$f_{DCO(2,3)}$	DCO frequency (2, 3)	RSELx = 2, DCOx = 3, MODx = 0	3 V		0.21		MHz
$f_{DCO(3,3)}$	DCO frequency (3, 3)	RSELx = 3, DCOx = 3, MODx = 0	3 V		0.30		MHz
$f_{DCO(4,3)}$	DCO frequency (4, 3)	RSELx = 4, DCOx = 3, MODx = 0	3 V		0.41		MHz
$f_{DCO(5,3)}$	DCO frequency (5, 3)	RSELx = 5, DCOx = 3, MODx = 0	3 V		0.58		MHz
$f_{DCO(6,3)}$	DCO frequency (6, 3)	RSELx = 6, DCOx = 3, MODx = 0	3 V	0.54		1.06	MHz
$f_{DCO(7,3)}$	DCO frequency (7, 3)	RSELx = 7, DCOx = 3, MODx = 0	3 V	0.80		1.50	MHz
$f_{DCO(8,3)}$	DCO frequency (8, 3)	RSELx = 8, DCOx = 3, MODx = 0	3 V		1.6		MHz
$f_{DCO(9,3)}$	DCO frequency (9, 3)	RSELx = 9, DCOx = 3, MODx = 0	3 V		2.3		MHz
$f_{DCO(10,3)}$	DCO frequency (10, 3)	RSELx = 10, DCOx = 3, MODx = 0	3 V		3.4		MHz
$f_{DCO(11,3)}$	DCO frequency (11, 3)	RSELx = 11, DCOx = 3, MODx = 0	3 V		4.25		MHz
$f_{DCO(12,3)}$	DCO frequency (12, 3)	RSELx = 12, DCOx = 3, MODx = 0	3 V	4.30		7.30	MHz
$f_{DCO(13,3)}$	DCO frequency (13, 3)	RSELx = 13, DCOx = 3, MODx = 0	3 V	6.00	7.8	9.60	MHz
$f_{DCO(14,3)}$	DCO frequency (14, 3)	RSELx = 14, DCOx = 3, MODx = 0	3 V	8.60		13.9	MHz
$f_{DCO(15,3)}$	DCO frequency (15, 3)	RSELx = 15, DCOx = 3, MODx = 0	3 V	12.0		18.5	MHz
$f_{DCO(15,7)}$	DCO frequency (15, 7)	RSELx = 15, DCOx = 7, MODx = 0	3 V	16.0		26.0	MHz
S_{RSEL}	Frequency step between range RSEL and RSEL+1	$S_{RSEL} = f_{DCO(RSEL+1,DCO)}/f_{DCO(RSEL,DCO)}$	3 V		1.35		ratio
S_{DCO}	Frequency step between tap DCO and DCO+1	$S_{DCO} = f_{DCO(RSEL,DCO+1)}/f_{DCO(RSEL,DCO)}$	3 V		1.08		ratio
	Duty cycle	Measured at SMCLK output	3 V		50		%

Copyright © 2011–2013, Texas Instruments Incorporated

Calibrated DCO Frequencies, Tolerance

over recommended ranges of supply voltage and operating free-air temperature (unless otherwise noted)

PARAMETER	TEST CONDITIONS	T_A	V_{CC}	MIN	TYP	MAX	UNIT
1-MHz tolerance over temperature(1)	BCSCTL1 = CALBC1_1MHZ, DCOCTL = CALDCO_1MHZ, calibrated at 30°C and 3 V	0°C to 85°C	3 V	-3	±0.5	+3	%
1-MHz tolerance over V_{CC}	BCSCTL1 = CALBC1_1MHZ, DCOCTL = CALDCO_1MHZ, calibrated at 30°C and 3 V	30°C	1.8 V to 3.6 V	-3	±2	+3	%
1-MHz tolerance overall	BCSCTL1 = CALBC1_1MHZ, DCOCTL = CALDCO_1MHZ, calibrated at 30°C and 3 V	-40°C to 85°C	1.8 V to 3.6 V	-6	±3	+6	%
8-MHz tolerance over temperature(1)	BCSCTL1 = CALBC1_8MHZ, DCOCTL = CALDCO_8MHZ, calibrated at 30°C and 3 V	0°C to 85°C	3 V	-3	±0.5	+3	%
8-MHz tolerance over V_{CC}	BCSCTL1 = CALBC1_8MHZ, DCOCTL = CALDCO_8MHZ, calibrated at 30°C and 3 V	30°C	2.2 V to 3.6 V	-3	±2	+3	%
8-MHz tolerance overall	BCSCTL1 = CALBC1_8MHZ, DCOCTL = CALDCO_8MHZ, calibrated at 30°C and 3 V	-40°C to 85°C	2.2 V to 3.6 V	-6	±3	+6	%
12-MHz tolerance over temperature(1)	BCSCTL1 = CALBC1_12MHZ, DCOCTL = CALDCO_12MHZ, calibrated at 30°C and 3 V	0°C to 85°C	3 V	-3	±0.5	+3	%
12-MHz tolerance over V_{CC}	BCSCTL1 = CALBC1_12MHZ, DCOCTL = CALDCO_12MHZ, calibrated at 30°C and 3 V	30°C	2.7 V to 3.6 V	-3	±2	+3	%
12-MHz tolerance overall	BCSCTL1 = CALBC1_12MHZ, DCOCTL = CALDCO_12MHZ, calibrated at 30°C and 3 V	-40°C to 85°C	2.7 V to 3.6 V	-6	±3	+6	%
16-MHz tolerance over temperature(1)	BCSCTL1 = CALBC1_16MHZ, DCOCTL = CALDCO_16MHZ, calibrated at 30°C and 3 V	0°C to 85°C	3 V	-3	±0.5	+3	%
16-MHz tolerance over V_{CC}	BCSCTL1 = CALBC1_16MHZ, DCOCTL = CALDCO_16MHZ, calibrated at 30°C and 3 V	30°C	3.3 V to 3.6 V	-3	±2	+3	%
16-MHz tolerance overall	BCSCTL1 = CALBC1_16MHZ, DCOCTL = CALDCO_16MHZ, calibrated at 30°C and 3 V	-40°C to 85°C	3.3 V to 3.6 V	-6	±3	+6	%

(1) This is the frequency change from the measured frequency at 30°C over temperature.

Copyright © 2011–2013, Texas Instruments Incorporated

Wake-Up From Lower-Power Modes (LPM3/4)

over recommended ranges of supply voltage and operating free-air temperature (unless otherwise noted)

PARAMETER		TEST CONDITIONS	V_{CC}	MIN	TYP	MAX	UNIT
$t_{DCO,LPM3/4}$	DCO clock wake-up time from LPM3/4 (1)	BCSCTL1 = CALBC1_1MHz, DCOCTL = CALDCO_1MHz	3 V		1.5		µs
$t_{CPU,LPM3/4}$	CPU wake-up time from LPM3/4 (2)				$1/f_{MCLK}$ + $t_{Clock,LPM3/4}$		

(1) The DCO clock wake-up time is measured from the edge of an external wake-up signal (e.g., port interrupt) to the first clock edge observable externally on a clock pin (MCLK or SMCLK).
(2) Parameter applicable only if DCOCLK is used for MCLK.

Typical Characteristics, DCO Clock Wake-Up Time From LPM3/4

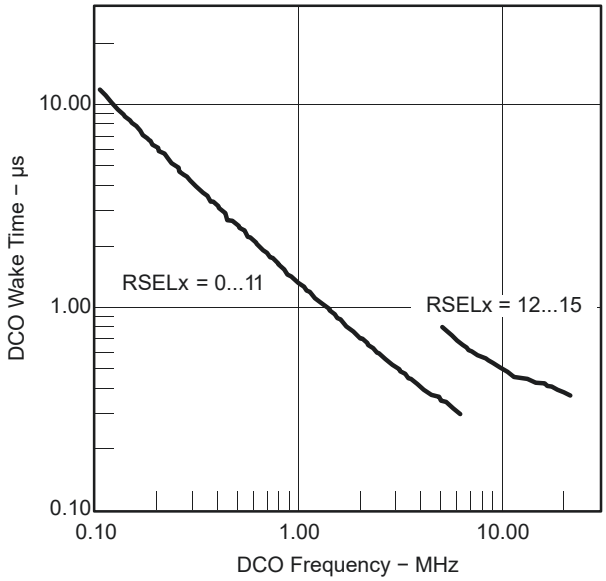

Figure 15. DCO Wake-Up Time From LPM3 vs DCO Frequency

Crystal Oscillator, XT1, Low-Frequency Mode(1)

over recommended ranges of supply voltage and operating free-air temperature (unless otherwise noted)

PARAMETER		TEST CONDITIONS	V_{CC}	MIN	TYP	MAX	UNIT
$f_{LFXT1,LF}$	LFXT1 oscillator crystal frequency, LF mode 0, 1	XTS = 0, LFXT1Sx = 0 or 1	1.8 V to 3.6 V		32768		Hz
$f_{LFXT1,LF,logic}$	LFXT1 oscillator logic level square wave input frequency, LF mode	XTS = 0, XCAPx = 0, LFXT1Sx = 3	1.8 V to 3.6 V	10000	32768	50000	Hz
OA_{LF}	Oscillation allowance for LF crystals	XTS = 0, LFXT1Sx = 0, $f_{LFXT1,LF}$ = 32768 Hz, $C_{L,eff}$ = 6 pF			500		kΩ
		XTS = 0, LFXT1Sx = 0, $f_{LFXT1,LF}$ = 32768 Hz, $C_{L,eff}$ = 12 pF			200		
$C_{L,eff}$	Integrated effective load capacitance, LF mode(2)	XTS = 0, XCAPx = 0			1		pF
		XTS = 0, XCAPx = 1			5.5		
		XTS = 0, XCAPx = 2			8.5		
		XTS = 0, XCAPx = 3			11		
	Duty cycle, LF mode	XTS = 0, Measured at P2.0/ACLK, $f_{LFXT1,LF}$ = 32768 Hz	2.2 V	30	50	70	%
$f_{Fault,LF}$	Oscillator fault frequency, LF mode(3)	XTS = 0, XCAPx = 0, LFXT1Sx = 3(4)	2.2 V	10		10000	Hz

(1) To improve EMI on the XT1 oscillator, the following guidelines should be observed.
(a) Keep the trace between the device and the crystal as short as possible.
(b) Design a good ground plane around the oscillator pins.
(c) Prevent crosstalk from other clock or data lines into oscillator pins XIN and XOUT.
(d) Avoid running PCB traces underneath or adjacent to the XIN and XOUT pins.
(e) Use assembly materials and process that avoid any parasitic load on the oscillator XIN and XOUT pins.
(f) If a conformal coating is used, ensure that it does not induce capacitive or resistive leakage between the oscillator pins.
(g) Do not route the XOUT line to the JTAG header to support the serial programming adapter as shown in other documentation. This signal is no longer required for the serial programming adapter.
(2) Includes parasitic bond and package capacitance (approximately 2 pF per pin).
Because the PCB adds additional capacitance, it is recommended to verify the correct load by measuring the ACLK frequency. For a correct setup, the effective load capacitance should always match the specification of the used crystal.
(3) Frequencies below the MIN specification set the fault flag. Frequencies above the MAX specification do not set the fault flag. Frequencies in between might set the flag.
(4) Measured with logic-level input frequency but also applies to operation with crystals.

Internal Very-Low-Power Low-Frequency Oscillator (VLO)

over recommended ranges of supply voltage and operating free-air temperature (unless otherwise noted)

PARAMETER		T_A	V_{CC}	MIN	TYP	MAX	UNIT
f_{VLO}	VLO frequency	-40°C to 85°C	3 V	4	12	20	kHz
df_{VLO}/d_T	VLO frequency temperature drift	-40°C to 85°C	3 V		0.5		%/°C
df_{VLO}/dV_{CC}	VLO frequency supply voltage drift	25°C	1.8 V to 3.6 V		4		%/V

Timer_A

over recommended ranges of supply voltage and operating free-air temperature (unless otherwise noted)

PARAMETER		TEST CONDITIONS	V_{CC}	MIN	TYP	MAX	UNIT
f_{TA}	Timer_A input clock frequency	SMCLK, duty cycle = 50% ± 10%			f_{SYSTEM}		MHz
$t_{TA,cap}$	Timer_A capture timing	TA0, TA1	3 V	20			ns

Copyright © 2011–2013, Texas Instruments Incorporated

USCI (UART Mode)

over recommended ranges of supply voltage and operating free-air temperature (unless otherwise noted)

PARAMETER		TEST CONDITIONS	V_{CC}	MIN	TYP	MAX	UNIT
f_{USCI}	USCI input clock frequency	SMCLK, duty cycle = 50% ± 10%			f_{SYSTEM}		MHz
$f_{max,BITCLK}$	Maximum BITCLK clock frequency (equals baudrate in MBaud)(1)		3 V	2			MHz
t_{τ}	UART receive deglitch time(2)		3 V	50	100	600	ns

(1) The DCO wake-up time must be considered in LPM3 and LPM4 for baud rates above 1 MHz.
(2) Pulses on the UART receive input (UCxRX) shorter than the UART receive deglitch time are suppressed. To ensure that pulses are correctly recognized, their duration should exceed the maximum specification of the deglitch time.

USCI (SPI Master Mode)

over recommended ranges of supply voltage and operating free-air temperature (unless otherwise noted) (see Figure 16 and Figure 17)

PARAMETER		TEST CONDITIONS	V_{CC}	MIN	TYP	MAX	UNIT
f_{USCI}	USCI input clock frequency	SMCLK, duty cycle = 50% ± 10%				f_{SYSTEM}	MHz
$t_{SU,MI}$	SOMI input data setup time		3 V	75			ns
$t_{HD,MI}$	SOMI input data hold time		3 V	0			ns
$t_{VALID,MO}$	SIMO output data valid time	UCLK edge to SIMO valid, C_L = 20 pF	3 V			20	ns

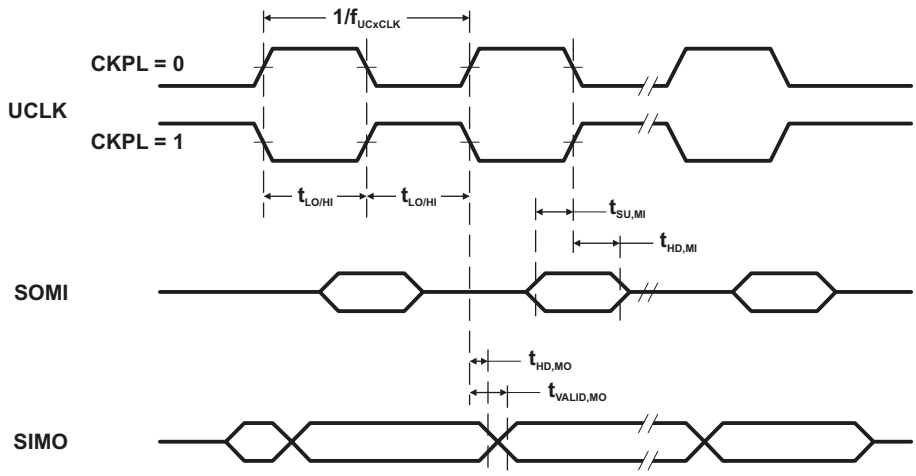

Figure 16. SPI Master Mode, CKPH = 0

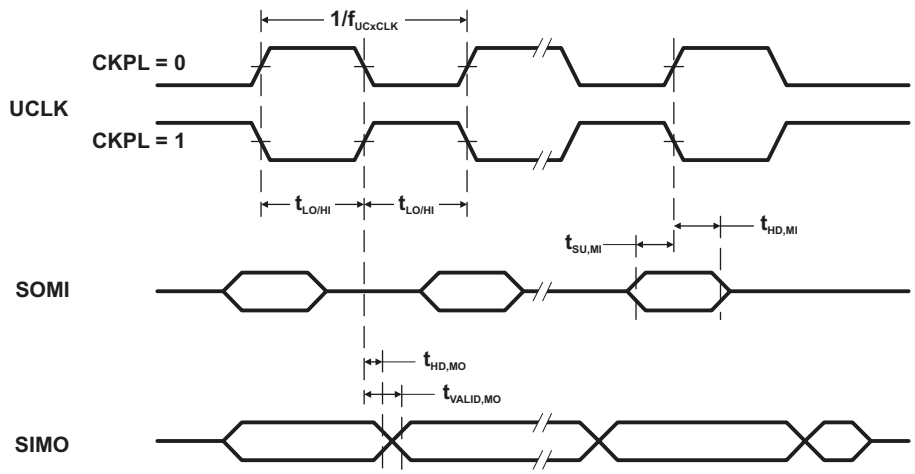

Figure 17. SPI Master Mode, CKPH = 1

USCI (SPI Slave Mode)

over recommended ranges of supply voltage and operating free-air temperature (unless otherwise noted) (see Figure 18 and Figure 19)

PARAMETER		TEST CONDITIONS	V_{CC}	MIN	TYP	MAX	UNIT
$t_{STE,LEAD}$	STE lead time, STE low to clock		3 V		50		ns
$t_{STE,LAG}$	STE lag time, Last clock to STE high		3 V	10			ns
$t_{STE,ACC}$	STE access time, STE low to SOMI data out		3 V		50		ns
$t_{STE,DIS}$	STE disable time, STE high to SOMI high impedance		3 V		50		ns
$t_{SU,SI}$	SIMO input data setup time		3 V	15			ns
$t_{HD,SI}$	SIMO input data hold time		3 V	10			ns
$t_{VALID,SO}$	SOMI output data valid time	UCLK edge to SOMI valid, C_L = 20 pF	3 V		50	75	ns

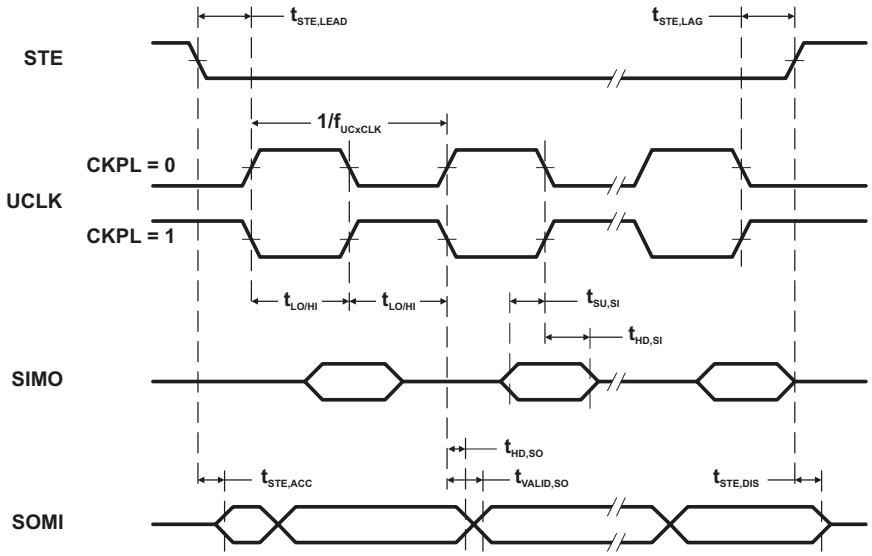

Figure 18. SPI Slave Mode, CKPH = 0

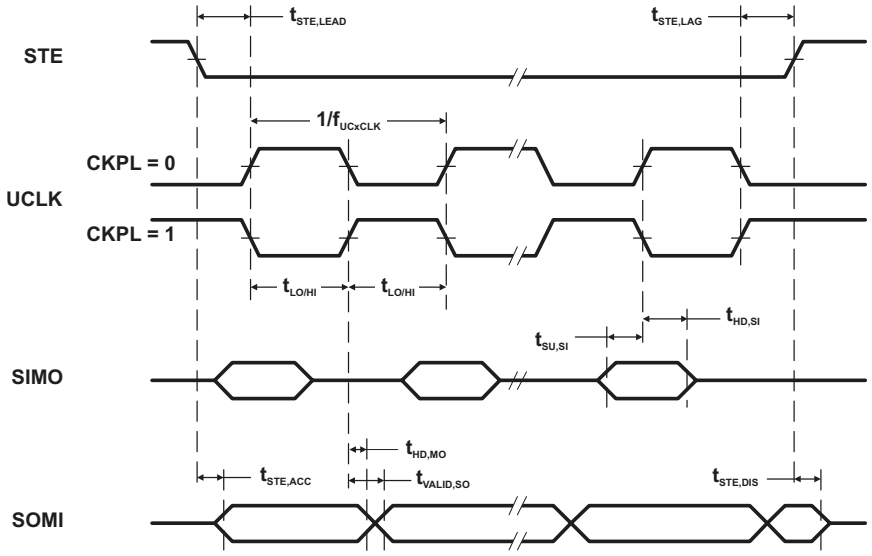

Figure 19. SPI Slave Mode, CKPH = 1

Copyright © 2011–2013, Texas Instruments Incorporated

USCI (I2C Mode)

over recommended ranges of supply voltage and operating free-air temperature (unless otherwise noted) (see Figure 20)

PARAMETER		TEST CONDITIONS	V_{CC}	MIN	TYP	MAX	UNIT
f_{USCI}	USCI input clock frequency	SMCLK, duty cycle = 50% ± 10%				f_{SYSTEM}	MHz
f_{SCL}	SCL clock frequency		3 V	0		400	kHz
$t_{HD,STA}$	Hold time (repeated) START	f_{SCL} ≤ 100 kHz	3 V	4.0			µs
		f_{SCL} > 100 kHz		0.6			
$t_{SU,STA}$	Setup time for a repeated START	f_{SCL} ≤ 100 kHz	3 V	4.7			µs
		f_{SCL} > 100 kHz		0.6			
$t_{HD,DAT}$	Data hold time		3 V	0			ns
$t_{SU,DAT}$	Data setup time		3 V	250			ns
$t_{SU,STO}$	Setup time for STOP		3 V	4.0			µs
t_{SP}	Pulse width of spikes suppressed by input filter		3 V	50	100	600	ns

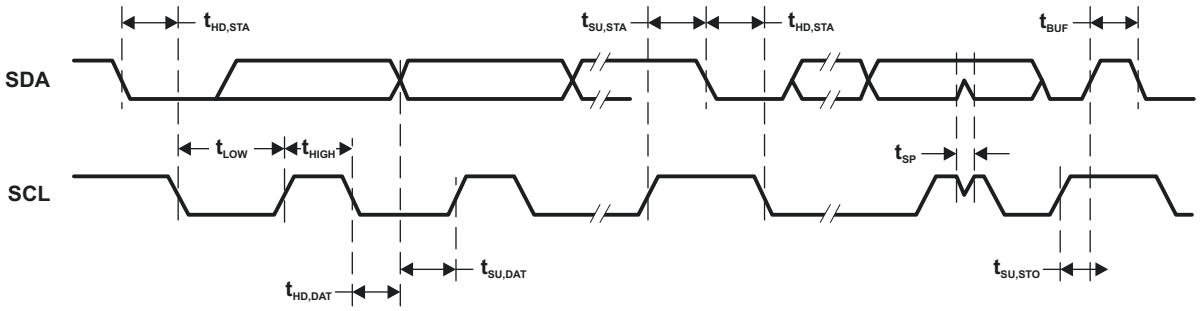

Figure 20. I2C Mode Timing

Comparator_A+

over recommended ranges of supply voltage and operating free-air temperature (unless otherwise noted)

PARAMETER		TEST CONDITIONS	V_{CC}	MIN	TYP	MAX	UNIT
$I_{(DD)}$ (1)		CAON = 1, CARSEL = 0, CAREF = 0	3 V		45		µA
$I_{(Refladder/RefDiode)}$		CAON = 1, CARSEL = 0, CAREF = 1, 2, or 3, No load at CA0 and CA1	3 V		45		µA
$V_{(IC)}$	Common–mode input voltage	CAON = 1	3 V	0		V_{CC}-1	V
$V_{(Ref025)}$	(Voltage at 0.25 V_{CC} node) / V_{CC}	PCA0 = 1, CARSEL = 1, CAREF = 1, No load at CA0 and CA1	3 V		0.24		
$V_{(Ref050)}$	(Voltage at 0.5 V_{CC} node) / V_{CC}	PCA0 = 1, CARSEL = 1, CAREF = 2, No load at CA0 and CA1	3 V		0.48		
$V_{(RefVT)}$	See Figure 21 and Figure 22	PCA0 = 1, CARSEL = 1, CAREF = 3, No load at CA0 and CA1, TA = 85°C	3 V		490		mV
$V_{(offset)}$	Offset voltage (2)		3 V		±10		mV
V_{hys}	Input hysteresis	CAON = 1	3 V		0.7		mV
$t_{(response)}$	Response time (low-high and high-low)	T_A = 25°C, Overdrive 10 mV, Without filter: CAF = 0	3 V		120		ns
		T_A = 25°C, Overdrive 10 mV, With filter: CAF = 1			1.5		µs

(1) The leakage current for the Comparator_A+ terminals is identical to $I_{lkg(Px.y)}$ specification.
(2) The input offset voltage can be cancelled by using the CAEX bit to invert the Comparator_A+ inputs on successive measurements. The two successive measurements are then summed together.

Copyright © 2011–2013, Texas Instruments Incorporated

Typical Characteristics – Comparator_A+

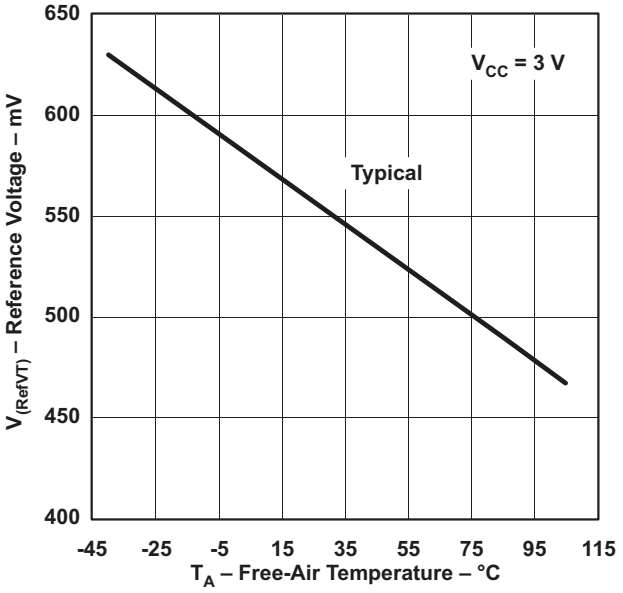

Figure 21. $V_{(RefVT)}$ vs Temperature, V_{CC} = 3 V

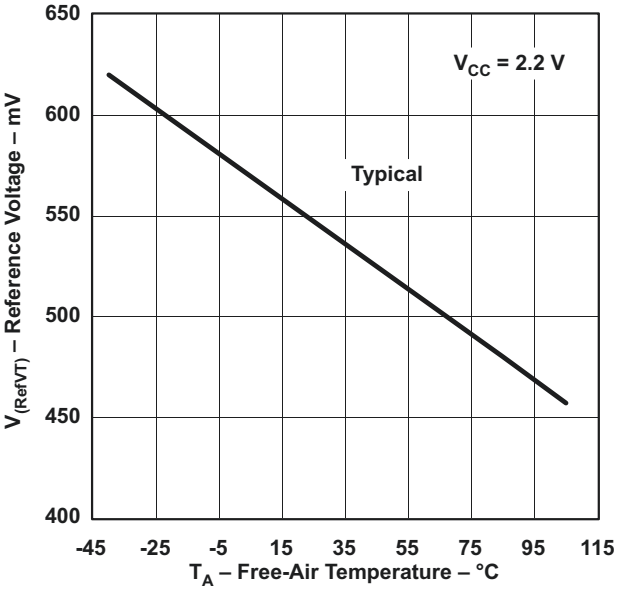

Figure 22. $V_{(RefVT)}$ vs Temperature, V_{CC} = 2.2 V

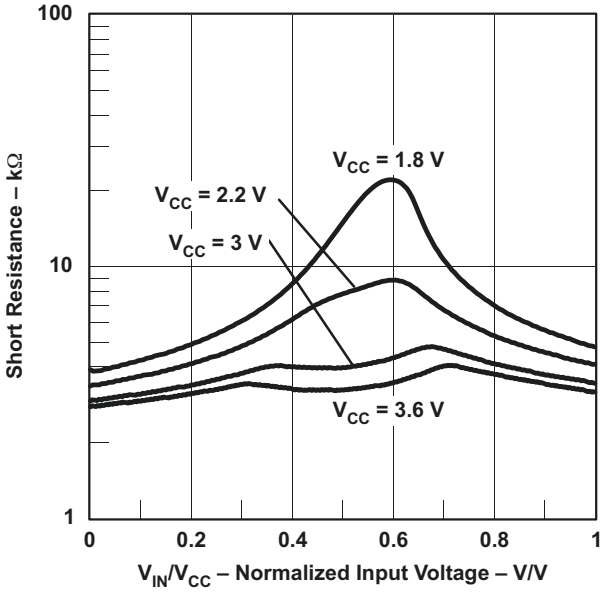

Figure 23. Short Resistance vs V_{IN}/V_{CC}

Copyright © 2011–2013, Texas Instruments Incorporated

10-Bit ADC, Power Supply and Input Range Conditions (MSP430G2x53 Only)

over recommended ranges of supply voltage and operating free-air temperature (unless otherwise noted)(1)

PARAMETER		TEST CONDITIONS	T_A	V_{CC}	MIN	TYP	MAX	UNIT
V_{CC}	Analog supply voltage	V_{SS} = 0 V			2.2		3.6	V
V_{Ax}	Analog input voltage(2)	All Ax terminals, Analog inputs selected in ADC10AE register		3 V	0		V_{CC}	V
I_{ADC10}	ADC10 supply current(3)	$f_{ADC10CLK}$ = 5.0 MHz, ADC10ON = 1, REFON = 0, ADC10SHT0 = 1, ADC10SHT1 = 0, ADC10DIV = 0	25°C	3 V		0.6		mA
I_{REF+}	Reference supply current, reference buffer disabled(4)	$f_{ADC10CLK}$ = 5.0 MHz, ADC10ON = 0, REF2_5V = 0, REFON = 1, REFOUT = 0	25°C	3 V		0.25		mA
		$f_{ADC10CLK}$ = 5.0 MHz, ADC10ON = 0, REF2_5V = 1, REFON = 1, REFOUT = 0				0.25		
$I_{REFB,0}$	Reference buffer supply current with ADC10SR = 0(4)	$f_{ADC10CLK}$ = 5.0 MHz, ADC10ON = 0, REFON = 1, REF2_5V = 0, REFOUT = 1, ADC10SR = 0	25°C	3 V		1.1		mA
$I_{REFB,1}$	Reference buffer supply current with ADC10SR = 1(4)	$f_{ADC10CLK}$ = 5.0 MHz, ADC10ON = 0, REFON = 1, REF2_5V = 0, REFOUT = 1, ADC10SR = 1	25°C	3 V		0.5		mA
C_I	Input capacitance	Only one terminal Ax can be selected at one time	25°C	3 V			27	pF
R_I	Input MUX ON resistance	0 V ≤ V_{Ax} ≤ V_{CC}	25°C	3 V		1000		Ω

(1) The leakage current is defined in the leakage current table with Px.y/Ax parameter.
(2) The analog input voltage range must be within the selected reference voltage range V_{R+} to V_{R-} for valid conversion results.
(3) The internal reference supply current is not included in current consumption parameter I_{ADC10}.
(4) The internal reference current is supplied via terminal V_{CC}. Consumption is independent of the ADC10ON control bit, unless a conversion is active. The REFON bit enables the built-in reference to settle before starting an A/D conversion.

Copyright © 2011–2013, Texas Instruments Incorporated

10-Bit ADC, Built-In Voltage Reference (MSP430G2x53 Only)

over recommended ranges of supply voltage and operating free-air temperature (unless otherwise noted)

PARAMETER		TEST CONDITIONS	V_{CC}	MIN	TYP	MAX	UNIT
$V_{CC,REF+}$	Positive built-in reference analog supply voltage range	I_{VREF+} ≤ 1 mA, REF2_5V = 0		2.2			V
		I_{VREF+} ≤ 1 mA, REF2_5V = 1		2.9			
V_{REF+}	Positive built-in reference voltage	I_{VREF+} ≤ I_{VREF+}max, REF2_5V = 0	3 V	1.41	1.5	1.59	V
		I_{VREF+} ≤ I_{VREF+}max, REF2_5V = 1		2.35	2.5	2.65	
$I_{LD,VREF+}$	Maximum VREF+ load current		3 V			±1	mA
	VREF+ load regulation	I_{VREF+} = 500 µA ± 100 µA, Analog input voltage V_{Ax} ≯ 0.75 V, REF2_5V = 0	3 V			±2	LSB
		I_{VREF+} = 500 µA ± 100 µA, Analog input voltage V_{Ax} ≯ 1.25 V, REF2_5V = 1				±2	
	V_{REF+} load regulation response time	I_{VREF+} = 100 µA→900 µA, V_{Ax} ≯ 0.5 × VREF+, Error of conversion result ≤ 1 LSB, ADC10SR = 0	3 V			400	ns
C_{VREF+}	Maximum capacitance at pin VREF+	I_{VREF+} ≤ ±1 mA, REFON = 1, REFOUT = 1	3 V			100	pF
TC_{REF+}	Temperature coefficient(1)	I_{VREF+} = const with 0 mA ≤ I_{VREF+} ≤ 1 mA	3 V			±100	ppm/°C
t_{REFON}	Settling time of internal reference voltage to 99.9% VREF	I_{VREF+} = 0.5 mA, REF2_5V = 0, REFON = 0 → 1	3.6 V			30	µs
$t_{REFBURST}$	Settling time of reference buffer to 99.9% VREF	I_{VREF+} = 0.5 mA, REF2_5V = 1, REFON = 1, REFBURST = 1, ADC10SR = 0	3 V			2	µs

(1) Calculated using the box method: (MAX(-40 to 85°C) – MIN(-40 to 85°C)) / MIN(-40 to 85°C) / (85°C – (–40°C))

Copyright © 2011–2013, Texas Instruments Incorporated

10-Bit ADC, External Reference[1] (MSP430G2x53 Only)

over recommended ranges of supply voltage and operating free-air temperature (unless otherwise noted)

PARAMETER		TEST CONDITIONS	V_{CC}	MIN	TYP	MAX	UNIT
VEREF+	Positive external reference input voltage range [2]	VEREF+ > VEREF–, SREF1 = 1, SREF0 = 0		1.4		V_{CC}	V
		VEREF– ≤ VEREF+ ≤ V_{CC} – 0.15 V, SREF1 = 1, SREF0 = 1 [3]		1.4		3	
VEREF–	Negative external reference input voltage range [4]	VEREF+ > VEREF–		0		1.2	V
ΔVEREF	Differential external reference input voltage range, ΔVEREF = VEREF+ – VEREF–	VEREF+ > VEREF– [5]		1.4		V_{CC}	V
I_{VEREF+}	Static input current into VEREF+	0 V ≤ VEREF+ ≤ V_{CC}, SREF1 = 1, SREF0 = 0	3 V		±1		μA
		0 V ≤ VEREF+ ≤ V_{CC} – 0.15 V ≤ 3 V, SREF1 = 1, SREF0 = 1 [3]	3 V		0		
I_{VEREF-}	Static input current into VEREF–	0 V ≤ VEREF– ≤ V_{CC}	3 V		±1		μA

(1) The external reference is used during conversion to charge and discharge the capacitance array. The input capacitance, C_I, is also the dynamic load for an external reference during conversion. The dynamic impedance of the reference supply should follow the recommendations on analog-source impedance to allow the charge to settle for 10-bit accuracy.
(2) The accuracy limits the minimum positive external reference voltage. Lower reference voltage levels may be applied with reduced accuracy requirements.
(3) Under this condition the external reference is internally buffered. The reference buffer is active and requires the reference buffer supply current I_{REFB}. The current consumption can be limited to the sample and conversion period with REBURST = 1.
(4) The accuracy limits the maximum negative external reference voltage. Higher reference voltage levels may be applied with reduced accuracy requirements.
(5) The accuracy limits the minimum external differential reference voltage. Lower differential reference voltage levels may be applied with reduced accuracy requirements.

10-Bit ADC, Timing Parameters (MSP430G2x53 Only)

over recommended ranges of supply voltage and operating free-air temperature (unless otherwise noted)

PARAMETER		TEST CONDITIONS		V_{CC}	MIN	TYP	MAX	UNIT
$f_{ADC10CLK}$	ADC10 input clock frequency	For specified performance of ADC10 linearity parameters	ADC10SR = 0	3 V	0.45		6.3	MHz
			ADC10SR = 1		0.45		1.5	
$f_{ADC10OSC}$	ADC10 built-in oscillator frequency	ADC10DIVx = 0, ADC10SSELx = 0, $f_{ADC10CLK}$ = $f_{ADC10OSC}$		3 V	3.7		6.3	MHz
$t_{CONVERT}$	Conversion time	ADC10 built-in oscillator, ADC10SSELx = 0, $f_{ADC10CLK}$ = $f_{ADC10OSC}$		3 V	2.06		3.51	μs
		$f_{ADC10CLK}$ from ACLK, MCLK, or SMCLK: ADC10SSELx ≠ 0			13 × ADC10DIV × 1/$f_{ADC10CLK}$			
$t_{ADC10ON}$	Turn-on settling time of the ADC	[1]					100	ns

(1) The condition is that the error in a conversion started after $t_{ADC10ON}$ is less than ±0.5 LSB. The reference and input signal are already settled.

10-Bit ADC, Linearity Parameters (MSP430G2x53 Only)

over recommended ranges of supply voltage and operating free-air temperature (unless otherwise noted)

PARAMETER		TEST CONDITIONS	V_{CC}	MIN	TYP	MAX	UNIT
E_I	Integral linearity error		3 V			±1	LSB
E_D	Differential linearity error		3 V			±1	LSB
E_O	Offset error	Source impedance R_S < 100 Ω	3 V			±1	LSB
E_G	Gain error		3 V		±1.1	±2	LSB
E_T	Total unadjusted error		3 V		±2	±5	LSB

Copyright © 2011–2013, Texas Instruments Incorporated

10-Bit ADC, Temperature Sensor and Built-In V_{MID} (MSP430G2x53 Only)

over recommended ranges of supply voltage and operating free-air temperature (unless otherwise noted)

PARAMETER		TEST CONDITIONS	V_{CC}	MIN	TYP	MAX	UNIT
I_{SENSOR}	Temperature sensor supply current (1)	REFON = 0, INCHx = 0Ah, T_A = 25°C	3 V		60		µA
TC_{SENSOR}		ADC10ON = 1, INCHx = 0Ah (2)	3 V		3.55		mV/°C
$t_{Sensor(sample)}$	Sample time required if channel 10 is selected (3)	ADC10ON = 1, INCHx = 0Ah, Error of conversion result ≤ 1 LSB	3 V	30			µs
I_{VMID}	Current into divider at channel 11	ADC10ON = 1, INCHx = 0Bh	3 V			(4)	µA
V_{MID}	V_{CC} divider at channel 11	ADC10ON = 1, INCHx = 0Bh, $V_{MID} \neq 0.5 \times V_{CC}$	3 V		1.5		V
$t_{VMID(sample)}$	Sample time required if channel 11 is selected (5)	ADC10ON = 1, INCHx = 0Bh, Error of conversion result ≤ 1 LSB	3 V	1220			ns

(1) The sensor current I_{SENSOR} is consumed if (ADC10ON = 1 and REFON = 1) or (ADC10ON = 1 and INCH = 0Ah and sample signal is high). When REFON = 1, I_{SENSOR} is included in I_{REF+}. When REFON = 0, I_{SENSOR} applies during conversion of the temperature sensor input (INCH = 0Ah).
(2) The following formula can be used to calculate the temperature sensor output voltage:
$V_{Sensor,typ} = TC_{Sensor}$ (273 + T [°C]) + $V_{Offset,sensor}$ [mV] or
$V_{Sensor,typ} = TC_{Sensor}$ T [°C] + $V_{Sensor}(T_A = 0°C)$ [mV]
(3) The typical equivalent impedance of the sensor is 51 kΩ. The sample time required includes the sensor-on time $t_{SENSOR(on)}$.
(4) No additional current is needed. The V_{MID} is used during sampling.
(5) The on-time $t_{VMID(on)}$ is included in the sampling time $t_{VMID(sample)}$; no additional on time is needed.

Flash Memory

over recommended ranges of supply voltage and operating free-air temperature (unless otherwise noted)

PARAMETER		TEST CONDITIONS	V_{CC}	MIN	TYP	MAX	UNIT
$V_{CC(PGM/ERASE)}$	Program and erase supply voltage			2.2		3.6	V
f_{FTG}	Flash timing generator frequency			257		476	kHz
I_{PGM}	Supply current from V_{CC} during program		2.2 V, 3.6 V		1	5	mA
I_{ERASE}	Supply current from V_{CC} during erase		2.2 V, 3.6 V		1	7	mA
t_{CPT}	Cumulative program time (1)		2.2 V, 3.6 V			10	ms
$t_{CMErase}$	Cumulative mass erase time		2.2 V, 3.6 V	20			ms
	Program/erase endurance			10^4	10^5		cycles
$t_{Retention}$	Data retention duration	T_J = 25°C		100			years
t_{Word}	Word or byte program time	(2)			30		t_{FTG}
$t_{Block, 0}$	Block program time for first byte or word	(2)			25		t_{FTG}
$t_{Block, 1-63}$	Block program time for each additional byte or word	(2)			18		t_{FTG}
$t_{Block, End}$	Block program end-sequence wait time	(2)			6		t_{FTG}
$t_{Mass\ Erase}$	Mass erase time	(2)			10593		t_{FTG}
$t_{Seg\ Erase}$	Segment erase time	(2)			4819		t_{FTG}

(1) The cumulative program time must not be exceeded when writing to a 64-byte flash block. This parameter applies to all programming methods: individual word/byte write and block write modes.
(2) These values are hardwired into the Flash Controller's state machine ($t_{FTG} = 1/f_{FTG}$).

Copyright © 2011–2013, Texas Instruments Incorporated

RAM

over recommended ranges of supply voltage and operating free-air temperature (unless otherwise noted)

PARAMETER		TEST CONDITIONS	MIN	MAX	UNIT
$V_{(RAMh)}$	RAM retention supply voltage (1)	CPU halted	1.6		V

(1) This parameter defines the minimum supply voltage V_{CC} when the data in RAM remains unchanged. No program execution should happen during this supply voltage condition.

JTAG and Spy-Bi-Wire Interface

over recommended ranges of supply voltage and operating free-air temperature (unless otherwise noted)

PARAMETER		TEST CONDITIONS	V_{CC}	MIN	TYP	MAX	UNIT
f_{SBW}	Spy-Bi-Wire input frequency		2.2 V	0		20	MHz
$t_{SBW,Low}$	Spy-Bi-Wire low clock pulse duration		2.2 V	0.025		15	µs
$t_{SBW,En}$	Spy-Bi-Wire enable time (TEST high to acceptance of first clock edge(1))		2.2 V			1	µs
$t_{SBW,Ret}$	Spy-Bi-Wire return to normal operation time		2.2 V	15		100	µs
f_{TCK}	TCK input frequency(2)		2.2 V	0		5	MHz
$R_{Internal}$	Internal pulldown resistance on TEST		2.2 V	25	60	90	kΩ

(1) Tools accessing the Spy-Bi-Wire interface need to wait for the maximum $t_{SBW,En}$ time after pulling the TEST/SBWTCK pin high before applying the first SBWTCK clock edge.
(2) f_{TCK} may be restricted to meet the timing requirements of the module selected.

JTAG Fuse(1)

over recommended ranges of supply voltage and operating free-air temperature (unless otherwise noted)

PARAMETER		TEST CONDITIONS	MIN	MAX	UNIT
$V_{CC(FB)}$	Supply voltage during fuse-blow condition	T_A = 25°C	2.5		V
V_{FB}	Voltage level on TEST for fuse blow		6	7	V
I_{FB}	Supply current into TEST during fuse blow			100	mA
t_{FB}	Time to blow fuse			1	ms

(1) Once the fuse is blown, no further access to the JTAG/Test, Spy-Bi-Wire, and emulation feature is possible, and JTAG is switched to bypass mode.

Copyright © 2011–2013, Texas Instruments Incorporated

PORT SCHEMATICS

Port P1 Pin Schematic: P1.0 to P1.2, Input/Output With Schmitt Trigger

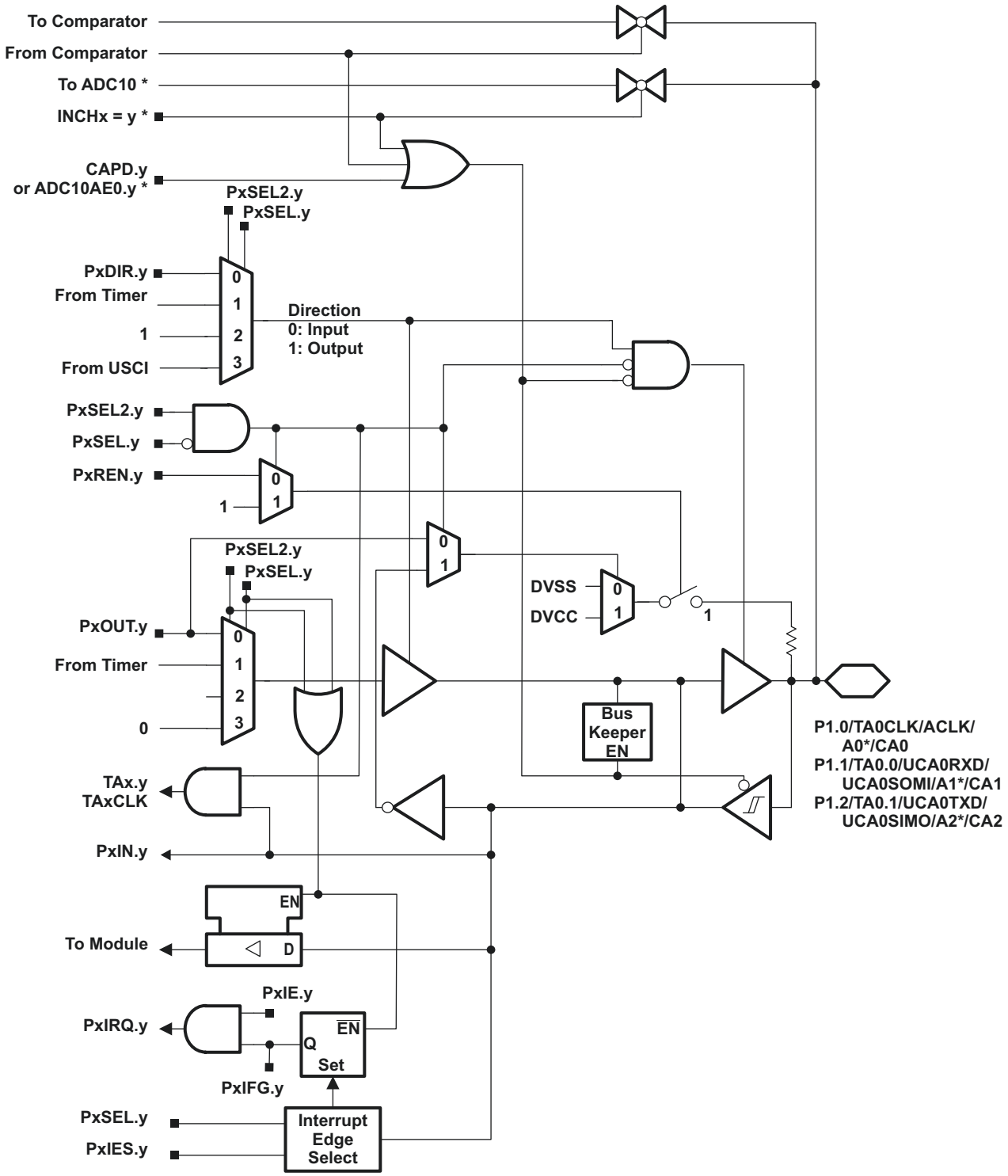

* Note: MSP430G2x53 devices only. MSP430G2x13 devices have no ADC10.

Copyright © 2011–2013, Texas Instruments Incorporated

Table 16. Port P1 (P1.0 to P1.2) Pin Functions

PIN NAME (P1.x)	x	FUNCTION	CONTROL BITS AND SIGNALS (1)				
			P1DIR.x	P1SEL.x	P1SEL2.x	ADC10AE.x INCH.x=1 (2)	CAPD.y
P1.0/	0	P1.x (I/O)	I: 0; O: 1	0	0	0	0
TA0CLK/		TA0.TACLK	0	1	0	0	0
ACLK/		ACLK	1	1	0	0	0
A0 (2)/		A0	X	X	X	1 (y = 0)	0
CA0/		CA0	X	X	X	0	1 (y = 0)
Pin Osc		Capacitive sensing	X	0	1	0	0
P1.1/	1	P1.x (I/O)	I: 0; O: 1	0	0	0	0
TA0.0/		TA0.0	1	1	0	0	0
		TA0.CCI0A	0	1	0	0	0
UCA0RXD/		UCA0RXD	from USCI	1	1	0	0
UCA0SOMI/		UCA0SOMI	from USCI	1	1	0	0
A1 (2)/		A1	X	X	X	1 (y = 1)	0
CA1/		CA1	X	X	X	0	1 (y = 1)
Pin Osc		Capacitive sensing	X	0	1	0	0
P1.2/	2	P1.x (I/O)	I: 0; O: 1	0	0	0	0
TA0.1/		TA0.1	1	1	0	0	0
		TA0.CCI1A	0	1	0	0	0
UCA0TXD/		UCA0TXD	from USCI	1	1	0	0
UCA0SIMO/		UCA0SIMO	from USCI	1	1	0	0
A2 (2)/		A2	X	X	X	1 (y = 2)	0
CA2/		CA2	X	X	X	0	1 (y = 2)
Pin Osc		Capacitive sensing	X	0	1	0	0

(1) X = don't care
(2) MSP430G2x53 devices only

Copyright © 2011–2013, Texas Instruments Incorporated

Port P1 Pin Schematic: P1.3, Input/Output With Schmitt Trigger

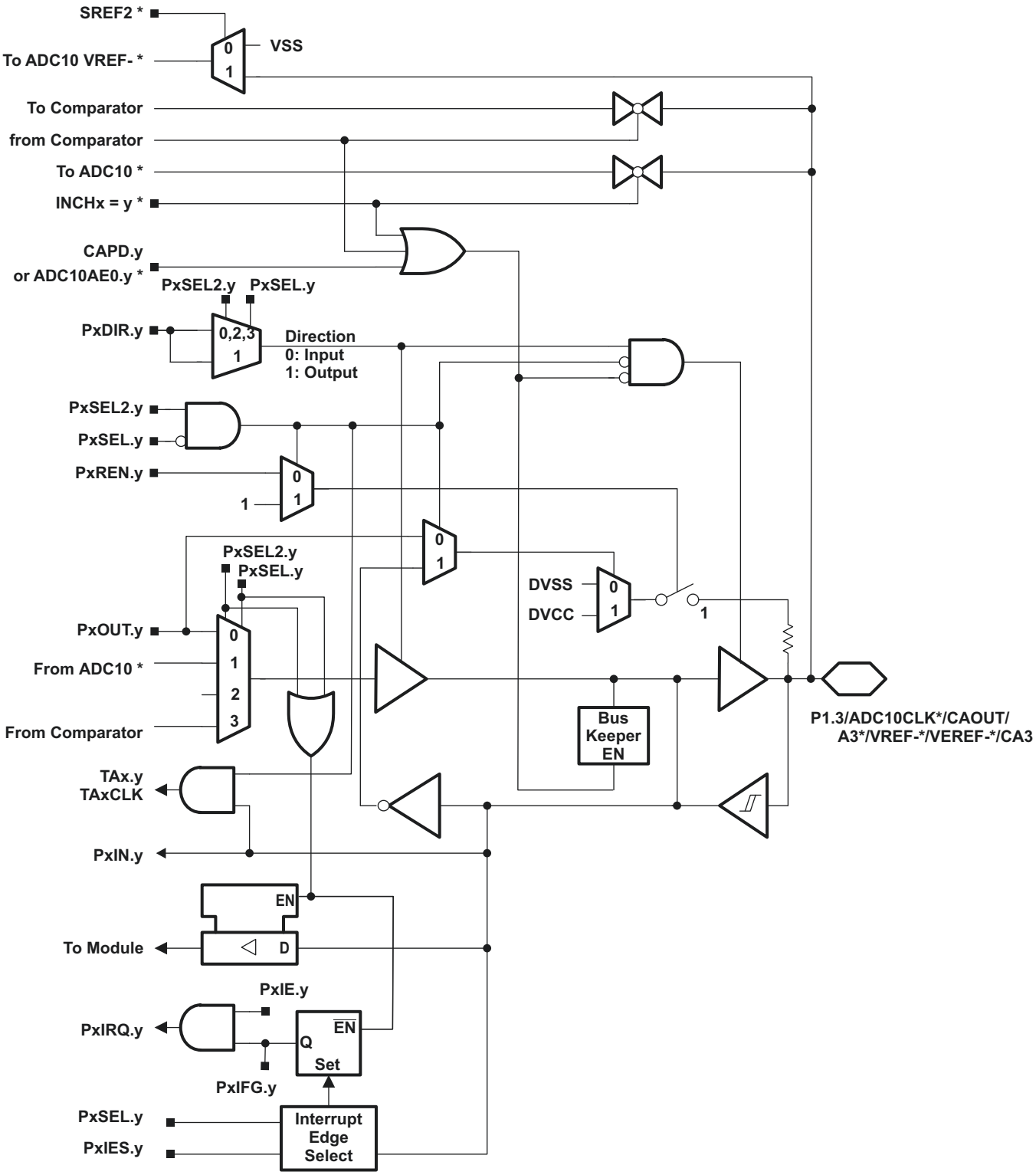

* Note: MSP430G2x53 devices only. MSP430G2x13 devices have no ADC10.

Copyright © 2011–2013, Texas Instruments Incorporated

Table 17. Port P1 (P1.3) Pin Functions

PIN NAME (P1.x)	x	FUNCTION	CONTROL BITS AND SIGNALS (1)				
			P1DIR.x	P1SEL.x	P1SEL2.x	ADC10AE.x INCH.x=1 (2)	CAPD.y
P1.3/	3	P1.x (I/O)	I: 0; O: 1	0	0	0	0
ADC10CLK(2)/		ADC10CLK	1	1	0	0	0
CAOUT/		CAOUT	1	1	1	0	0
A3(2)/		A3	X	X	X	1 (y = 3)	0
VREF-(2)/		VREF-	X	X	X	1	0
VEREF-(2)/		VEREF-	X	X	X	1	0
CA3/		CA3	X	X	X	0	1 (y = 3)
Pin Osc		Capacitive sensing	X	0	1	0	0

(1) X = don't care
(2) MSP430G2x53 devices only

Port P1 Pin Schematic: P1.4, Input/Output With Schmitt Trigger

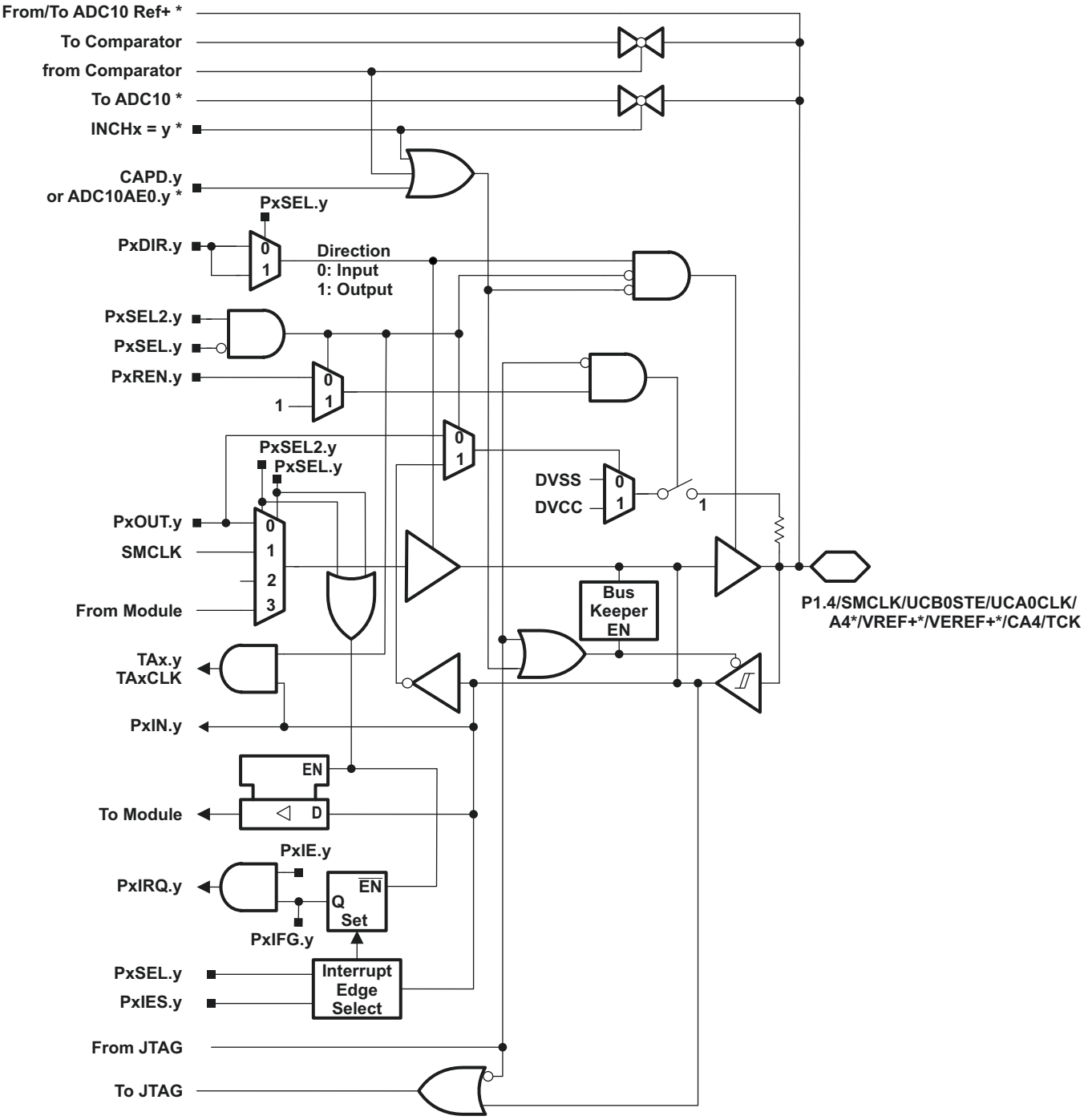

* Note: MSP430G2x52 devices only. MSP430G2x12 devices have no ADC10.

Copyright © 2011–2013, Texas Instruments Incorporated

Table 18. Port P1 (P1.4) Pin Functions

PIN NAME (P1.x)	x	FUNCTION	CONTROL BITS AND SIGNALS (1)					
			P1DIR.x	P1SEL.x	P1SEL2.x	ADC10AE.x INCH.x=1 (2)	JTAG Mode	CAPD.y
P1.4/	4	P1.x (I/O)	I: 0; O: 1	0	0	0	0	0
SMCLK/		SMCLK	1	1	0	0	0	0
UCB0STE/		UCB0STE	from USCI	1	1	0	0	0
UCA0CLK/		UCA0CLK	from USCI	1	1	0	0	0
VREF+ (2)/		VREF+	X	X	X	1	0	0
VEREF+ (2)/		VEREF+	X	X	X	1	0	0
A4 (2)/		A4	X	X	X	1 (y = 4)	0	0
CA4		CA4	X	X	X	0	0	1 (y = 4)
TCK/		TCK	X	X	X	0	1	0
Pin Osc		Capacitive sensing	X	0	1	0	0	0

(1) X = don't care
(2) MSP430G2x53 devices only

Port P1 Pin Schematic: P1.5 to P1.7, Input/Output With Schmitt Trigger

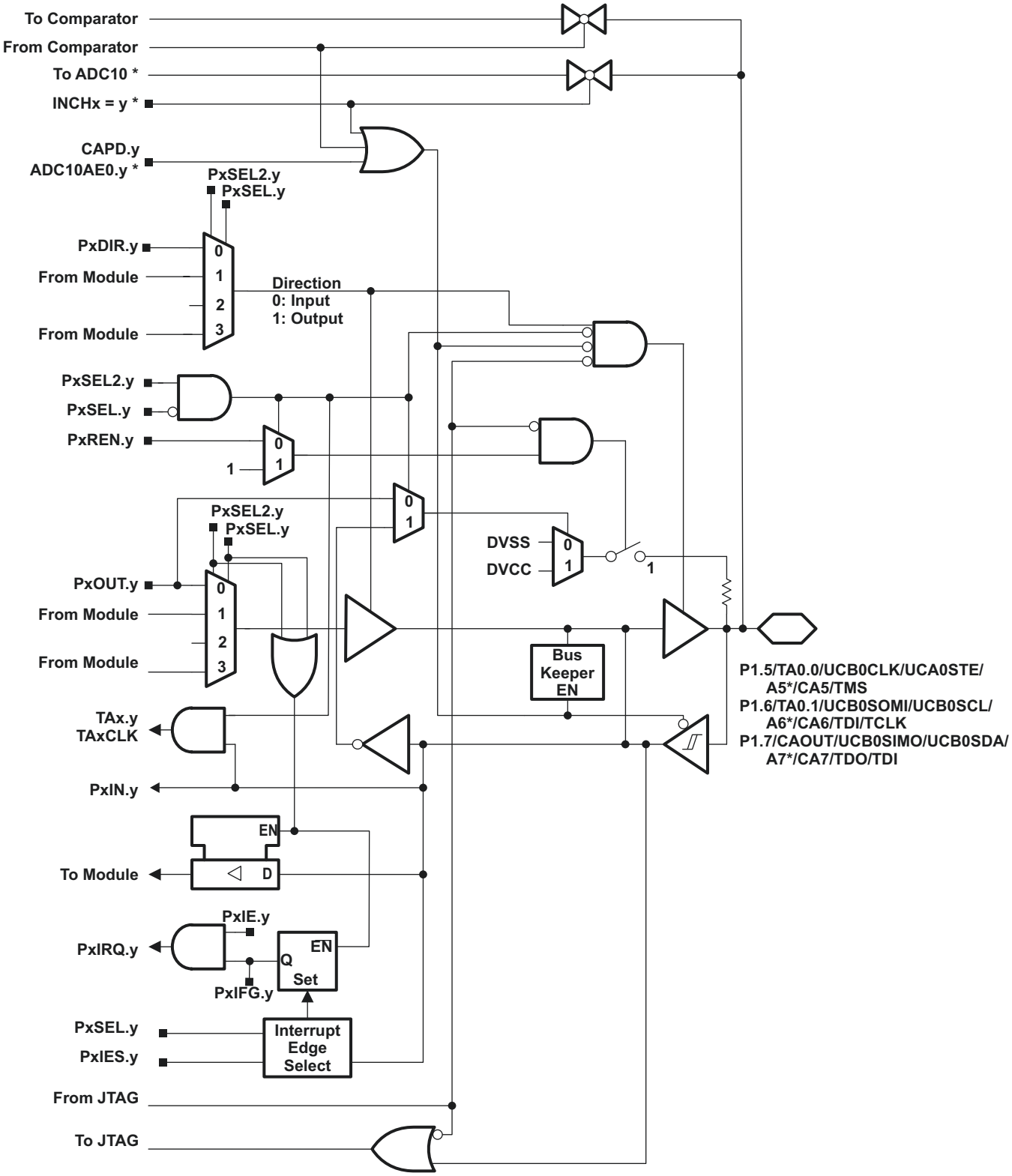

*** Note: MSP430G2x53 devices only. MSP430G2x13 devices have no ADC10.**

Copyright © 2011–2013, Texas Instruments Incorporated

Table 19. Port P1 (P1.5 to P1.7) Pin Functions

PIN NAME (P1.x)	x	FUNCTION	CONTROL BITS AND SIGNALS (1)					
			P1DIR.x	P1SEL.x	P1SEL2.x	ADC10AE.x INCH.x=1 (2)	JTAG Mode	CAPD.y
P1.5/	5	P1.x (I/O)	I: 0; O: 1	0	0	0	0	0
TA0.0/		TA0.0	1	1	0	0	0	0
UCB0CLK/		UCB0CLK	from USCI	1	1	0	0	0
UCA0STE/		UCA0STE	from USCI	1	1	0	0	0
A5 (2)/		A5	X	X	X	1 (y = 5)	0	0
CA5		CA5	X	X	X	0	0	1 (y = 5)
TMS		TMS	X	X	X	0	1	0
Pin Osc		Capacitive sensing	X	0	1	0	0	0
P1.6/	6	P1.x (I/O)	I: 0; O: 1	0	0	0	0	0
TA0.1/		TA0.1	1	1	0	0	0	0
UCB0SOMI/		UCB0SOMI	from USCI	1	1	0	0	0
UCB0SCL/		UCB0SCL	from USCI	1	1	0	0	0
A6 (2)/		A6	X	X	X	1 (y = 6)	0	0
CA6		CA6	X	X	X	0	0	1 (y = 6)
TDI/TCLK/		TDI/TCLK	X	X	X	0	1	0
Pin Osc		Capacitive sensing	X	0	1	0	0	0
P1.7/	7	P1.x (I/O)	I: 0; O: 1	0	0	0	0	0
UCB0SIMO/		UCB0SIMO	from USCI	1	1	0	0	0
UCB0SDA/		UCB0SDA	from USCI	1	1	0	0	0
A7 (2)/		A7	X	X	X	1 (y = 7)	0	0
CA7		CA7	X	X	X	0	0	1 (y = 7)
CAOUT		CAOUT	1	1	0	0	0	0
TDO/TDI/		TDO/TDI	X	X	X	0	1	0
Pin Osc		Capacitive sensing	X	0	1	0	0	0

(1) X = don't care
(2) MSP430G2x53 devices only

Copyright © 2011–2013, Texas Instruments Incorporated

Port P2 Pin Schematic: P2.0 to P2.5, Input/Output With Schmitt Trigger

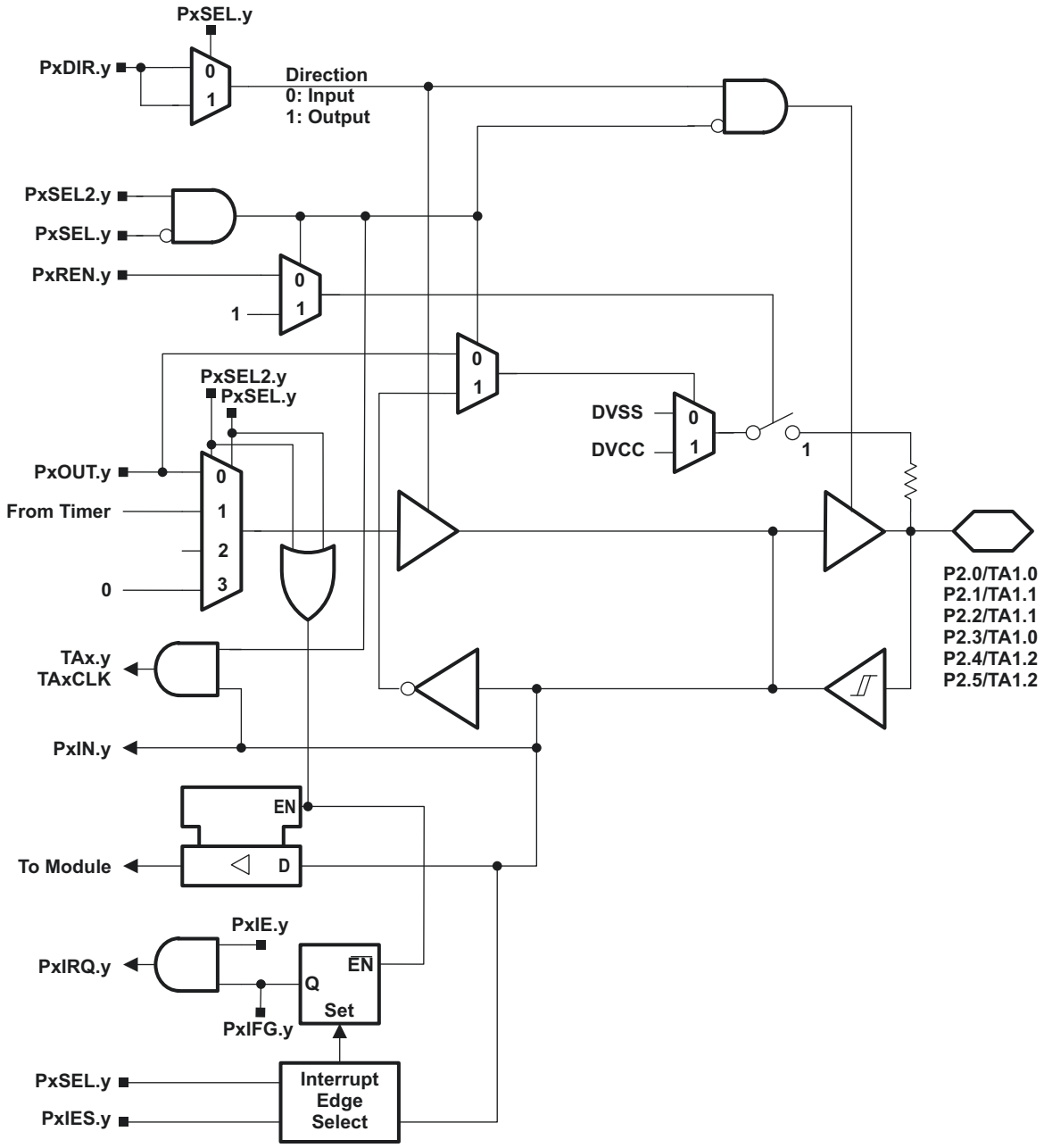

Copyright © 2011–2013, Texas Instruments Incorporated

Table 20. Port P2 (P2.0 to P2.5) Pin Functions

PIN NAME (P2.x)	x	FUNCTION	CONTROL BITS AND SIGNALS (1)		
			P2DIR.x	P2SEL.x	P2SEL2.x
P2.0/	0	P2.x (I/O)	I: 0; O: 1	0	0
TA1.0/		Timer1_A3.CCI0A	0	1	0
		Timer1_A3.TA0	1	1	0
Pin Osc		Capacitive sensing	X	0	1
P2.1/	1	P2.x (I/O)	I: 0; O: 1	0	0
TA1.1/		Timer1_A3.CCI1A	0	1	0
		Timer1_A3.TA1	1	1	0
Pin Osc		Capacitive sensing	X	0	1
P2.2/	2	P2.x (I/O)	I: 0; O: 1	0	0
TA1.1/		Timer1_A3.CCI1B	0	1	0
		Timer1_A3.TA1	1	1	0
Pin Osc		Capacitive sensing	X	0	1
P2.3/	3	P2.x (I/O)	I: 0; O: 1	0	0
TA1.0/		Timer1_A3.CCI0B	0	1	0
		Timer1_A3.TA0	1	1	0
Pin Osc		Capacitive sensing	X	0	1
P2.4/	4	P2.x (I/O)	I: 0; O: 1	0	0
TA1.2/		Timer1_A3.CCI2A	0	1	0
		Timer1_A3.TA2	1	1	0
Pin Osc		Capacitive sensing	X	0	1
P2.5/	5	P2.x (I/O)	I: 0; O: 1	0	0
TA1.2/		Timer1_A3.CCI2B	0	1	0
		Timer1_A3.TA2	1	1	0
Pin Osc		Capacitive sensing	X	0	1

(1) X = don't care

Port P2 Pin Schematic: P2.6, Input/Output With Schmitt Trigger

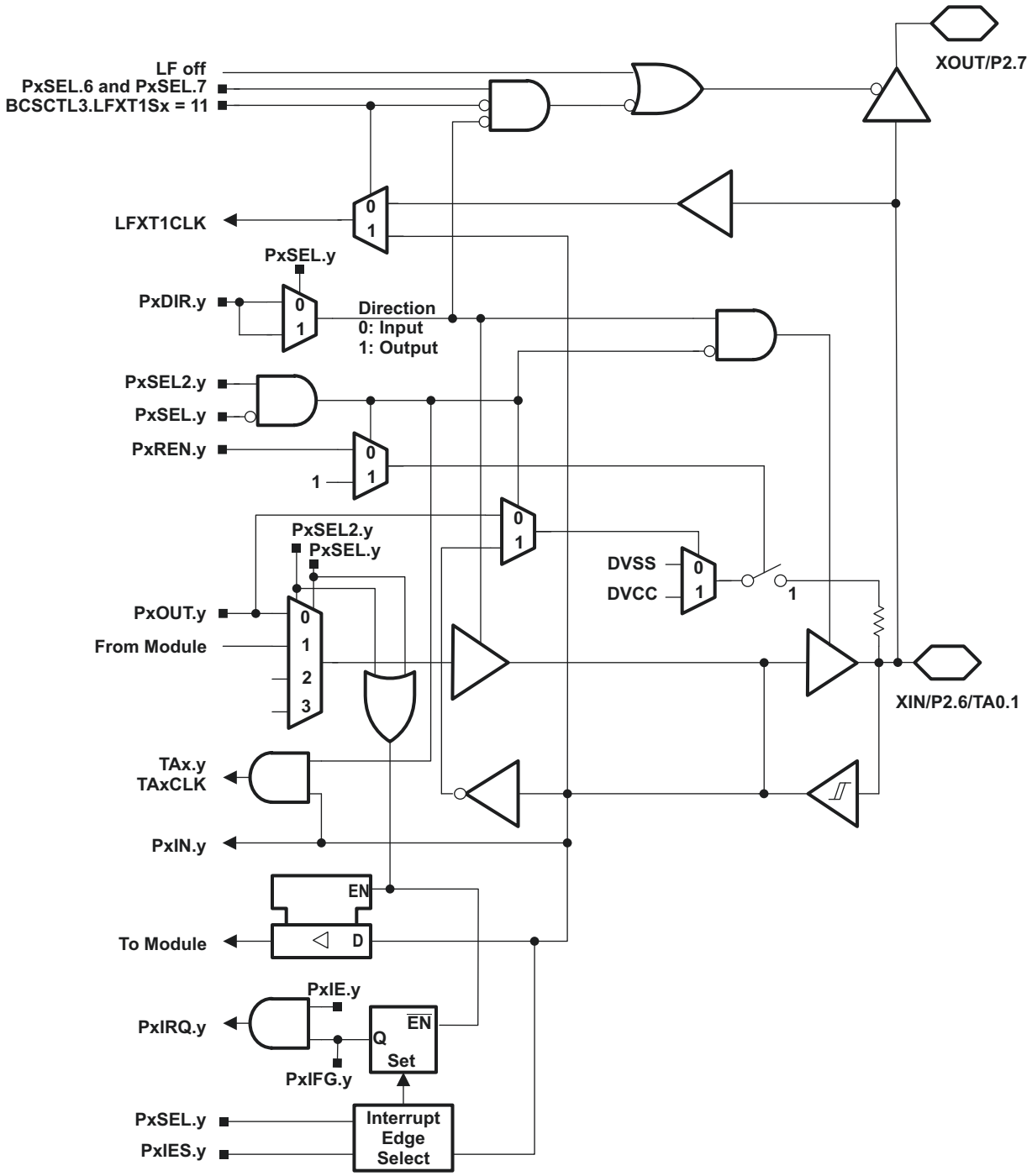

Copyright © 2011–2013, Texas Instruments Incorporated

Table 21. Port P2 (P2.6) Pin Functions

PIN NAME (P2.x)	x	FUNCTION	CONTROL BITS AND SIGNALS (1)		
			P2DIR.x	P2SEL.6 P2SEL.7	P2SEL2.6 P2SEL2.7
XIN	6	XIN	0	1 1	0 0
P2.6		P2.x (I/O)	I: 0; O: 1	0 X	0 0
TA0.1		Timer0_A3.TA1	1	1 0	0 0
Pin Osc		Capacitive sensing	X	0 X	1 X

(1) X = don't care

Port P2 Pin Schematic: P2.7, Input/Output With Schmitt Trigger

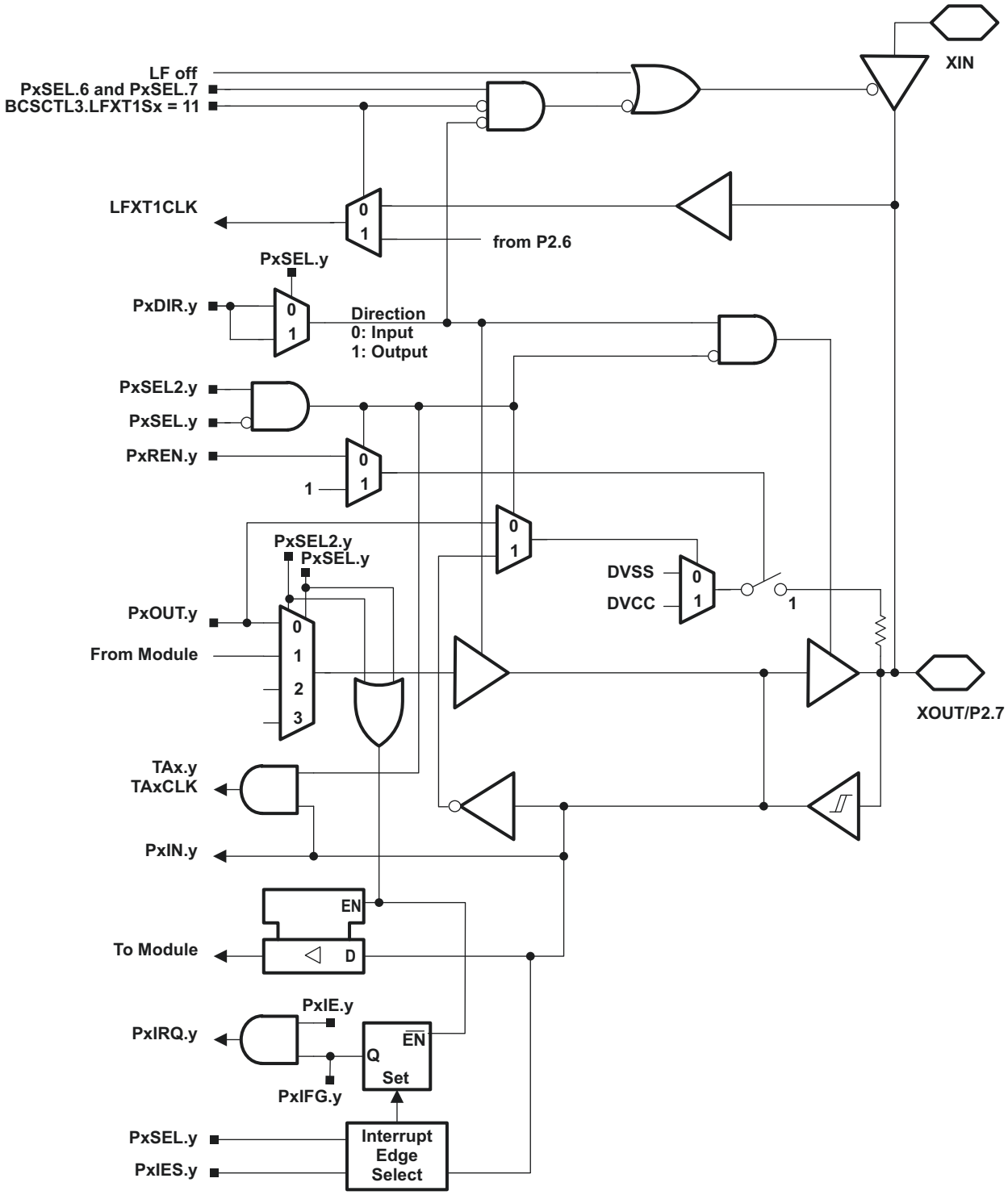

Copyright © 2011–2013, Texas Instruments Incorporated

Table 22. Port P2 (P2.7) Pin Functions

PIN NAME (P2.x)	x	FUNCTION	CONTROL BITS AND SIGNALS (1)		
			P2DIR.x	P2SEL.6 P2SEL.7	P2SEL2.6 P2SEL2.7
XOUT/	7	XOUT	1	1 1	0 0
P2.7/		P2.x (I/O)	I: 0; O: 1	0 X	0 0
Pin Osc		Capacitive sensing	X	0 X	1 X

(1) X = don't care

Port P3 Pin Schematic: P3.0 to P3.7, Input/Output With Schmitt Trigger (28-Pin PW and 32-Pin RHB Packages Only)

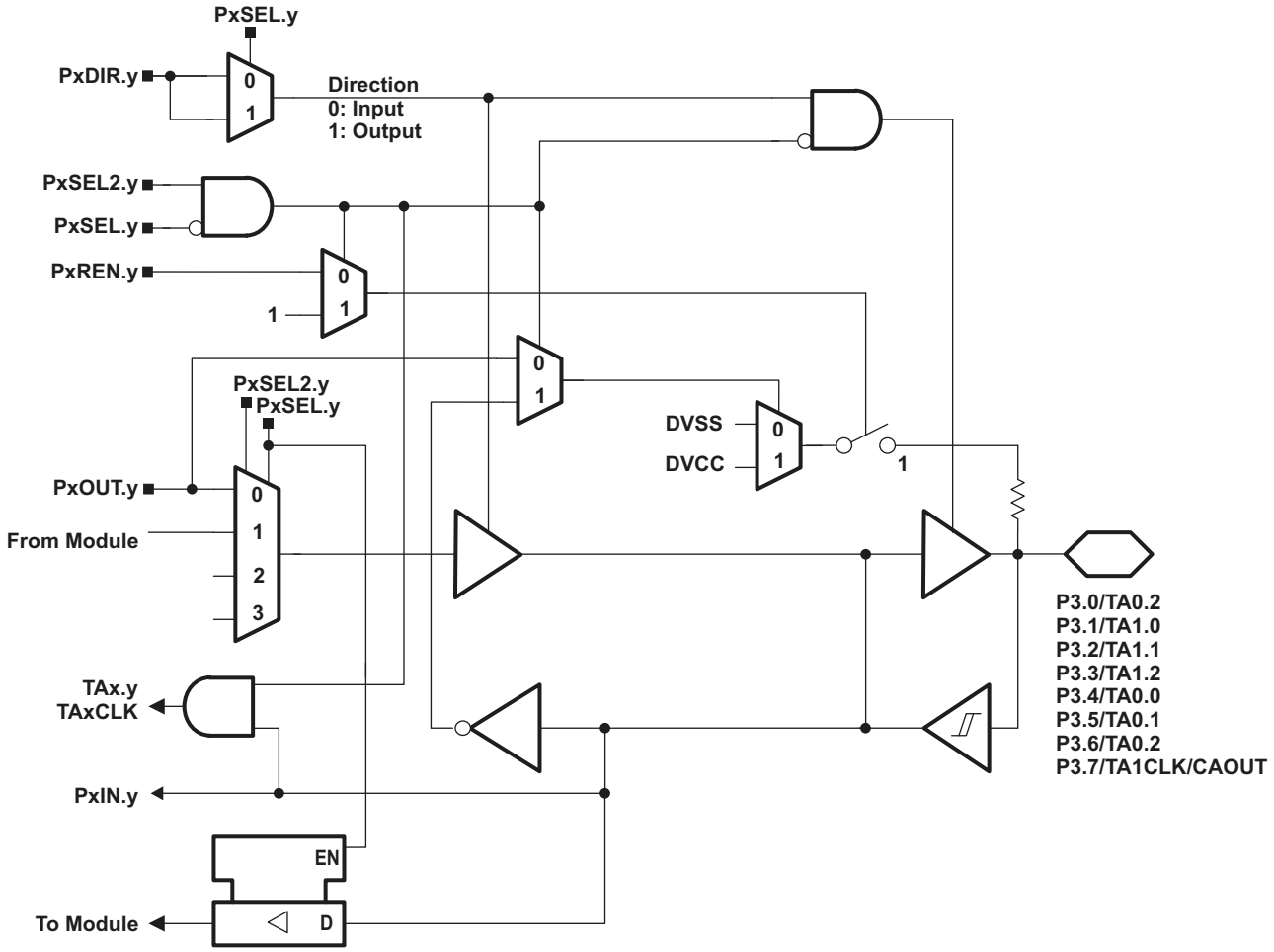

Copyright © 2011–2013, Texas Instruments Incorporated

Table 23. Port P3 (P3.0 to P3.7) Pin Functions (28-Pin PW and 32-Pin RHB Packages Only)

PIN NAME (P3.x)	x	FUNCTION	CONTROL BITS AND SIGNALS (1)		
			P3DIR.x	P3SEL.x	P3SEL2.x
P3.0/	0	P3.x (I/O)	I: 0; O: 1	0	0
TA0.2/		Timer0_A3.CCI2A	0	1	0
		Timer0_A3.TA2	1	1	0
Pin Osc		Capacitive sensing	X	0	1
P3.1/	1	P3.x (I/O)	I: 0; O: 1	0	0
TA1.0/		Timer1_A3.TA0	1	1	0
Pin Osc		Capacitive sensing	X	0	1
P3.2/	2	P3.x (I/O)	I: 0; O: 1	0	0
TA1.1/		Timer1_A3.TA1	1	1	0
Pin Osc		Capacitive sensing	X	0	1
P3.3/	3	P3.x (I/O)	I: 0; O: 1	0	0
TA1.2/		Timer1_A3.TA2	1	1	0
Pin Osc		Capacitive sensing	X	0	1
P3.4/	4	P3.x (I/O)	I: 0; O: 1	0	0
TA0.0/		Timer0_A3.TA0	1	1	0
Pin Osc		Capacitive sensing	X	0	1
P3.5/	5	P3.x (I/O)	I: 0; O: 1	0	0
TA0.1/		Timer0_A3.TA1	1	1	0
Pin Osc		Capacitive sensing	X	0	1
P3.6/	6	P3.x (I/O)	I: 0; O: 1	0	0
TA0.2/		Timer0_A3.TA2	1	1	0
Pin Osc		Capacitive sensing	X	0	1
P3.7/	7	P3.x (I/O)	I: 0; O: 1	0	0
TA1CLK/		Timer1_A3.TACLK	0	1	0
CAOUT/		Comparator output	1	1	0
Pin Osc		Capacitive sensing	X	0	1

(1) X = don't care

Copyright © 2011–2013, Texas Instruments Incorporated

REVISION HISTORY

REVISION	DESCRIPTION
SLAS735	Initial release
SLAS735A	Changed Control Bits / Signals column in Table 18 Changed Pin Name and Function columns in Table 23
SLAS735B	Changed Storage temperature range limit in Absolute Maximum Ratings Added BSL functions to P1.1 and P1.5 in Table 2. Added CAOUT information to Table 17.
SLAS735C	Changed T_{stg}, Programmed device, to -55°C to 150°C in Absolute Maximum Ratings. Changed TAG_ADC10_1 value to 0x10 in Table 10.
SLAS735D	Added AVCC (RHB package only, pin 29) to Table 2 Terminal Functions. Corrected typo in P3.7/TA1CLK/CAOUT description in Table 2. Corrected PW28 terminal assignment in Input and Output Pin Number columns in Table 13. Changed all port schematics (added buffer after PxOUT.y mux) in Port Schematics.
SLAS735E	Table 5 and Table 14, Corrected Timer_A register names.
SLAS735F	Added note on TC_{REF+} in 10-Bit ADC, Built-In Voltage Reference (MSP430G2x53 Only). Corrected signal names on Port P1 Pin Schematic: P1.4, Input/Output With Schmitt Trigger.
SLAS735G	Recommended Operating Conditions, Removed mention of USART module from f_{SYSTEM} description. Port P3 Pin Schematic: P3.0 to P3.7, Input/Output With Schmitt Trigger (28-Pin PW and 32-Pin RHB Packages Only), Added PW28 to available packages.
SLAS735H	Recommended Operating Conditions, Added test conditions for typical values. Pin-Oscillator Frequency – Ports Px, Corrected resistor value in note (1). POR, BOR, Added note (2).
SLAS735I	Throughout, Changed all variations of touch sense(1) to capacitive touch.
SLAS735J	Removed all information regarding MSP430G2113.

(1) TouchSense is a trademark of Immersion Corporation.

Copyright © 2011–2013, Texas Instruments Incorporated

PACKAGING INFORMATION

Orderable Device	Status (1)	Package Type	Package Drawing	Pins	Package Qty	Eco Plan (2)	Lead finish/ Ball material (6)	MSL Peak Temp (3)	Op Temp (°C)	Device Marking (4/5)	Samples
MSP430G2113IN20	ACTIVE	PDIP	N	20	20	RoHS & Green	NIPDAU	Level-1-260C-UNLIM	-40 to 85	M430G2113	Samples
MSP430G2153IN20	ACTIVE	PDIP	N	20	20	RoHS & Green	NIPDAU	Level-1-260C-UNLIM	-40 to 85	M430G2153	Samples
MSP430G2153IPW20	ACTIVE	TSSOP	PW	20	70	RoHS & Green	NIPDAU	Level-1-260C-UNLIM	-40 to 85	430G2153	Samples
MSP430G2153IPW20R	ACTIVE	TSSOP	PW	20	2000	RoHS & Green	NIPDAU	Level-1-260C-UNLIM	-40 to 85	430G2153	Samples
MSP430G2153IPW28	ACTIVE	TSSOP	PW	28	50	RoHS & Green	NIPDAU	Level-1-260C-UNLIM	-40 to 85	430G2153	Samples
MSP430G2153IPW28R	ACTIVE	TSSOP	PW	28	2000	RoHS & Green	NIPDAU	Level-1-260C-UNLIM	-40 to 85	430G2153	Samples
MSP430G2153IRHB32R	ACTIVE	VQFN	RHB	32	3000	RoHS & Green	NIPDAU	Level-2-260C-1 YEAR	-40 to 85	MSP430 G2153	Samples
MSP430G2153IRHB32T	ACTIVE	VQFN	RHB	32	250	RoHS & Green	NIPDAU	Level-2-260C-1 YEAR	-40 to 85	MSP430 G2153	Samples
MSP430G2213IN20	ACTIVE	PDIP	N	20	20	RoHS & Green	NIPDAU	Level-1-260C-UNLIM	-40 to 85	M430G2213	Samples
MSP430G2213IPW20	ACTIVE	TSSOP	PW	20	70	RoHS & Green	NIPDAU	Level-1-260C-UNLIM	-40 to 85	430G2213	Samples
MSP430G2213IPW20R	ACTIVE	TSSOP	PW	20	2000	RoHS & Green	NIPDAU	Level-1-260C-UNLIM	-40 to 85	430G2213	Samples
MSP430G2213IPW28	ACTIVE	TSSOP	PW	28	50	RoHS & Green	NIPDAU	Level-1-260C-UNLIM	-40 to 85	430G2213	Samples
MSP430G2213IRHB32R	ACTIVE	VQFN	RHB	32	3000	RoHS & Green	NIPDAU	Level-2-260C-1 YEAR	-40 to 85	MSP430 G2213	Samples
MSP430G2213IRHB32T	ACTIVE	VQFN	RHB	32	250	RoHS & Green	NIPDAU	Level-2-260C-1 YEAR	-40 to 85	MSP430 G2213	Samples
MSP430G2253IN20	ACTIVE	PDIP	N	20	20	RoHS & Green	NIPDAU	Level-1-260C-UNLIM	-40 to 85	M430G2253	Samples
MSP430G2253IPW20	ACTIVE	TSSOP	PW	20	70	RoHS & Green	NIPDAU	Level-1-260C-UNLIM	-40 to 85	430G2253	Samples
MSP430G2253IPW20R	ACTIVE	TSSOP	PW	20	2000	RoHS & Green	NIPDAU	Level-1-260C-UNLIM	-40 to 85	430G2253	Samples
MSP430G2253IPW28	ACTIVE	TSSOP	PW	28	50	RoHS & Green	NIPDAU	Level-1-260C-UNLIM	-40 to 85	430G2253	Samples
MSP430G2253IPW28R	ACTIVE	TSSOP	PW	28	2000	RoHS & Green	NIPDAU	Level-1-260C-UNLIM	-40 to 85	430G2253	Samples

Orderable Device	Status (1)	Package Type	Package Drawing	Pins	Package Qty	Eco Plan (2)	Lead finish/ Ball material (6)	MSL Peak Temp (3)	Op Temp (°C)	Device Marking (4/5)	Samples
MSP430G2253IRHB32R	ACTIVE	VQFN	RHB	32	3000	RoHS & Green	NIPDAU	Level-2-260C-1 YEAR	-40 to 85	MSP430 G2253	Samples
MSP430G2253IRHB32T	ACTIVE	VQFN	RHB	32	250	RoHS & Green	NIPDAU	Level-2-260C-1 YEAR	-40 to 85	MSP430 G2253	Samples
MSP430G2313IN20	ACTIVE	PDIP	N	20	20	RoHS & Green	NIPDAU	Level-1-260C-UNLIM	-40 to 85	M430G2313	Samples
MSP430G2313IPW20	ACTIVE	TSSOP	PW	20	70	RoHS & Green	NIPDAU	Level-1-260C-UNLIM	-40 to 85	430G2313	Samples
MSP430G2313IPW20R	ACTIVE	TSSOP	PW	20	2000	RoHS & Green	NIPDAU	Level-1-260C-UNLIM	-40 to 85	430G2313	Samples
MSP430G2313IPW28	ACTIVE	TSSOP	PW	28	50	RoHS & Green	NIPDAU	Level-1-260C-UNLIM	-40 to 85	430G2313	Samples
MSP430G2313IRHB32R	ACTIVE	VQFN	RHB	32	3000	RoHS & Green	NIPDAU	Level-2-260C-1 YEAR	-40 to 85	MSP430 G2313	Samples
MSP430G2313IRHB32T	ACTIVE	VQFN	RHB	32	250	RoHS & Green	NIPDAU	Level-2-260C-1 YEAR	-40 to 85	MSP430 G2313	Samples
MSP430G2353IN20	ACTIVE	PDIP	N	20	20	RoHS & Green	NIPDAU	Level-1-260C-UNLIM	-40 to 85	M430G2353	Samples
MSP430G2353IPW20	ACTIVE	TSSOP	PW	20	70	RoHS & Green	NIPDAU	Level-1-260C-UNLIM	-40 to 85	430G2353	Samples
MSP430G2353IPW20R	ACTIVE	TSSOP	PW	20	2000	RoHS & Green	NIPDAU	Level-1-260C-UNLIM	-40 to 85	430G2353	Samples
MSP430G2353IPW28	ACTIVE	TSSOP	PW	28	50	RoHS & Green	NIPDAU	Level-1-260C-UNLIM	-40 to 85	430G2353	Samples
MSP430G2353IPW28R	ACTIVE	TSSOP	PW	28	2000	RoHS & Green	NIPDAU	Level-1-260C-UNLIM	-40 to 85	430G2353	Samples
MSP430G2353IRHB32R	ACTIVE	VQFN	RHB	32	3000	RoHS & Green	NIPDAU	Level-2-260C-1 YEAR	-40 to 85	MSP430 G2353	Samples
MSP430G2353IRHB32T	ACTIVE	VQFN	RHB	32	250	RoHS & Green	NIPDAU	Level-2-260C-1 YEAR	-40 to 85	MSP430 G2353	Samples
MSP430G2413IN20	ACTIVE	PDIP	N	20	20	RoHS & Green	NIPDAU	Level-1-260C-UNLIM	-40 to 85	M430G2413	Samples
MSP430G2413IPW20	ACTIVE	TSSOP	PW	20	70	RoHS & Green	NIPDAU	Level-1-260C-UNLIM	-40 to 85	430G2413	Samples
MSP430G2413IPW20R	ACTIVE	TSSOP	PW	20	2000	RoHS & Green	NIPDAU	Level-1-260C-UNLIM	-40 to 85	430G2413	Samples
MSP430G2413IPW28	ACTIVE	TSSOP	PW	28	50	RoHS & Green	NIPDAU	Level-1-260C-UNLIM	-40 to 85	430G2413	Samples
MSP430G2413IPW28R	ACTIVE	TSSOP	PW	28	2000	RoHS & Green	NIPDAU	Level-1-260C-UNLIM	-40 to 85	430G2413	Samples

Orderable Device	Status (1)	Package Type	Package Drawing	Pins	Package Qty	Eco Plan (2)	Lead finish/ Ball material (6)	MSL Peak Temp (3)	Op Temp (°C)	Device Marking (4/5)	Samples
MSP430G2413IRHB32R	ACTIVE	VQFN	RHB	32	3000	RoHS & Green	NIPDAU	Level-2-260C-1 YEAR	-40 to 85	MSP430 G2413	Samples
MSP430G2413IRHB32T	ACTIVE	VQFN	RHB	32	250	RoHS & Green	NIPDAU	Level-2-260C-1 YEAR	-40 to 85	MSP430 G2413	Samples
MSP430G2453IN20	ACTIVE	PDIP	N	20	20	RoHS & Green	NIPDAU	Level-1-260C-UNLIM	-40 to 85	M430G2453	Samples
MSP430G2453IPW20	ACTIVE	TSSOP	PW	20	70	RoHS & Green	NIPDAU	Level-1-260C-UNLIM	-40 to 85	430G2453	Samples
MSP430G2453IPW20R	ACTIVE	TSSOP	PW	20	2000	RoHS & Green	NIPDAU	Level-1-260C-UNLIM	-40 to 85	430G2453	Samples
MSP430G2453IPW28	ACTIVE	TSSOP	PW	28	50	RoHS & Green	NIPDAU	Level-1-260C-UNLIM	-40 to 85	430G2453	Samples
MSP430G2453IPW28R	ACTIVE	TSSOP	PW	28	2000	RoHS & Green	NIPDAU	Level-1-260C-UNLIM	-40 to 85	430G2453	Samples
MSP430G2453IRHB32R	ACTIVE	VQFN	RHB	32	3000	RoHS & Green	NIPDAU	Level-2-260C-1 YEAR	-40 to 85	MSP430 G2453	Samples
MSP430G2453IRHB32T	ACTIVE	VQFN	RHB	32	250	RoHS & Green	NIPDAU	Level-2-260C-1 YEAR	-40 to 85	MSP430 G2453	Samples
MSP430G2513IN20	ACTIVE	PDIP	N	20	20	RoHS & Green	NIPDAU	Level-1-260C-UNLIM	-40 to 85	M430G2513	Samples
MSP430G2513IPW20	ACTIVE	TSSOP	PW	20	70	RoHS & Green	NIPDAU	Level-1-260C-UNLIM	-40 to 85	430G2513	Samples
MSP430G2513IPW20R	ACTIVE	TSSOP	PW	20	2000	RoHS & Green	NIPDAU	Level-1-260C-UNLIM	-40 to 85	430G2513	Samples
MSP430G2513IPW28	ACTIVE	TSSOP	PW	28	50	RoHS & Green	NIPDAU	Level-1-260C-UNLIM	-40 to 85	430G2513	Samples
MSP430G2513IPW28R	ACTIVE	TSSOP	PW	28	2000	RoHS & Green	NIPDAU	Level-1-260C-UNLIM	-40 to 85	430G2513	Samples
MSP430G2513IRHB32R	ACTIVE	VQFN	RHB	32	3000	RoHS & Green	NIPDAU	Level-2-260C-1 YEAR	-40 to 85	MSP430 G2513	Samples
MSP430G2513IRHB32T	ACTIVE	VQFN	RHB	32	250	RoHS & Green	NIPDAU	Level-2-260C-1 YEAR	-40 to 85	MSP430 G2513	Samples
MSP430G2553IN20	ACTIVE	PDIP	N	20	20	RoHS & Green	NIPDAU	Level-1-260C-UNLIM	-40 to 85	M430G2553	Samples
MSP430G2553IPW20	ACTIVE	TSSOP	PW	20	70	RoHS & Green	NIPDAU	Level-1-260C-UNLIM	-40 to 85	430G2553	Samples
MSP430G2553IPW20R	ACTIVE	TSSOP	PW	20	2000	RoHS & Green	NIPDAU	Level-1-260C-UNLIM	-40 to 85	430G2553	Samples
MSP430G2553IPW28	ACTIVE	TSSOP	PW	28	50	RoHS & Green	NIPDAU	Level-1-260C-UNLIM	-40 to 85	430G2553	Samples

Orderable Device	Status (1)	Package Type	Package Drawing	Pins	Package Qty	Eco Plan (2)	Lead finish/ Ball material (6)	MSL Peak Temp (3)	Op Temp (°C)	Device Marking (4/5)	Samples
MSP430G2553IPW28R	ACTIVE	TSSOP	PW	28	2000	RoHS & Green	NIPDAU	Level-1-260C-UNLIM	-40 to 85	430G2553	Samples
MSP430G2553IRHB32R	ACTIVE	VQFN	RHB	32	3000	RoHS & Green	NIPDAU	Level-2-260C-1 YEAR	-40 to 85	MSP430 G2553	Samples
MSP430G2553IRHB32T	ACTIVE	VQFN	RHB	32	250	RoHS & Green	NIPDAU	Level-2-260C-1 YEAR	-40 to 85	MSP430 G2553	Samples

(1) The marketing status values are defined as follows:
ACTIVE: Product device recommended for new designs.
LIFEBUY: TI has announced that the device will be discontinued, and a lifetime-buy period is in effect.
NRND: Not recommended for new designs. Device is in production to support existing customers, but TI does not recommend using this part in a new design.
PREVIEW: Device has been announced but is not in production. Samples may or may not be available.
OBSOLETE: TI has discontinued the production of the device.

(2) **RoHS:** TI defines "RoHS" to mean semiconductor products that are compliant with the current EU RoHS requirements for all 10 RoHS substances, including the requirement that RoHS substance do not exceed 0.1% by weight in homogeneous materials. Where designed to be soldered at high temperatures, "RoHS" products are suitable for use in specified lead-free processes. TI may reference these types of products as "Pb-Free".
RoHS Exempt: TI defines "RoHS Exempt" to mean products that contain lead but are compliant with EU RoHS pursuant to a specific EU RoHS exemption.
Green: TI defines "Green" to mean the content of Chlorine (Cl) and Bromine (Br) based flame retardants meet JS709B low halogen requirements of <=1000ppm threshold. Antimony trioxide based flame retardants must also meet the <=1000ppm threshold requirement.

(3) MSL, Peak Temp. - The Moisture Sensitivity Level rating according to the JEDEC industry standard classifications, and peak solder temperature.

(4) There may be additional marking, which relates to the logo, the lot trace code information, or the environmental category on the device.

(5) Multiple Device Markings will be inside parentheses. Only one Device Marking contained in parentheses and separated by a "~" will appear on a device. If a line is indented then it is a continuation of the previous line and the two combined represent the entire Device Marking for that device.

(6) Lead finish/Ball material - Orderable Devices may have multiple material finish options. Finish options are separated by a vertical ruled line. Lead finish/Ball material values may wrap to two lines if the finish value exceeds the maximum column width.

Important Information and Disclaimer: The information provided on this page represents TI's knowledge and belief as of the date that it is provided. TI bases its knowledge and belief on information provided by third parties, and makes no representation or warranty as to the accuracy of such information. Efforts are underway to better integrate information from third parties. TI has taken and continues to take reasonable steps to provide representative and accurate information but may not have conducted destructive testing or chemical analysis on incoming materials and chemicals. TI and TI suppliers consider certain information to be proprietary, and thus CAS numbers and other limited information may not be available for release.

In no event shall TI's liability arising out of such information exceed the total purchase price of the TI part(s) at issue in this document sold by TI to Customer on an annual basis.

OTHER QUALIFIED VERSIONS OF MSP430G2453, MSP430G2553 :

- Automotive : MSP430G2453-Q1, MSP430G2553-Q1

NOTE: Qualified Version Definitions:

- Automotive - Q100 devices qualified for high-reliability automotive applications targeting zero defects

TAPE AND REEL INFORMATION

REEL DIMENSIONS

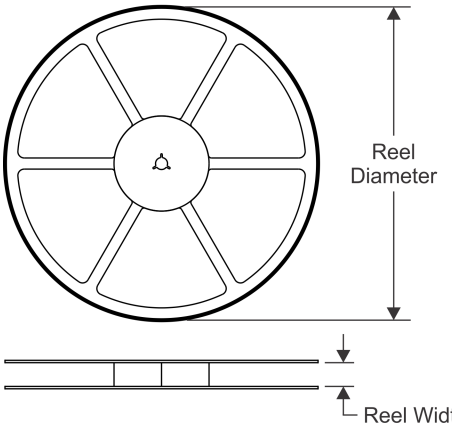

TAPE DIMENSIONS

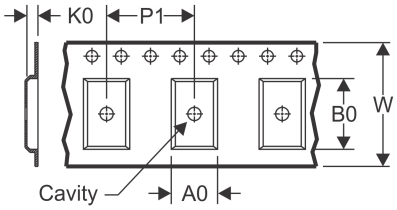

A0	Dimension designed to accommodate the component width
B0	Dimension designed to accommodate the component length
K0	Dimension designed to accommodate the component thickness
W	Overall width of the carrier tape
P1	Pitch between successive cavity centers

QUADRANT ASSIGNMENTS FOR PIN 1 ORIENTATION IN TAPE

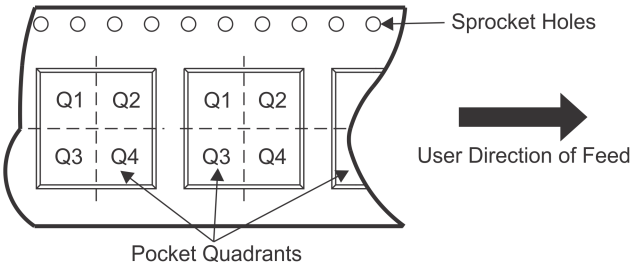

*All dimensions are nominal

Device	Package Type	Package Drawing	Pins	SPQ	Reel Diameter (mm)	Reel Width W1 (mm)	A0 (mm)	B0 (mm)	K0 (mm)	P1 (mm)	W (mm)	Pin1 Quadrant
MSP430G2153IPW20R	TSSOP	PW	20	2000	330.0	16.4	6.95	7.1	1.6	8.0	16.0	Q1
MSP430G2153IPW28R	TSSOP	PW	28	2000	330.0	16.4	6.9	10.2	1.8	12.0	16.0	Q1
MSP430G2153IRHB32R	VQFN	RHB	32	3000	330.0	12.4	5.3	5.3	1.1	8.0	12.0	Q2
MSP430G2153IRHB32T	VQFN	RHB	32	250	180.0	12.4	5.3	5.3	1.1	8.0	12.0	Q2
MSP430G2213IPW20R	TSSOP	PW	20	2000	330.0	16.4	6.95	7.0	1.4	8.0	16.0	Q1
MSP430G2213IRHB32R	VQFN	RHB	32	3000	330.0	12.4	5.3	5.3	1.1	8.0	12.0	Q2
MSP430G2213IRHB32T	VQFN	RHB	32	250	180.0	12.4	5.3	5.3	1.1	8.0	12.0	Q2
MSP430G2253IPW20R	TSSOP	PW	20	2000	330.0	16.4	6.95	7.1	1.6	8.0	16.0	Q1
MSP430G2253IPW28R	TSSOP	PW	28	2000	330.0	16.4	6.9	10.2	1.8	12.0	16.0	Q1
MSP430G2253IRHB32R	VQFN	RHB	32	3000	330.0	12.4	5.3	5.3	1.1	8.0	12.0	Q2
MSP430G2253IRHB32T	VQFN	RHB	32	250	180.0	12.4	5.3	5.3	1.1	8.0	12.0	Q2
MSP430G2313IPW20R	TSSOP	PW	20	2000	330.0	16.4	6.95	7.1	1.6	8.0	16.0	Q1
MSP430G2313IRHB32R	VQFN	RHB	32	3000	330.0	12.4	5.3	5.3	1.1	8.0	12.0	Q2
MSP430G2313IRHB32T	VQFN	RHB	32	250	180.0	12.4	5.3	5.3	1.1	8.0	12.0	Q2
MSP430G2353IPW20R	TSSOP	PW	20	2000	330.0	16.4	6.95	7.1	1.6	8.0	16.0	Q1
MSP430G2353IPW28R	TSSOP	PW	28	2000	330.0	16.4	6.9	10.2	1.8	12.0	16.0	Q1
MSP430G2353IRHB32R	VQFN	RHB	32	3000	330.0	12.4	5.3	5.3	1.1	8.0	12.0	Q2
MSP430G2353IRHB32T	VQFN	RHB	32	250	180.0	12.4	5.3	5.3	1.1	8.0	12.0	Q2

Device	Package Type	Package Drawing	Pins	SPQ	Reel Diameter (mm)	Reel Width W1 (mm)	A0 (mm)	B0 (mm)	K0 (mm)	P1 (mm)	W (mm)	Pin1 Quadrant
MSP430G2413IPW20R	TSSOP	PW	20	2000	330.0	16.4	6.95	7.1	1.6	8.0	16.0	Q1
MSP430G2413IPW28R	TSSOP	PW	28	2000	330.0	16.4	6.9	10.2	1.8	12.0	16.0	Q1
MSP430G2413IRHB32R	VQFN	RHB	32	3000	330.0	12.4	5.3	5.3	1.1	8.0	12.0	Q2
MSP430G2413IRHB32T	VQFN	RHB	32	250	180.0	12.4	5.3	5.3	1.1	8.0	12.0	Q2
MSP430G2453IPW20R	TSSOP	PW	20	2000	330.0	16.4	6.95	7.1	1.6	8.0	16.0	Q1
MSP430G2453IPW28R	TSSOP	PW	28	2000	330.0	16.4	6.9	10.2	1.8	12.0	16.0	Q1
MSP430G2453IRHB32R	VQFN	RHB	32	3000	330.0	12.4	5.3	5.3	1.1	8.0	12.0	Q2
MSP430G2453IRHB32T	VQFN	RHB	32	250	180.0	12.4	5.3	5.3	1.1	8.0	12.0	Q2
MSP430G2513IPW20R	TSSOP	PW	20	2000	330.0	16.4	6.95	7.1	1.6	8.0	16.0	Q1
MSP430G2513IPW28R	TSSOP	PW	28	2000	330.0	16.4	6.9	10.2	1.8	12.0	16.0	Q1
MSP430G2513IRHB32R	VQFN	RHB	32	3000	330.0	12.4	5.3	5.3	1.1	8.0	12.0	Q2
MSP430G2513IRHB32T	VQFN	RHB	32	250	180.0	12.4	5.3	5.3	1.1	8.0	12.0	Q2
MSP430G2553IPW20R	TSSOP	PW	20	2000	330.0	16.4	6.95	7.0	1.4	8.0	16.0	Q1
MSP430G2553IPW28R	TSSOP	PW	28	2000	330.0	16.4	6.9	10.2	1.8	12.0	16.0	Q1
MSP430G2553IRHB32R	VQFN	RHB	32	3000	330.0	12.4	5.3	5.3	1.1	8.0	12.0	Q2
MSP430G2553IRHB32T	VQFN	RHB	32	250	180.0	12.4	5.3	5.3	1.1	8.0	12.0	Q2

TAPE AND REEL BOX DIMENSIONS

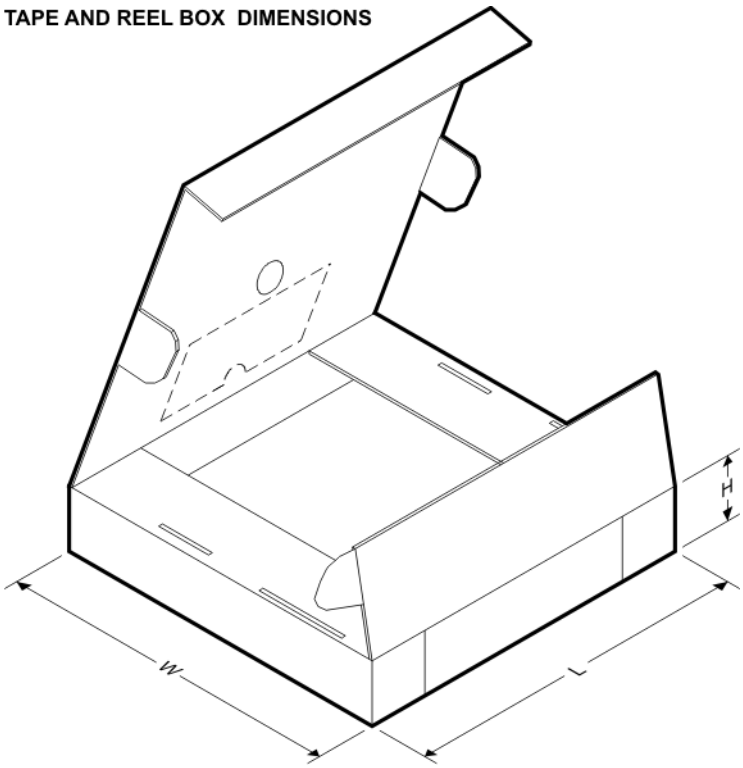

*All dimensions are nominal

Device	Package Type	Package Drawing	Pins	SPQ	Length (mm)	Width (mm)	Height (mm)
MSP430G2153IPW20R	TSSOP	PW	20	2000	853.0	449.0	35.0

Device	Package Type	Package Drawing	Pins	SPQ	Length (mm)	Width (mm)	Height (mm)
MSP430G2153IPW28R	TSSOP	PW	28	2000	853.0	449.0	35.0
MSP430G2153IRHB32R	VQFN	RHB	32	3000	367.0	367.0	35.0
MSP430G2153IRHB32T	VQFN	RHB	32	250	210.0	185.0	35.0
MSP430G2213IPW20R	TSSOP	PW	20	2000	853.0	449.0	35.0
MSP430G2213IRHB32R	VQFN	RHB	32	3000	367.0	367.0	35.0
MSP430G2213IRHB32T	VQFN	RHB	32	250	210.0	185.0	35.0
MSP430G2253IPW20R	TSSOP	PW	20	2000	853.0	449.0	35.0
MSP430G2253IPW28R	TSSOP	PW	28	2000	853.0	449.0	35.0
MSP430G2253IRHB32R	VQFN	RHB	32	3000	367.0	367.0	35.0
MSP430G2253IRHB32T	VQFN	RHB	32	250	210.0	185.0	35.0
MSP430G2313IPW20R	TSSOP	PW	20	2000	853.0	449.0	35.0
MSP430G2313IRHB32R	VQFN	RHB	32	3000	367.0	367.0	35.0
MSP430G2313IRHB32T	VQFN	RHB	32	250	210.0	185.0	35.0
MSP430G2353IPW20R	TSSOP	PW	20	2000	853.0	449.0	35.0
MSP430G2353IPW28R	TSSOP	PW	28	2000	853.0	449.0	35.0
MSP430G2353IRHB32R	VQFN	RHB	32	3000	367.0	367.0	35.0
MSP430G2353IRHB32T	VQFN	RHB	32	250	210.0	185.0	35.0
MSP430G2413IPW20R	TSSOP	PW	20	2000	853.0	449.0	35.0
MSP430G2413IPW28R	TSSOP	PW	28	2000	853.0	449.0	35.0
MSP430G2413IRHB32R	VQFN	RHB	32	3000	367.0	367.0	35.0
MSP430G2413IRHB32T	VQFN	RHB	32	250	210.0	185.0	35.0
MSP430G2453IPW20R	TSSOP	PW	20	2000	853.0	449.0	35.0
MSP430G2453IPW28R	TSSOP	PW	28	2000	853.0	449.0	35.0
MSP430G2453IRHB32R	VQFN	RHB	32	3000	367.0	367.0	35.0
MSP430G2453IRHB32T	VQFN	RHB	32	250	210.0	185.0	35.0
MSP430G2513IPW20R	TSSOP	PW	20	2000	853.0	449.0	35.0
MSP430G2513IPW28R	TSSOP	PW	28	2000	853.0	449.0	35.0
MSP430G2513IRHB32R	VQFN	RHB	32	3000	367.0	367.0	35.0
MSP430G2513IRHB32T	VQFN	RHB	32	250	210.0	185.0	35.0
MSP430G2553IPW20R	TSSOP	PW	20	2000	853.0	449.0	35.0
MSP430G2553IPW28R	TSSOP	PW	28	2000	853.0	449.0	35.0
MSP430G2553IRHB32R	VQFN	RHB	32	3000	367.0	367.0	35.0
MSP430G2553IRHB32T	VQFN	RHB	32	250	210.0	185.0	35.0

N (R–PDIP–T**) PLASTIC DUAL–IN–LINE PACKAGE

16 PINS SHOWN

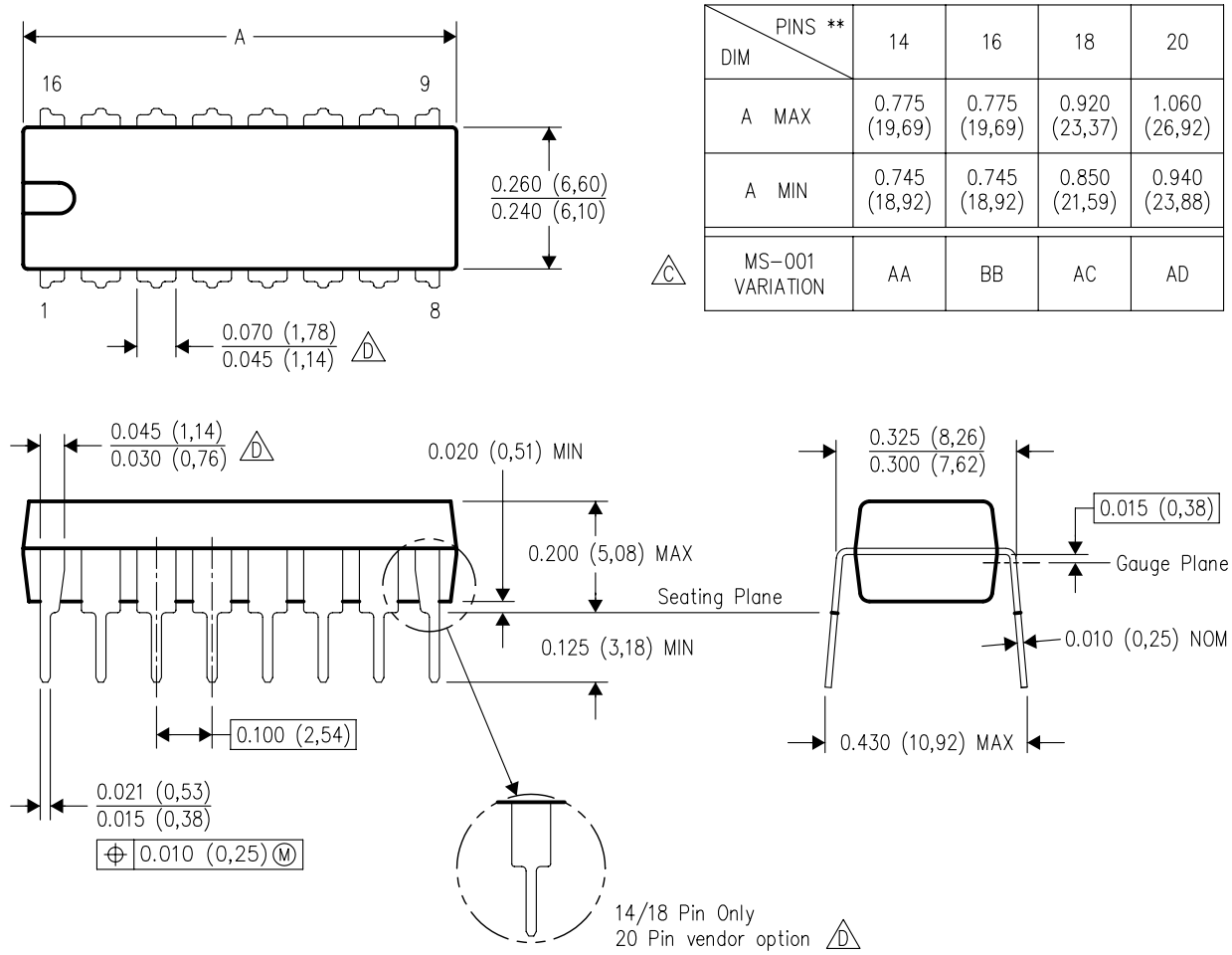

DIM \ PINS **	14	16	18	20
A MAX	0.775 (19,69)	0.775 (19,69)	0.920 (23,37)	1.060 (26,92)
A MIN	0.745 (18,92)	0.745 (18,92)	0.850 (21,59)	0.940 (23,88)
MS–001 VARIATION (C)	AA	BB	AC	AD

NOTES:
A. All linear dimensions are in inches (millimeters).
B. This drawing is subject to change without notice.
C. Falls within JEDEC MS–001, except 18 and 20 pin minimum body length (Dim A).
D. The 20 pin end lead shoulder width is a vendor option, either half or full width.

PW (R-PDSO-G28) PLASTIC SMALL OUTLINE

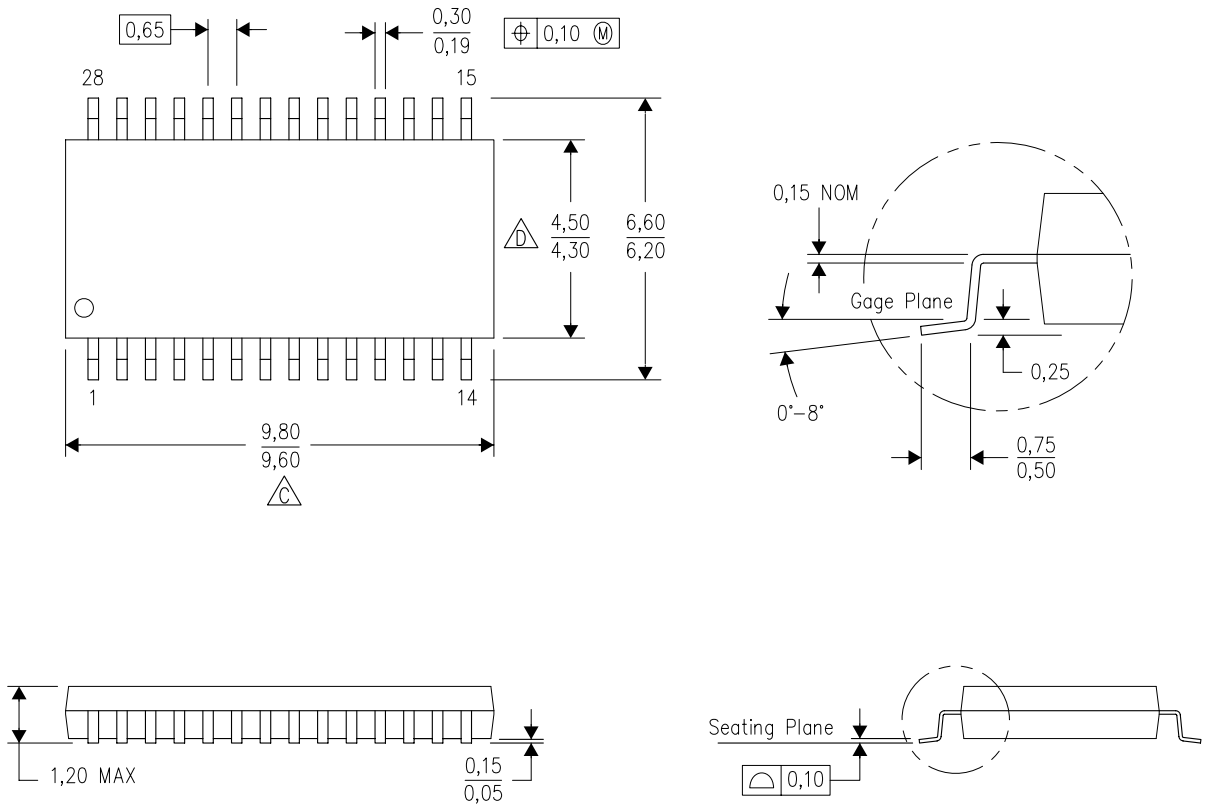

NOTES:
A. All linear dimensions are in millimeters. Dimensioning and tolerancing per ASME Y14.5M–1994.
B. This drawing is subject to change without notice.
C. Body length does not include mold flash, protrusions, or gate burrs. Mold flash, protrusions, or gate burrs shall not exceed 0,15 each side.
D. Body width does not include interlead flash. Interlead flash shall not exceed 0,25 each side.
E. Falls within JEDEC MO-153

PW (R–PDSO–G28) PLASTIC SMALL OUTLINE

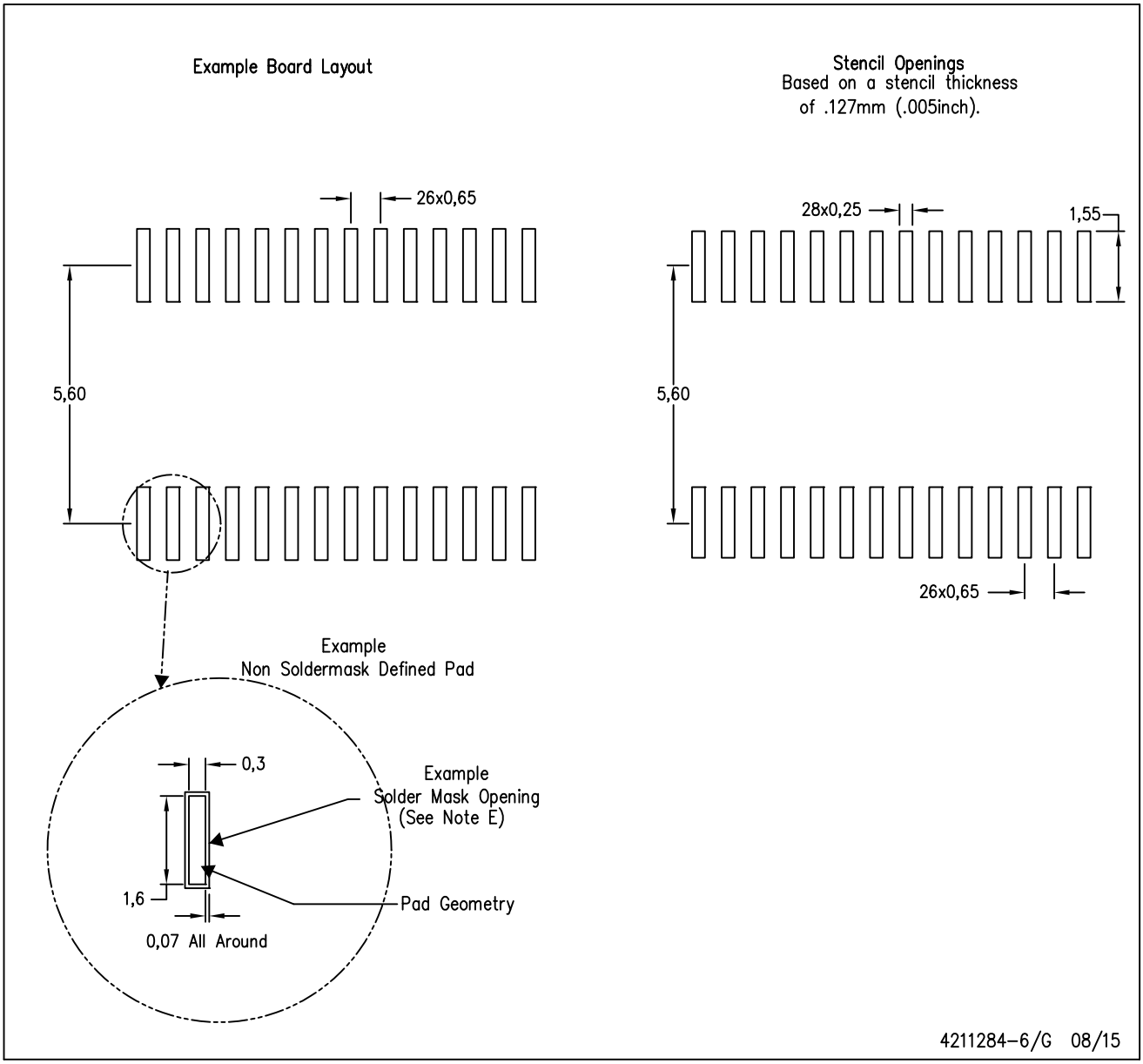

NOTES:
A. All linear dimensions are in millimeters.
B. This drawing is subject to change without notice.
C. Publication IPC–7351 is recommended for alternate design.
D. Laser cutting apertures with trapezoidal walls and also rounding corners will offer better paste release. Customers should contact their board assembly site for stencil design recommendations. Refer to IPC–7525 for other stencil recommendations.
E. Customers should contact their board fabrication site for solder mask tolerances between and around signal pads.

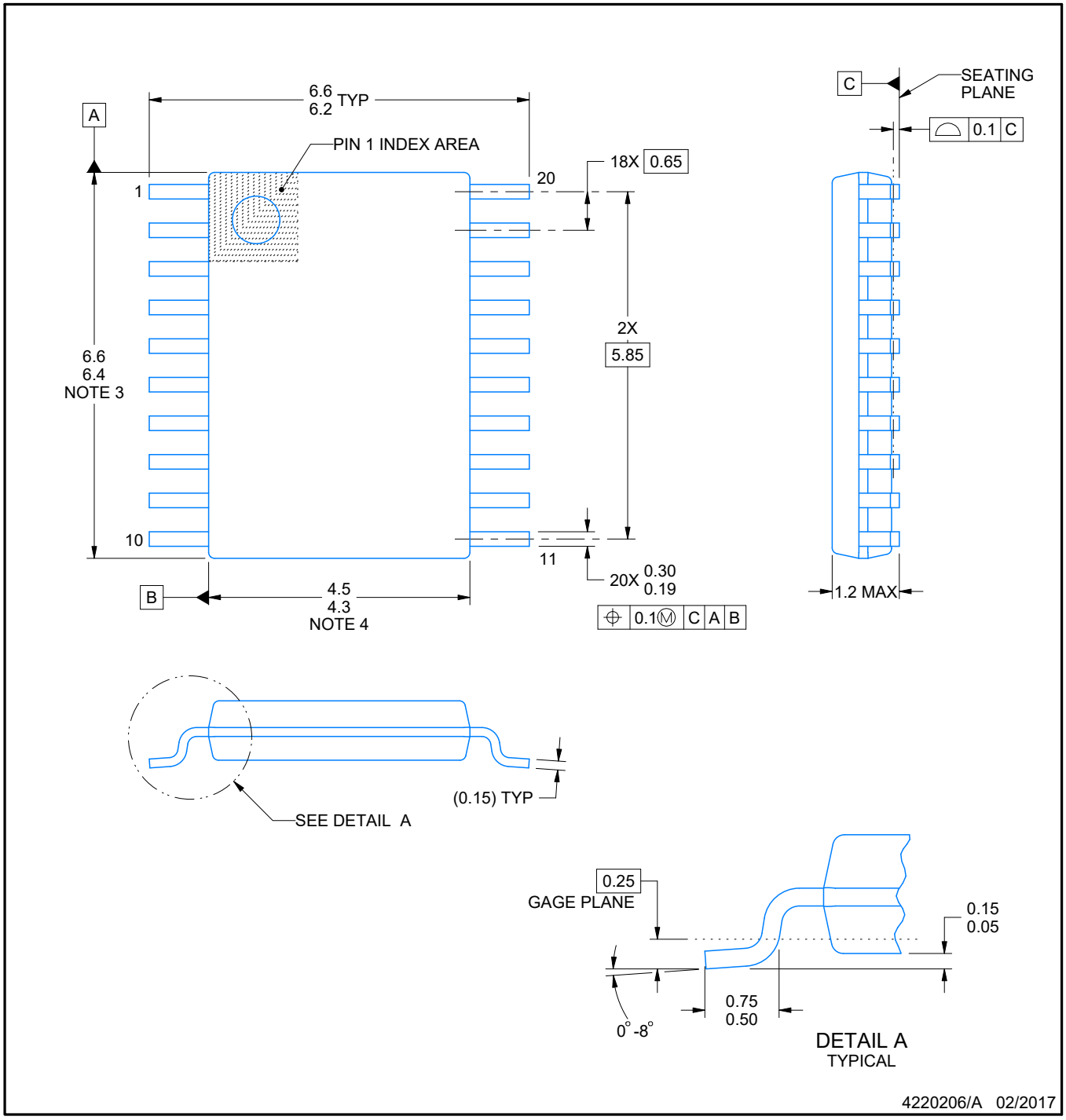

NOTES:

1. All linear dimensions are in millimeters. Any dimensions in parenthesis are for reference only. Dimensioning and tolerancing per ASME Y14.5M.
2. This drawing is subject to change without notice.
3. This dimension does not include mold flash, protrusions, or gate burrs. Mold flash, protrusions, or gate burrs shall not exceed 0.15 mm per side.
4. This dimension does not include interlead flash. Interlead flash shall not exceed 0.25 mm per side.
5. Reference JEDEC registration MO-153.

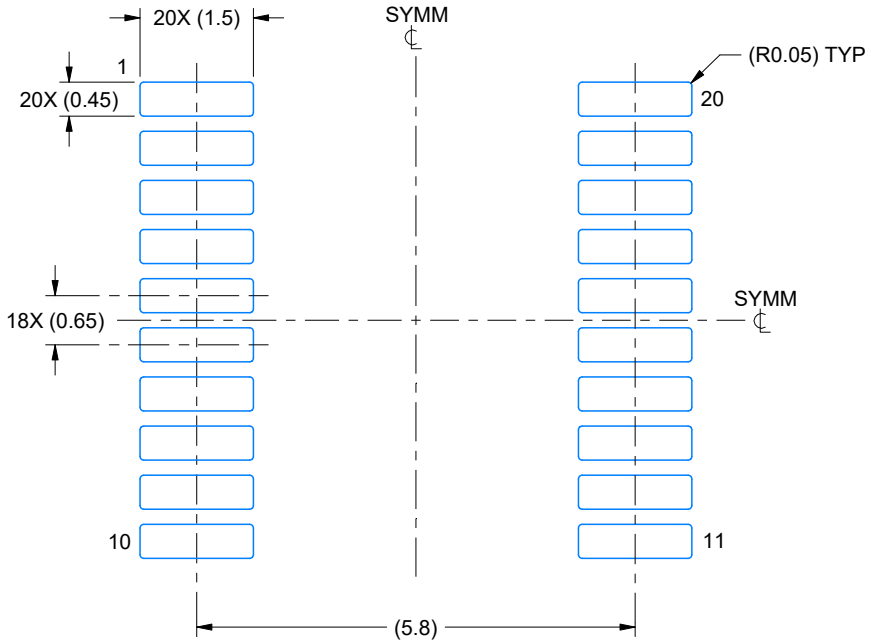

LAND PATTERN EXAMPLE
EXPOSED METAL SHOWN
SCALE: 10X

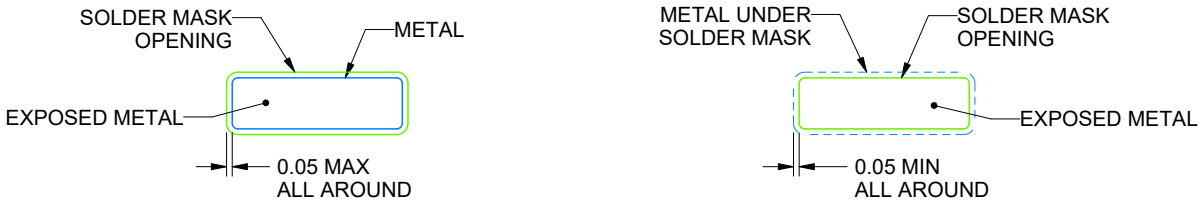

NON-SOLDER MASK DEFINED (PREFERRED)

SOLDER MASK DEFINED

SOLDER MASK DETAILS

4220206/A 02/2017

NOTES: (continued)

6. Publication IPC-7351 may have alternate designs.
7. Solder mask tolerances between and around signal pads can vary based on board fabrication site.

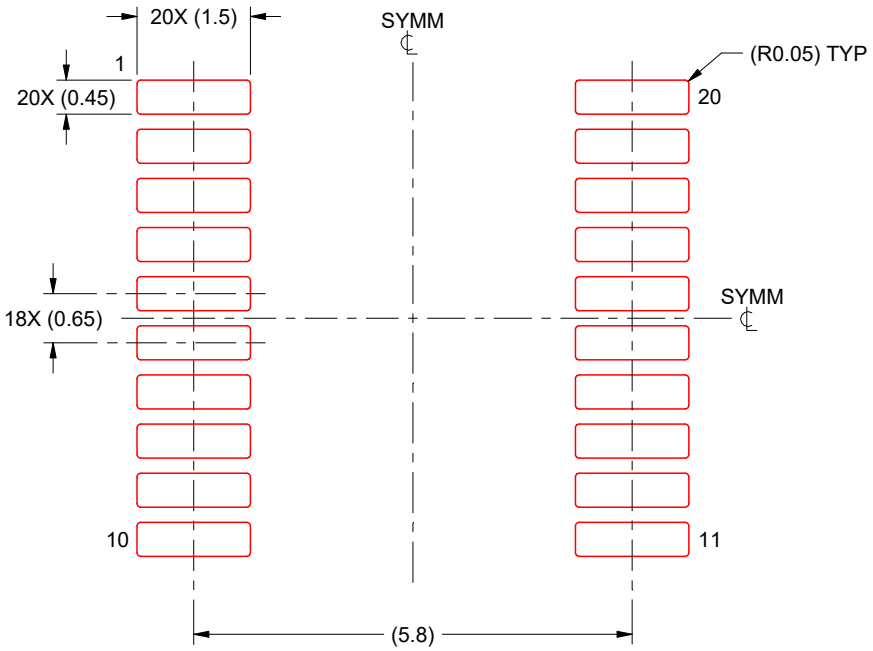

SOLDER PASTE EXAMPLE
BASED ON 0.125 mm THICK STENCIL
SCALE: 10X

4220206/A 02/2017

NOTES: (continued)

8. Laser cutting apertures with trapezoidal walls and rounded corners may offer better paste release. IPC-7525 may have alternate design recommendations.
9. Board assembly site may have different recommendations for stencil design.

PW (R–PDSO–G20) PLASTIC SMALL OUTLINE

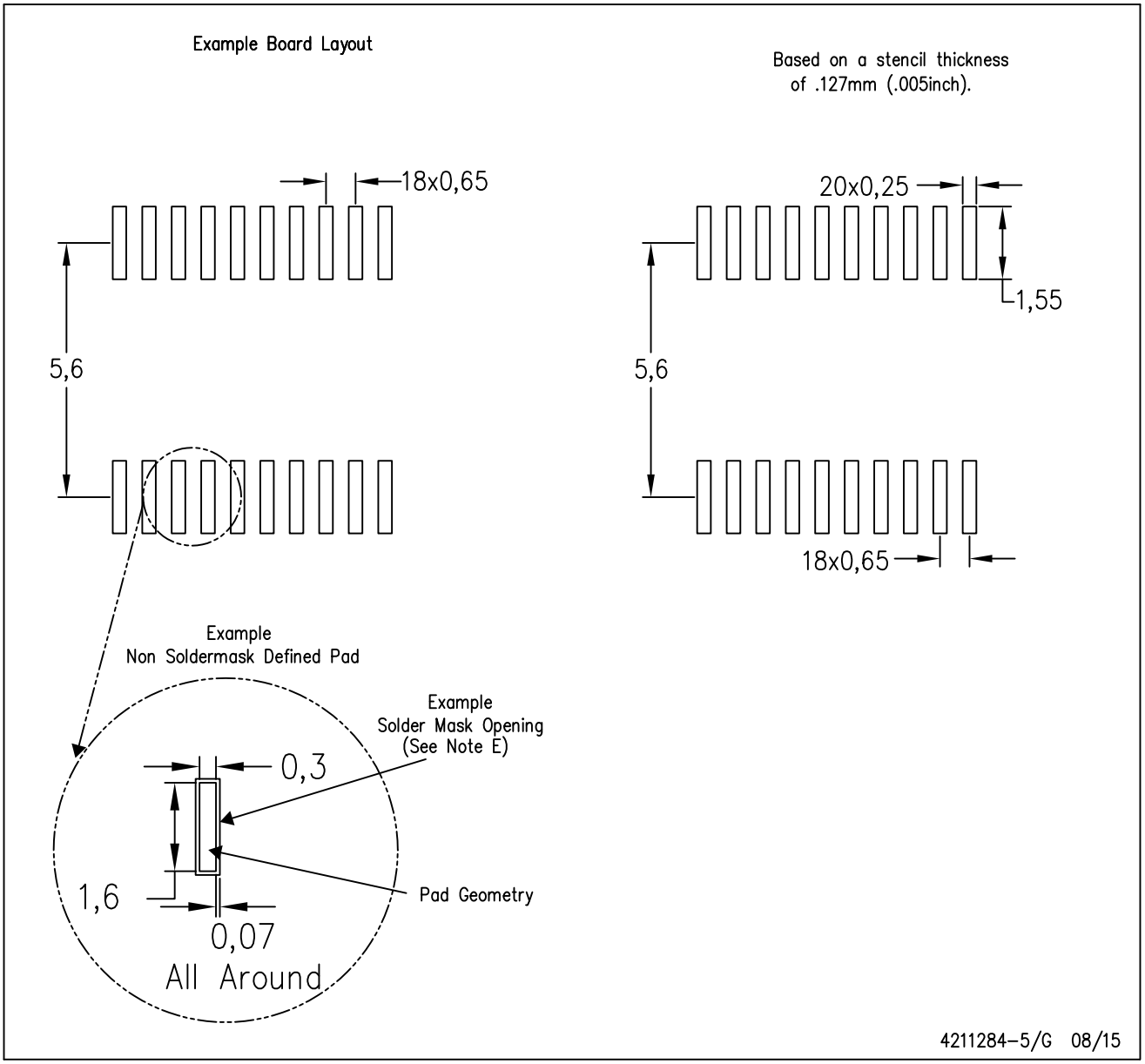

NOTES:
A. All linear dimensions are in millimeters.
B. This drawing is subject to change without notice.
C. Publication IPC–7351 is recommended for alternate design.
D. Laser cutting apertures with trapezoidal walls and also rounding corners will offer better paste release. Customers should contact their board assembly site for stencil design recommendations. Refer to IPC–7525 for other stencil recommendations.
E. Customers should contact their board fabrication site for solder mask tolerances between and around signal pads.

GENERIC PACKAGE VIEW

RHB 32

VQFN - 1 mm max height

5 x 5, 0.5 mm pitch

PLASTIC QUAD FLATPACK - NO LEAD

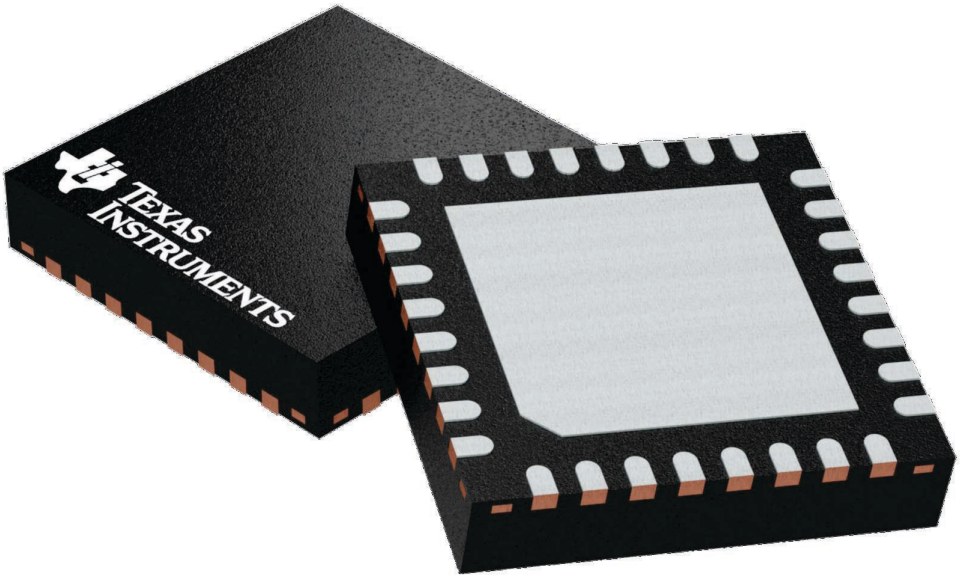

Images above are just a representation of the package family, actual package may vary.
Refer to the product data sheet for package details.

4224745/A

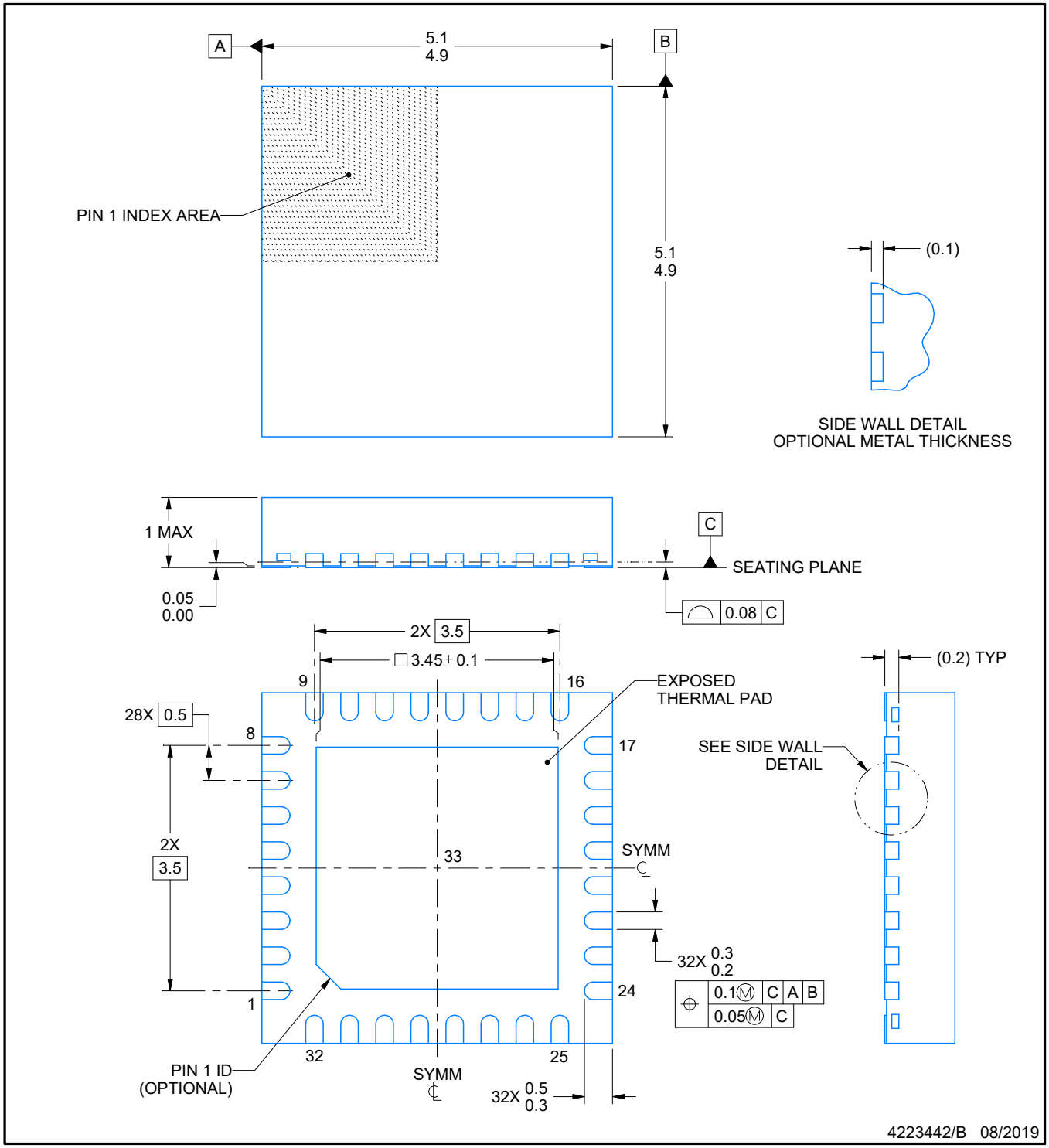

NOTES:

1. All linear dimensions are in millimeters. Any dimensions in parenthesis are for reference only. Dimensioning and tolerancing per ASME Y14.5M.
2. This drawing is subject to change without notice.
3. The package thermal pad must be soldered to the printed circuit board for thermal and mechanical performance.

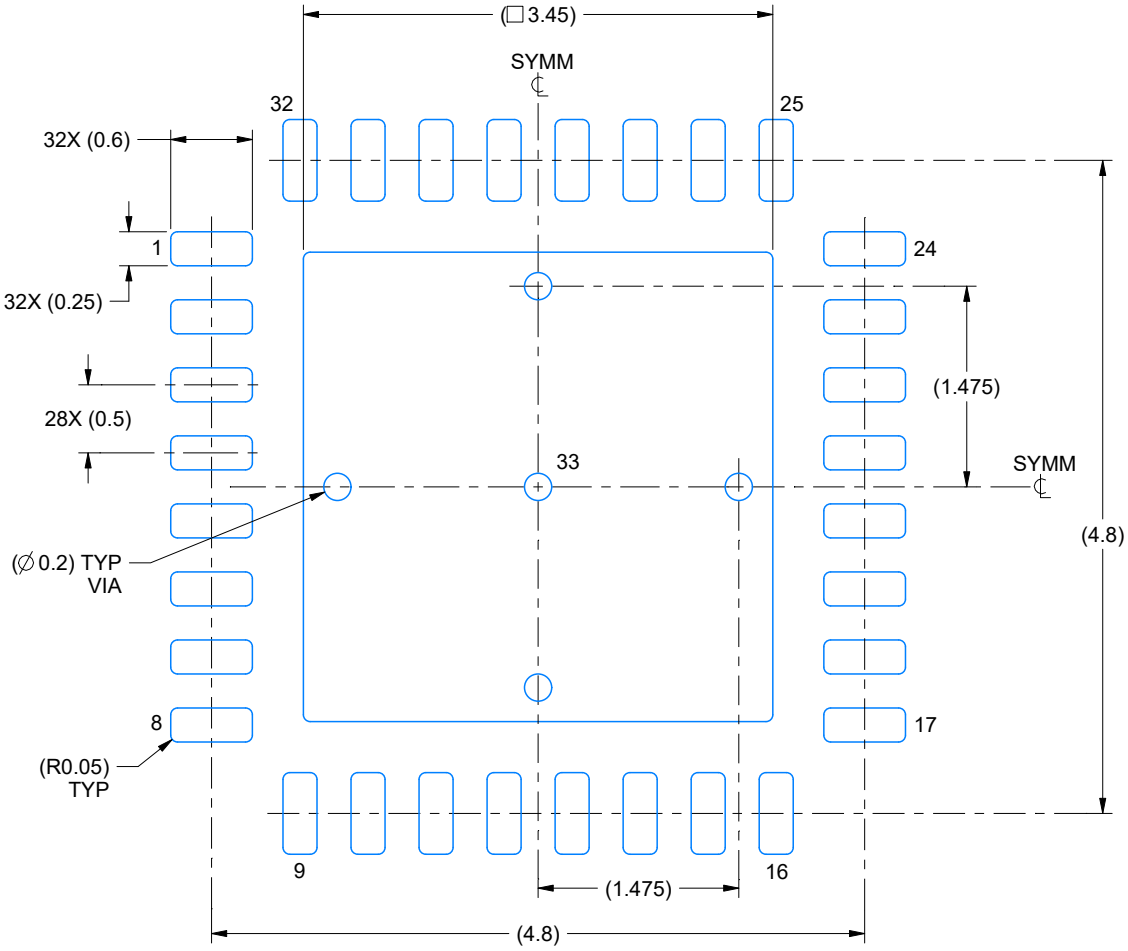

LAND PATTERN EXAMPLE
SCALE:18X

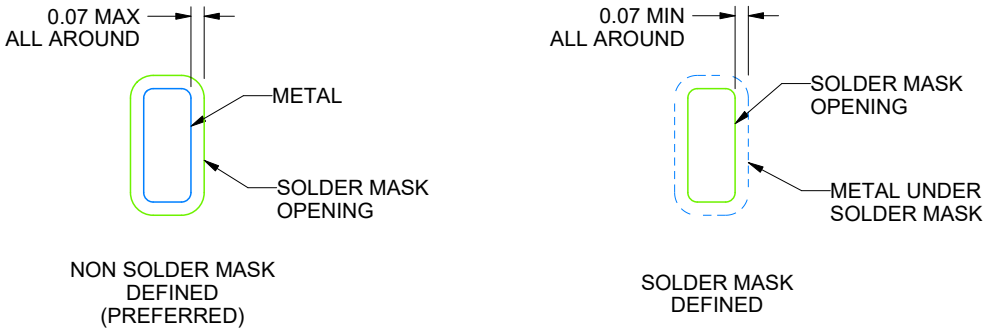

SOLDER MASK DETAILS

4223442/B 08/2019

NOTES: (continued)

4. This package is designed to be soldered to a thermal pad on the board. For more information, see Texas Instruments literature number SLUA271 (www.ti.com/lit/slua271).
5. Vias are optional depending on application, refer to device data sheet. If any vias are implemented, refer to their locations shown on this view. It is recommended that vias under paste be filled, plugged or tented.

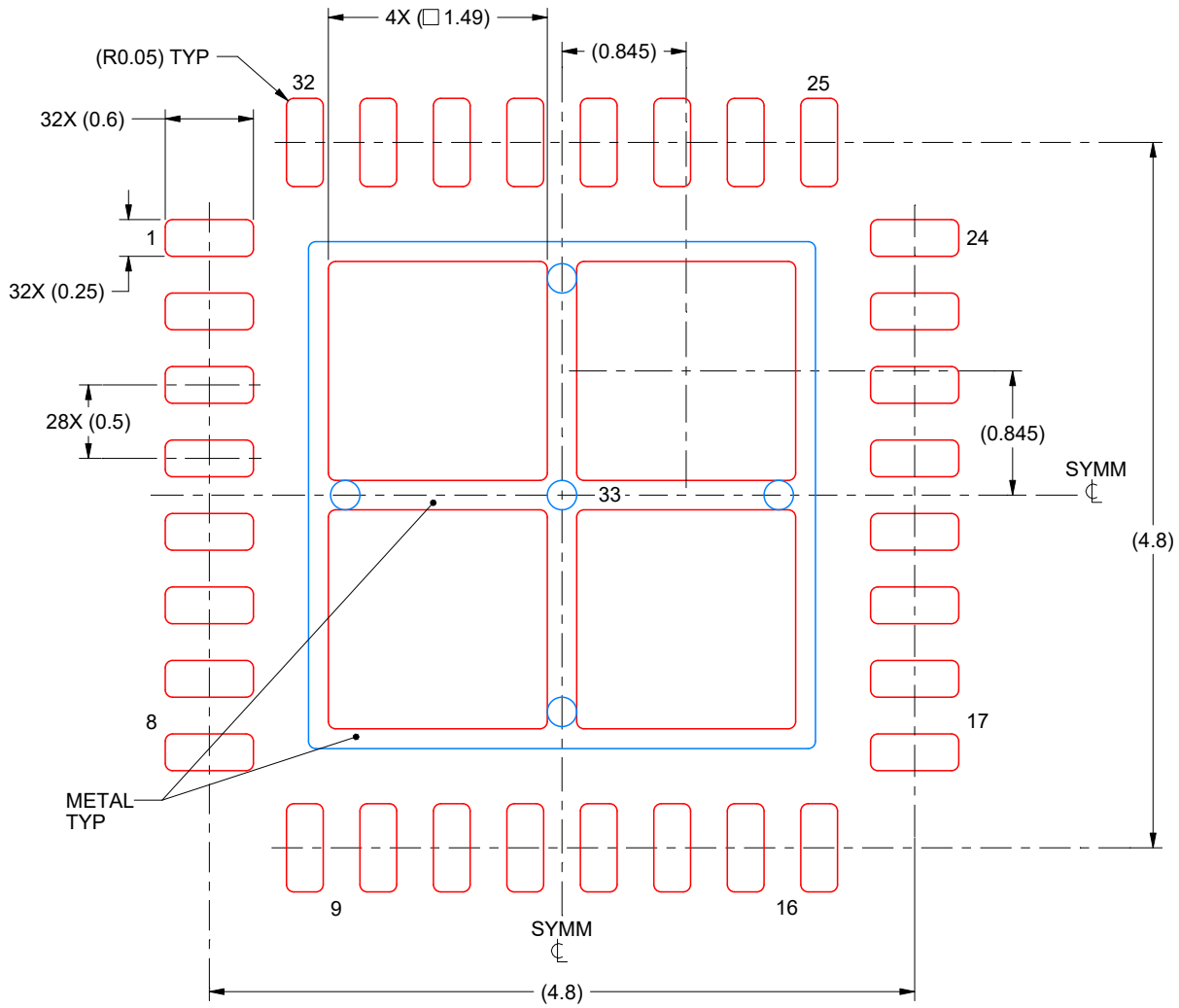

SOLDER PASTE EXAMPLE
BASED ON 0.125 mm THICK STENCIL

EXPOSED PAD 33:
75% PRINTED SOLDER COVERAGE BY AREA UNDER PACKAGE
SCALE:20X

4223442/B 08/2019

NOTES: (continued)

6. Laser cutting apertures with trapezoidal walls and rounded corners may offer better paste release. IPC-7525 may have alternate design recommendations.

IMPORTANT NOTICE AND DISCLAIMER

TI PROVIDES TECHNICAL AND RELIABILITY DATA (INCLUDING DATA SHEETS), DESIGN RESOURCES (INCLUDING REFERENCE DESIGNS), APPLICATION OR OTHER DESIGN ADVICE, WEB TOOLS, SAFETY INFORMATION, AND OTHER RESOURCES “AS IS” AND WITH ALL FAULTS, AND DISCLAIMS ALL WARRANTIES, EXPRESS AND IMPLIED, INCLUDING WITHOUT LIMITATION ANY IMPLIED WARRANTIES OF MERCHANTABILITY, FITNESS FOR A PARTICULAR PURPOSE OR NON-INFRINGEMENT OF THIRD PARTY INTELLECTUAL PROPERTY RIGHTS.

These resources are intended for skilled developers designing with TI products. You are solely responsible for (1) selecting the appropriate TI products for your application, (2) designing, validating and testing your application, and (3) ensuring your application meets applicable standards, and any other safety, security, regulatory or other requirements.

These resources are subject to change without notice. TI grants you permission to use these resources only for development of an application that uses the TI products described in the resource. Other reproduction and display of these resources is prohibited. No license is granted to any other TI intellectual property right or to any third party intellectual property right. TI disclaims responsibility for, and you will fully indemnify TI and its representatives against, any claims, damages, costs, losses, and liabilities arising out of your use of these resources.

TI’s products are provided subject to TI’s Terms of Sale or other applicable terms available either on ti.com or provided in conjunction with such TI products. TI’s provision of these resources does not expand or otherwise alter TI’s applicable warranties or warranty disclaimers for TI products.

TI objects to and rejects any additional or different terms you may have proposed.

Mailing Address: Texas Instruments, Post Office Box 655303, Dallas, Texas 75265
Copyright © 2021, Texas Instruments Incorporated

ESP-01 802.11 b/g/n Wi-Fi Module

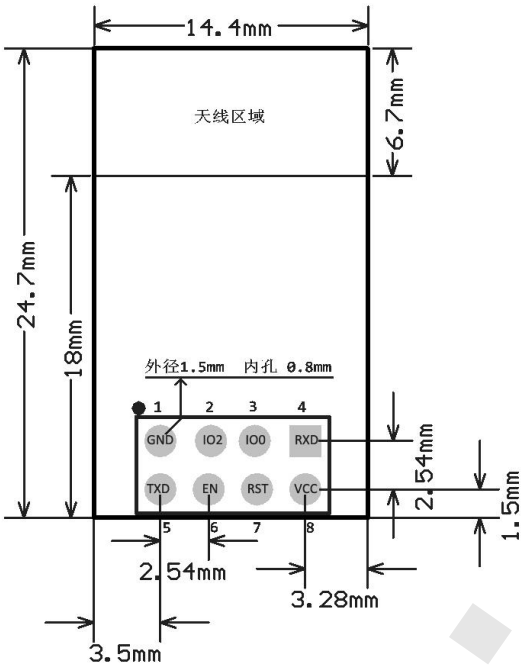

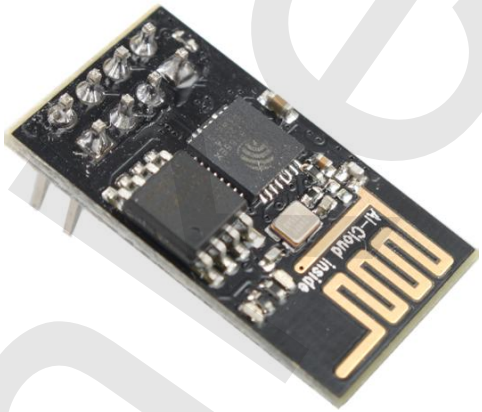

Features

- The smallest 802.11b/g/n Wi-Fi SOC module
- Low power 32-bit CPU, can also serve as the application processor
- Up to 160MHz clock speed
- Supports UART/GPIO
- DIP-8 package for easy welding
- Integrated Wi-Fi MAC/BB/RF/PA/LNA
- Deep sleep current as low as 20uA
- Embedded lwIP protocol stack
- Supports STA/AP/STA + AP operation mode
- Support Smart Config/AirKiss technology
- UART baudrate up to 4Mbps
- General AT commands can be used quickly
- Supports remote firmware upgrade (FOTA)

Overview

ESP-01 has a highly competitive package size and ultra-low power technology.

ESP-01 can be widely used in a variety of networking, for home automation, industrial wireless control, baby monitors, wearable electronic products, wireless location sensing devices, wireless positioning system signals and other networking applications.

ESP-01 in DIP package, unique plug-in package design, it can be flexible access to existing products, especially for automation, large-scale, low-cost modern production methods, easy to apply to a variety of things networking hardware terminal occasions.

Copyright © 2017 Shenzhen Ai-Thinker Technology Co., Ltd All Rights Reserved

Product Specifications

Module Model	ESP-01
Package	DIP-8
Size	24.7*14.4*11.0（±0.2）mm
SPI Flash	Default 8Mbit
Interface	UART/GPIO
IO Port	2
UART Baudrate	Support 300 ~ 4608000 bps， Default 115200 bps
Frequency Range	2412 ~ 2484MHz
Antenna	PCB antenna, 2 dBi
Secondary Development	Support
Transmit Power	802.11b: 16±2 dBm (@11Mbps) 802.11g: 14±2 dBm (@54Mbps) 802.11n: 13±2 dBm (@HT20, MCS7)
Receiving Sensitivity	CCK, 1 Mbps : -90dBm CCK, 11 Mbps: -85dBm 6 Mbps (1/2 BPSK): -88dBm 54 Mbps (3/4 64-QAM): -70dBm HT20, MCS7 (65 Mbps, 72.2 Mbps): -67dBm
Power (Typical Values)	Continuous Transmission => Average: ~ 71mA, Peak: 300mA Modem Sleep: ~20mA Light Sleep: ~2mA Deep Sleep: ~0.02mA
Security	WEP/WPA-PSK/WPA2-PSK
Power Supply	Voltage 3.0V ~ 3.6V， Current >300mA
Operating Temperature	-20 ℃ ~ 85 ℃
Storage Environment	-40 ℃ ~ 90 ℃ , < 90%RH
Weight	0.65g

Contact US

Shenzhen Ai-Thinker Technology Co., Ltd
Address: 6/F, Block C2, Huafeng Industrial Park, Hangcheng Road, Bao'an Road, Baoan District, Shenzhen ,China
Website: www.ai-thinker.com Tel: 0755-29162996 E-mail: support@aithinker.com

Copyright © 2017 Shenzhen Ai-Thinker Technology Co., Ltd All Rights Reserved

Datasheet SHT3x-DIS

Humidity and Temperature Sensor

- Fully calibrated, linearized, and temperature compensated digital output
- Wide supply voltage range, from 2.15 V to 5.5 V
- I2C Interface with communication speeds up to 1 MHz and two user selectable addresses
- Typical accuracy of ± 1.5 %RH and ± 0.1 °C for SHT35
- Very fast start-up and measurement time
- Tiny 8-Pin DFN package

Product Summary

SHT3x-DIS is the next generation of Sensirion's temperature and humidity sensors. It builds on a new CMOSens® sensor chip that is at the heart of Sensirion's new humidity and temperature platform. The SHT3x-DIS has increased intelligence, reliability and improved accuracy specifications compared to its predecessor. Its functionality includes enhanced signal processing, two distinctive and user selectable I2C addresses and communication speeds of up to 1 MHz. The DFN package has a footprint of 2.5 x 2.5 mm^2 while keeping a height of 0.9 mm. This allows for integration of the SHT3x-DIS into a great variety of applications. Additionally, the wide supply voltage range of 2.15 V to 5.5 V guarantees compatibility with diverse assembly situations. All in all, the SHT3x-DIS incorporates 15 years of knowledge of Sensirion, the leader in the humidity sensor industry.

Benefits of Sensirion's CMOSens® Technology

- High reliability and long-term stability
- Industry-proven technology with a track record of more than 15 years
- Designed for mass production
- High process capability
- High signal-to-noise ratio

Content

1 Sensor Performance....2
2 Specifications....6
3 Pin Assignment....8
4 Operation and Communication....9
5 Packaging....16
6 Shipping Package....18
7 Quality....19
8 Ordering Information....19
9 Further Information....19

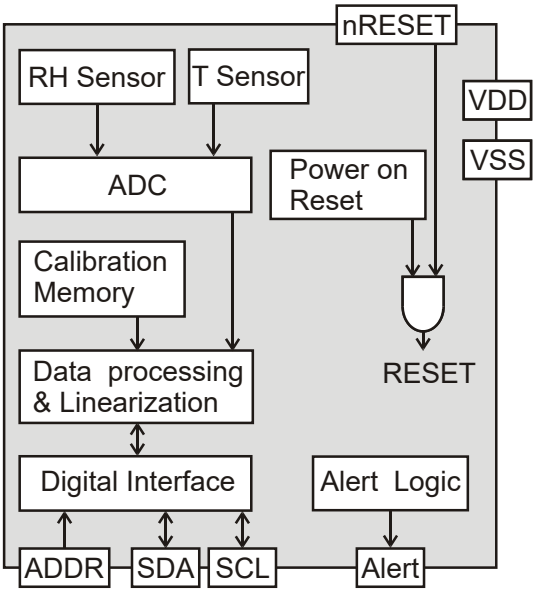

Figure 1 Functional block diagram of the SHT3x-DIS. The sensor signals for humidity and temperature are factory calibrated, linearized and compensated for temperature and supply voltage dependencies.

1 Sensor Performance

Humidity Sensor Specification

Parameter	Condition	Value	Units
SHT30 Accuracy tolerance[1]	Typ.	±2	%RH
	Max.	**Figure 2**	-
SHT31 Accuracy tolerance[1]	Typ.	±2	%RH
	Max.	**Figure 3**	-
SHT35 Accuracy tolerance[1]	Typ.	±1.5	%RH
	Max.	**Figure 4**	-
Repeatability[2]	Low, typ.	0.21	%RH
	Medium, typ.	0.15	%RH
	High, typ.	0.08	%RH
Resolution	Typ.	0.01	%RH
Hysteresis	at 25°C	±0.8	%RH
Specified range[3]	extended[4]	0 to 100	%RH
Response time[5]	$\tau_{63\%}$	8[6]	s
Long-term drift	Typ.[7]	<0.25	%RH/yr

Table 1 Humidity sensor specification.

Temperature Sensor Specification

Parameter	Condition	Value	Units
SHT30 Accuracy tolerance[1]	typ., 0°C to 65°C	±0.2	°C
	Max.	**Figure 8**	-
SHT31 Accuracy tolerance[1]	typ., 0°C to 90°C	±0.2	°C
	Max.	**Figure 9**	-
SHT35 Accuracy tolerance[1]	typ., 20°C to 60°C	±0.1	°C
	Max.	**Figure 10**	-
Repeatability[2]	Low, typ.	0.15	°C
	Medium, typ.	0.08	°C
	High, typ.	0.04	°C
Resolution	Typ.	0.01	°C
Specified Range	-	-40 to 125	°C
Response time [8]	$\tau_{63\%}$	>2	s
Long Term Drift	max	<0.03	°C/yr

Table 2 Temperature sensor specification.

[1] For definition of typical and maximum accuracy tolerance, please refer to the document "Sensirion Humidity Sensor Specification Statement".

[2] The stated repeatability is 3 times the standard deviation (3σ) of multiple consecutive measurements at the stated repeatability and at constant ambient conditions. It is a measure for the noise on the physical sensor output. Different measurement modes allow for high/medium/low repeatability.

[3] Specified range refers to the range for which the humidity or temperature sensor specification is guaranteed.

[4] For details about recommended humidity and temperature operating range, please refer to section 1.1.

[5] Time for achieving 63% of a humidity step function, valid at 25°C and 1m/s airflow. Humidity response time in the application depends on the design-in of the sensor.

[6] With activated ART function (see section 4.7) the response time can be improved by a factor of 2.

[7] Typical value for operation in normal RH/T operating range, see section 1.1. Maximum value is < 0.5 %RH/yr. Higher drift values might occur due to contaminant environments with vaporized solvents, out-gassing tapes, adhesives, packaging materials, etc. For more details please refer to Handling Instructions.

[8] Temperature response times strongly depend on the type of heat exchange, the available sensor surface and the design environment of the sensor in the final application.

Humidity Sensor Performance Graphs

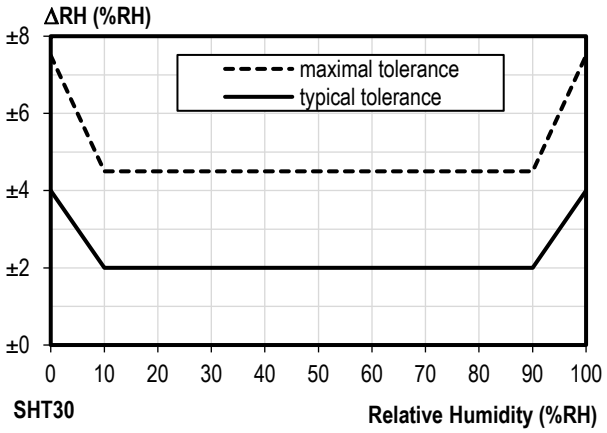

Figure 2 Tolerance of RH at 25°C for SHT30.

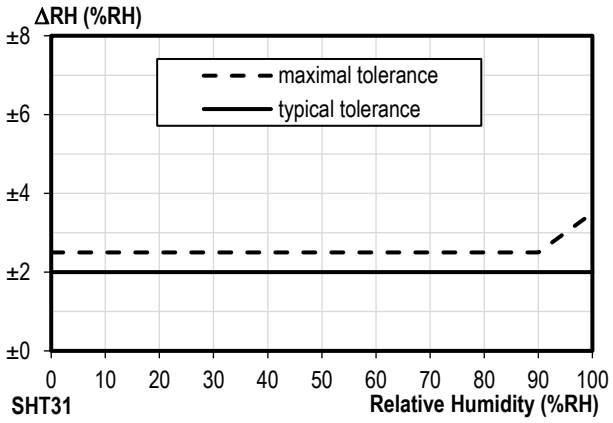

Figure 3 Tolerance of RH at 25°C for SHT31.

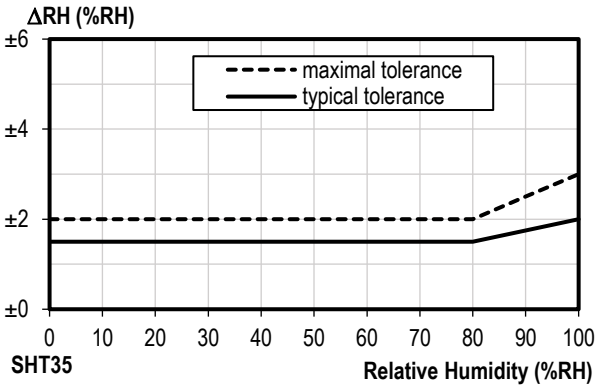

Figure 4 Tolerance of RH at 25°C for SHT35.

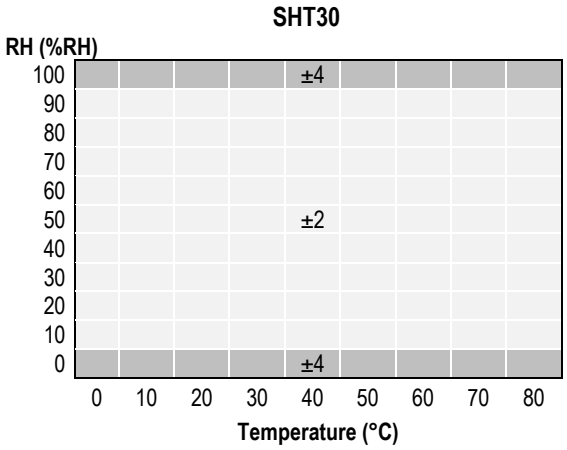

Figure 5 Typical tolerance of RH over T for SHT30.

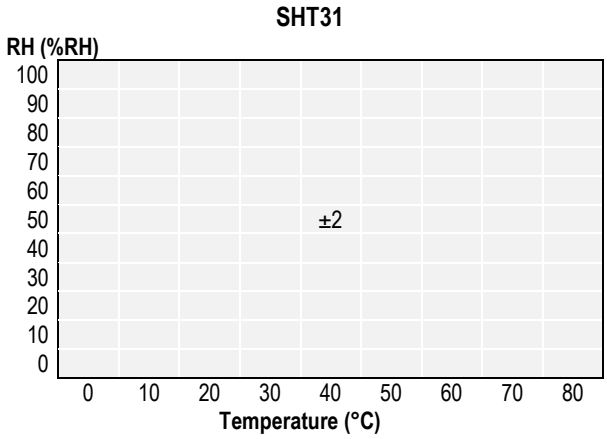

Figure 6 Typical tolerance of RH over T for SHT31.

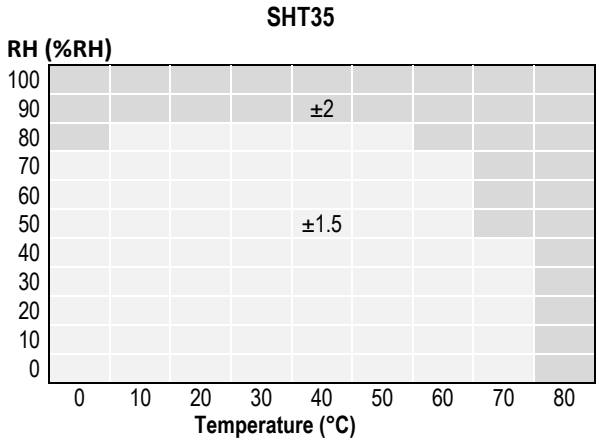

Figure 7 Typical tolerance of RH over T for SHT35.

Temperature Sensor Performance Graphs

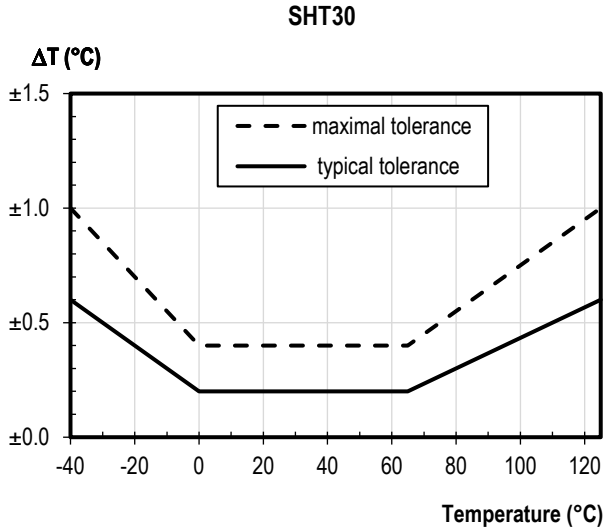

Figure 8 Temperature accuracy of the SHT30 sensor.

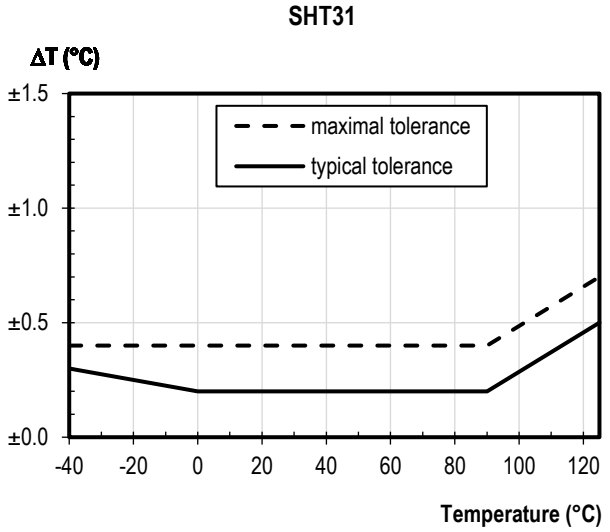

Figure 9 Temperature accuracy of the SHT31 sensor.

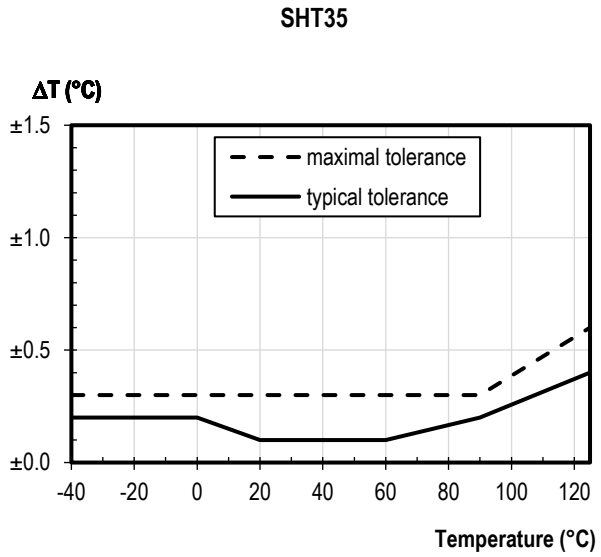

Figure 10 Temperature accuracy of the SHT35 sensor.

1.1 Recommended Operating Condition

The sensor shows best performance when operated within recommended normal temperature and humidity range of 5 °C – 60 °C and 20 %RH – 80 %RH, respectively. Long-term exposure to conditions outside normal range, especially at high humidity, may temporarily offset the RH signal (e.g. +3%RH after 60h kept at >80%RH). After returning into the normal temperature and humidity range the sensor will slowly come back to calibration state by itself. Prolonged exposure to extreme conditions may accelerate ageing. To ensure stable operation of the humidity sensor, the conditions described in the document "SHTxx Assembly of SMD Packages", section "Storage and Handling Instructions" regarding exposure to volatile organic compounds have to be met. Please note as well that this does apply not only to transportation and manufacturing, but also to operation of the SHT3x-DIS.

2 Specifications

2.1 Electrical Specifications

Parameter	Symbol	Condition	Min.	Typ.	Max.	Units	Comments
Supply voltage	V_{DD}		2.15	3.3	5.5	V	
Power-up/down level	V_{POR}		1.8	2.10	2.15	V	
Slew rate change of the supply voltage	$V_{DD,slew}$		-	-	20	V/ms	Voltage changes on the VDD line between $V_{DD,min}$ and $V_{DD,max}$ should be slower than the maximum slew rate; faster slew rates may lead to reset;
Supply current	I_{DD}	idle state (single shot mode) T=25°C	-	0.2	2.0	µA	Current when sensor is not performing a measurement during single shot mode
		idle state (single shot mode) T=125°C	-	-	6.0		
		idle state (periodic data acquisition mode)	-	45	-	µA	Current when sensor is not performing a measurement during periodic data acquisition mode
		Measuring	-	600	1500	µA	Current consumption while sensor is measuring
		Average	-	1.7	-	µA	Current consumption (operation with one measurement per second at lowest repeatability, single shot mode)
Alert Output driving strength	IOH			1.5x V_{DD}		mA	See also section 3.5
Heater power	P_{Heater}	Heater running	3.6	-	33	mW	Depending on the supply voltage

Table 3 Electrical specifications, typical values are valid for T=25°C, min. & max. values for T=-40°C … 125°C

2.2 Timing Specification for the Sensor System

Parameter	Symbol	Conditions	Min.	Typ.	Max.	Units	Comments
Power-up time	t_{PU}	After hard reset, $V_{DD} \geq V_{POR}$	-	0.5	1	ms	Time between V_{DD} reaching V_{POR} and sensor entering idle state
Soft reset time	t_{SR}	After soft reset.	-	0.5	1.5	ms	Time between ACK of soft reset command and sensor entering idle state
Duration of reset pulse	t_{RESETN}		1	-	-	µs	See section 3.6
Measurement duration	$t_{MEAS,l}$	Low repeatability	-	2.5	4	ms	The three repeatability modes differ with respect to measurement duration, noise level and energy consumption.
	$t_{MEAS,m}$	Medium repeatability	-	4.5	6	ms	
	$t_{MEAS,h}$	High repeatability	-	12.5	15	ms	

Table 4 System timing specification, valid from -40 °C to 125 °C and 2.4 V … 5.5 V.

Parameter	Symbol	Conditions	Min.	Typ.	Max.	Units	Comments
Power-up time	t_{PU}	After hard reset, $V_{DD} \geq V_{POR}$	-	0.5	1.5	ms	Time between V_{DD} reaching V_{POR} and sensor entering idle state
Measurement duration	$t_{MEAS,l}$	Low repeatability	-	2.5	4.5	ms	The three repeatability modes differ with respect to measurement duration, noise level and energy consumption.
	$t_{MEAS,m}$	Medium repeatability	-	4.5	6.5	ms	
	$t_{MEAS,h}$	High repeatability	-	12.5	15.5	ms	

Table 5 System timing specification, valid from -40 °C to 125 °C and 2.15 V … < 2.4V.

2.3 Absolute Minimum and Maximum Ratings

Stress levels beyond those listed in Table 6 may cause permanent damage to the device or affect the reliability of the sensor. These are stress ratings only and functional operation of the device at these conditions is not guaranteed. Ratings are only tested each at a time.

Parameter	Rating	Units
Supply voltage V_{DD}	-0.3 to 6	V
Max Voltage on pins (pin 1 (SDA); pin 2 (ADDR); pin 3 (ALERT); pin 4 (SCL); pin 6 (nRESET))	-0.3 to VDD+0.3	V
Input current on any pin	±100	mA
Operating temperature range	-40 to 125	°C
Storage temperature range	-40 to 150	°C
ESD HBM (human body model)[9]	4	kV
ESD CDM (charge device model)[10]	750	V

Table 6 Minimum and maximum ratings; voltages may only be applied for short time periods.

[9] According to ANSI/ESDA/JEDEC JS-001-2014; AEC-Q100-002.
[10] According to ANSI/ESD S5.3.1-2009; AEC-Q100-011.

3 Pin Assignment

The SHT3x-DIS comes in a 8-pin DFN package – see Table 7.

Pin	Name	Comments
1	SDA	Serial data; input / output
2	ADDR	Address pin; input; connect to either logic high or low, do not leave floating
3	ALERT	Indicates alarm condition; output; must be left floating if unused
4	SCL	Serial clock; input / output
5	VDD	Supply voltage; input
6	nRESET	Reset pin active low; input; if not used it is recommended to be left floating; can be connected to VDD with a series resistor of R ≥2 kΩ
7	R	No electrical function; to be connected to VSS
8	VSS	Ground

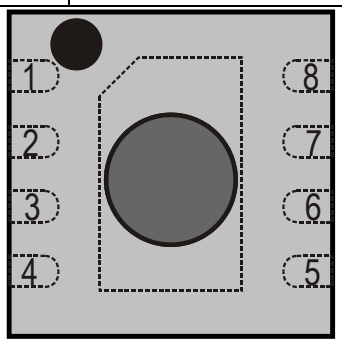

Table 7 SHT3x-DIS pin assignment (transparent top view). Dashed lines are only visible if viewed from below. The die pad is internally connected to VSS.

3.1 Power Pins (VDD, VSS)

The electrical specifications of the SHT3x-DIS are shown in Table 3. The power supply pins must be decoupled with a 100 nF capacitor that shall be placed as close to the sensor as possible – see Figure 11 for a typical application circuit.

3.2 Serial Clock and Serial Data (SCL, SDA)

SCL is used to synchronize the communication between microcontroller and the sensor. The clock frequency can be freely chosen between 0 to 1000 kHz. Commands with clock stretching according to I2C Standard[11] are supported.

The SDA pin is used to transfer data to and from the sensor. Communication with frequencies up to 400 kHz must meet the I2C *Fast Mode*[11] standard. Communication frequencies up to 1 Mhz are supported following the specifications given in **Table 21**.

Both SCL and SDA lines are open-drain I/Os with diodes to VDD and VSS. They should be connected to external pull-up resistors (please refer to Figure 11). A device on the I2C bus must only drive a line to ground. The external pull-up resistors (e.g. R_p=10 kΩ) are required to pull the signal high. For dimensioning resistor sizes please take bus capacity and communication frequency into account (see for example Section 7.1 of NXPs I2C Manual for more details[11]). It should be noted that pull-up resistors may be included in I/O circuits of microcontrollers. It is recommended to wire the sensor according to the application circuit as shown in Figure 11.

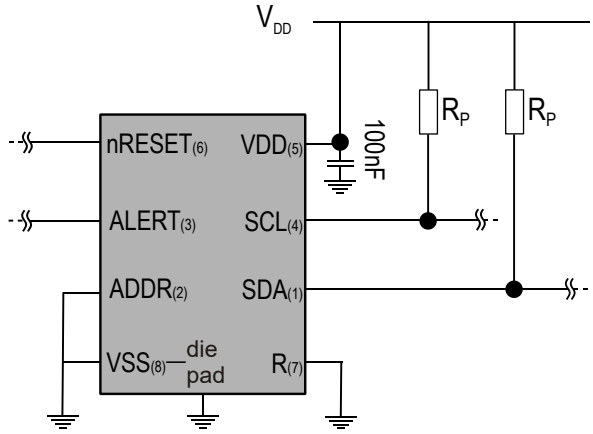

Figure 11 Typical application circuit. Please note that the positioning of the pins does not reflect the position on the real sensor. This is shown in Table 7.

3.3 Die Pad (center pad)

The die pad or center pad is visible from below and located in the center of the package. It is electrically connected to VSS. Hence electrical considerations do not impose constraints on the wiring of the die pad. However, due to mechanical reasons it is recommended to solder the center pad to the PCB. For more information on design-in, please refer to the document "SHTxx_STSxx Design Guide".

3.4 ADDR Pin

Through the appropriate wiring of the ADDR pin the I2C address can be selected (see Table 8 for the respective addresses). The ADDR pin can either be connected to logic high or logic low. The address of the sensor can be changed dynamically during operation by switching the level on the ADDR pin. The only constraint is that the level has to stay constant starting from the I2C start condition until the communication is finished. This allows to connect more than two SHT3x-DIS onto the same bus.

[11] http://www.nxp.com/documents/user_manual/UM10204.pdf

The dynamical switching requires individual ADDR lines to the sensors.

Please note that the I2C address is represented through the 7 MSBs of the I2C read or write header. The LSB switches between read or write header. The wiring for the default address is shown in Table 8 and Figure 11. The ADDR pin must not be left floating. Please note that only the 7 MSBs of the I2C Read/Write header constitute the I2C Address.

SHT3x-DIS	I2C Address in Hex. representation	Condition
I2C address A	0x44 (default)	ADDR (pin 2) connected to logic low
I2C address B	0x45	ADDR (pin 2) connected to logic high

Table 8 I2C device addresses.

3.5 ALERT Pin

The alert pin may be used to connect to the interrupt pin of a microcontroller. The output of the pin depends on the value of the RH/T reading relative to programmable limits. Its function is explained in a separate application note. If not used, this pin must be left floating. The pin switches high, when alert conditions are met. The maximum driving loads are listed in Table 3. Be aware that self-heating might occur, depending on the amount of current that flows. Self-heating can be prevented if the Alert Pin is only used to switch a transistor.

3.6 nRESET Pin

The nReset pin may be used to generate a reset of the sensor. A minimum pulse duration of 1 µs is required to reliably trigger a reset of the sensor. Its function is explained in more detail in section 4. If not used it is recommended to leave the pin floating or to connect it to VDD with a series resistor of R ≥2 kΩ. However, the nRESET pin is internally connected to VDD with a pull up resistor of R = 50 kΩ (typ.).

4 Operation and Communication

The SHT3x-DIS supports I2C fast mode (and frequencies up to 1000 kHz). Clock stretching can be enabled and disabled through the appropriate user command. For detailed information on the I2C protocol, refer to NXP I2C-bus specification[12].

After sending a command to the sensor a minimal waiting time of 1ms is needed before another command can be received by the sensor.

All SHT3x-DIS commands and data are mapped to a 16-bit address space. Additionally, data and commands are protected with a CRC checksum. This increases communication reliability. The 16 bits commands to the sensor already include a 3 bit CRC checksum. Data sent from and received by the sensor is always succeeded by an 8 bit CRC.

In write direction it is mandatory to transmit the checksum, since the SHT3x-DIS only accepts data if it is followed by the correct checksum. In read direction it is left to the master to read and process the checksum.

4.1 Power-Up and Communication Start

The sensor starts powering-up after reaching the power-up threshold voltage V_{POR} specified in Table 3. After reaching this threshold voltage the sensor needs the time t_{PU} to enter idle state. Once the idle state is entered it is ready to receive commands from the master (microcontroller).

Each transmission sequence begins with a START condition (S) and ends with a STOP condition (P) as described in the I2C-bus specification. Whenever the sensor is powered up, but not performing a measurement or communicating, it automatically enters idle state for energy saving. This idle state cannot be controlled by the user.

4.2 Starting a Measurement

A measurement communication sequence consists of a START condition, the I2C write header (7-bit I2C device address plus 0 as the write bit) and a 16-bit measurement command. The proper reception of each byte is indicated by the sensor. It pulls the SDA pin low (ACK bit) after the falling edge of the 8th SCL clock to indicate the reception. A complete measurement cycle is depicted in Table 9.

With the acknowledgement of the measurement command, the SHT3x-DIS starts measuring humidity and temperature.

4.3 Measurement Commands for Single Shot Data Acquisition Mode

In this mode one issued measurement command triggers the acquisition of *one data pair*. Each data pair consists of one 16 bit temperature and one 16 bit humidity value (in this order). During transmission each data value is always followed by a CRC checksum, see section 4.4.

[12] http://www.nxp.com/documents/user_manual/UM10204.pdf

In single shot mode different measurement commands can be selected. The 16 bit commands are shown in Table 9. They differ with respect to repeatability (low, medium and high) and clock stretching (enabled or disabled).

The repeatability setting influences the measurement duration and thus the overall energy consumption of the sensor. This is explained in section 2.

Condition		Hex. code	
Repeatability	Clock stretching	MSB	LSB
High	enabled	0x2C	06
Medium			0D
Low			10
High	disabled	0x24	00
Medium			0B
Low			16

e.g. 0x2C06: high repeatability measurement with clock stretching enabled

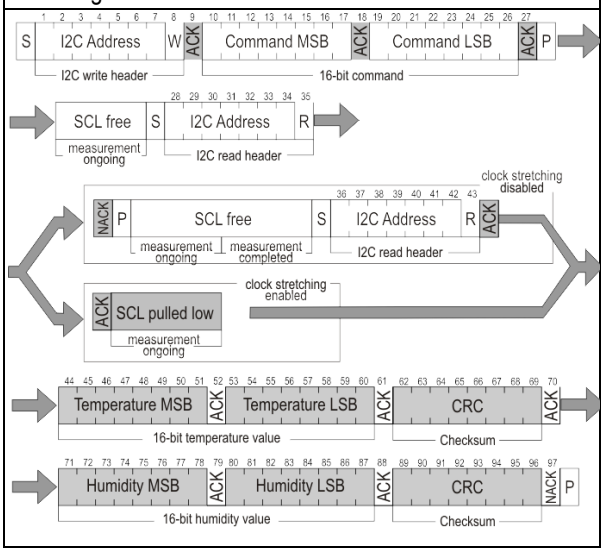

Table 9 Measurement commands in single shot mode. The first "SCL free" block indicates a minimal waiting time of 1ms. (Clear blocks are controlled by the microcontroller, grey blocks by the sensor).

4.4 Readout of Measurement Results for Single Shot Mode

After the sensor has completed the measurement, the master can read the measurement results (pair of RH& T) by sending a START condition followed by an I2C read header. The sensor will acknowledge the reception of the read header and send two bytes of data (temperature) followed by one byte CRC checksum and another two bytes of data (relative humidity) followed by one byte CRC checksum. Each byte must be acknowledged by the microcontroller with an ACK condition for the sensor to continue sending data. If the sensor does not receive an ACK from the master after any byte of data, it will not continue sending data.

The sensor will send the temperature value first and then the relative humidity value. After having received the checksum for the humidity value a NACK and stop condition should be sent (see Table 9).

The I2C master can abort the read transfer with a NACK condition after any data byte if it is not interested in subsequent data, e.g. the CRC byte or the second measurement result, in order to save time.

In case the user needs humidity and temperature data but does not want to process CRC data, it is recommended to read the two temperature bytes of data with the CRC byte (without processing the CRC data); after having read the two humidity bytes, the read transfer can be aborted with a with a NACK.

No Clock Stretching

When a command without clock stretching has been issued, the sensor responds to a read header with a not acknowledge (NACK), if no data is present.

Clock Stretching

When a command with clock stretching has been issued, the sensor responds to a read header with an ACK and subsequently pulls down the SCL line. The SCL line is pulled down until the measurement is complete. As soon as the measurement is complete, the sensor releases the SCL line and sends the measurement results.

4.5 Measurement Commands for Periodic Data Acquisition Mode

In this mode one issued measurement command yields *a stream of data pairs*. Each data pair consists of one 16 bit temperature and one 16 bit humidity value (in this order).

In periodic mode different measurement commands can be selected. The corresponding 16 bit commands are shown in Table 10. They differ with respect to repeatability (low, medium and high) and data acquisition frequency (0.5, 1, 2, 4 & 10 measurements per second, mps). Clock stretching cannot be selected in this mode.

The data acquisition frequency and the repeatability setting influences the measurement duration and the current consumption of the sensor. This is explained in section 2 of this datasheet.

If a measurement command is issued, while the sensor is busy with a measurement (measurement durations see Table 4), it is recommended to issue a break command first (see section 4.8). Upon reception of the

break command the sensor abort the ongoing measurement and enter the single shot mode.

Condition		Hex. code	
Repeatability	mps	MSB	LSB
High	0.5	0x20	32
Medium			24
Low			2F
High	1	0x21	30
Medium			26
Low			2D
High	2	0x22	36
Medium			20
Low			2B
High	4	0x23	34
Medium			22
Low			29
High	10	0x27	37
Medium			21
Low			2A
e.g. 0x2130: 1 high repeatability mps - measurement per second			

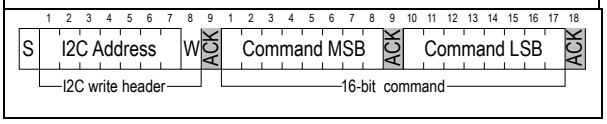

Table 10 Measurement commands for periodic data acquisition mode (Clear blocks are controlled by the microcontroller, grey blocks by the sensor). N.B.: At the highest mps setting self-heating of the sensor might occur.

4.6 Readout of Measurement Results for Periodic Mode

Transmission of the measurement data can be initiated through the fetch data command shown in Table 11. If no measurement data is present the I2C read header is responded with a NACK (Bit 9 in Table 11) and the communication stops. After the read out command fetch data has been issued, the data memory is cleared, i.e. no measurement data is present.

Command	Hex code
Fetch Data	0x E0 00

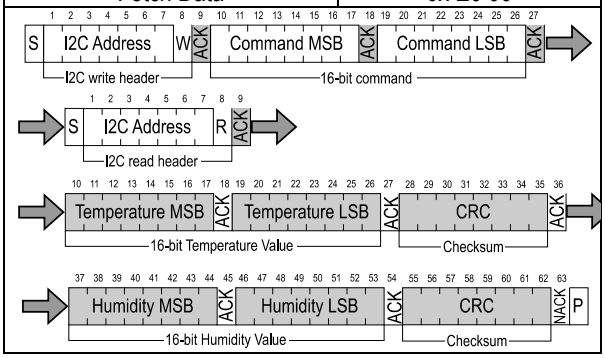

Table 11 Fetch Data command (Clear blocks are controlled by the microcontroller, grey blocks by the sensor).

4.7 ART Command

The ART (accelerated response time) feature can be activated by issuing the command in Table 12. After issuing the ART command the sensor will start acquiring data with a frequency of 4Hz.

The ART command is structurally similar to any other command in Table 10. Hence section 4.5 applies for starting a measurement, section 4.6 for reading out data and section 4.8 for stopping the periodic data acquisition.

The ART feature can also be evaluated using the Evaluation Kit EK-H5 from Sensirion.

Command	Hex Code
Periodic Measurement with ART	0x2B32

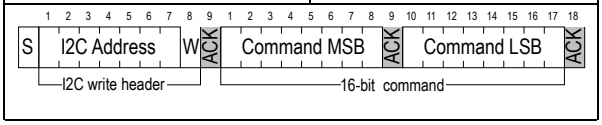

Table 12 Command for a periodic data acquisition with the ART feature (Clear blocks are controlled by the microcontroller, grey blocks by the sensor).

4.8 Break command / Stop Periodic Data Acquisition Mode

The periodic data acquisition mode can be stopped using the break command shown in Table 13. It is recommended to stop the periodic data acquisition prior to sending another command (except Fetch Data command) using the break command. Upon reception of the break command the sensor will abort the ongoing measurement and enter the single shot mode. This takes 1ms.

Command	Hex Code
Break	0x3093

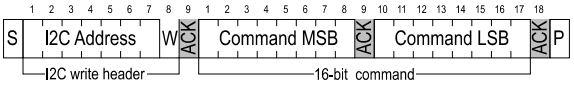

Table 13 Break command (Clear blocks are controlled by the microcontroller, grey blocks by the sensor).

4.9 Reset

A system reset of the SHT3x-DIS can be generated externally by issuing a command (soft reset) or by sending a pulse to the dedicated reset pin (nReset pin). Additionally, a system reset is generated internally during power-up. During the reset procedure the sensor will not process commands.

In order to achieve a full reset of the sensor without removing the power supply, it is recommended to use the nRESET pin of the SHT3x-DIS.

Interface Reset

If communication with the device is lost, the following signal sequence will reset the serial interface: While leaving SDA high, toggle SCL nine or more times. This must be followed by a Transmission Start sequence preceding the next command. This sequence resets the interface only. The status register preserves its content.

Soft Reset / Re-Initialization

The SHT3x-DIS provides a soft reset mechanism that forces the system into a well-defined state without removing the power supply. When the system is in idle state the soft reset command can be sent to the SHT3x-DIS. This triggers the sensor to reset its system controller and reloads calibration data from the memory. In order to start the soft reset procedure the command as shown in Table 14 should be sent.

It is worth noting that the sensor reloads calibration data prior to every measurement by default.

Command	Hex Code
Soft Reset	0x30A2

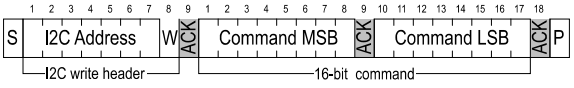

Table 14 Soft reset command (Clear blocks are controlled by the microcontroller, grey blocks by the sensor).

Reset through General Call

Additionally, a reset of the sensor can also be generated using the "general call" mode according to I2C-bus specification[12]. This generates a reset which is functionally identical to using the nReset pin. It is important to understand that a reset generated in this way is not device specific. All devices on the same I2C bus that support the general call mode will perform a reset. Additionally, this command only works when the sensor is able to process I2C commands. The appropriate command consists of two bytes and is shown in **Table 15**.

Command	Code
Address byte	0x00
Second byte	0x06
Reset command using the general call address	0x0006

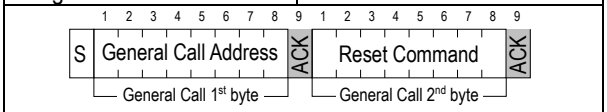

Table 15 Reset through the general call address (Clear blocks are controlled by the microcontroller, grey blocks by the sensor).

Reset through the nReset Pin

Pulling the nReset pin low (see Table 7) generates a reset similar to a hard reset. The nReset pin is internally connected to VDD through a pull-up resistor and hence active low. The nReset pin has to be pulled low for a minimum of 1 µs to generate a reset of the sensor.

Hard Reset

A hard reset is achieved by switching the supply voltage to the VDD Pin off and then on again. In order to prevent powering the sensor over the ESD diodes, the voltage to pins 1 (SDA), 4 (SCL) and 2 (ADDR) also needs to be removed.

4.10 Heater

The SHT3x is equipped with an internal heater, which is meant for plausibility checking only. The temperature increase achieved by the heater depends on various parameters and lies in the range of a few degrees centigrade. It can be switched on and off by command, see table below. The status is listed in the status register. After a reset the heater is disabled (default condition).

Command	Hex Code	
	MSB	LSB
Heater Enable	0x30	6D
Heater Disabled		66

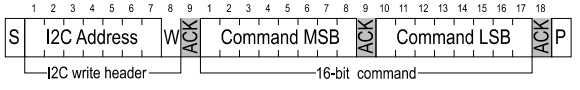

Table 16 Heater command (Clear blocks are controlled by the microcontroller, grey blocks by the sensor).

4.11 Status Register

The status register contains information on the operational status of the heater, the alert mode and on the execution status of the last command and the last write sequence. The command to read out the status register is shown in Table 17 whereas a description of the content can be found in Table 18.

Command	Hex code
Read Out of status register	0xF32D

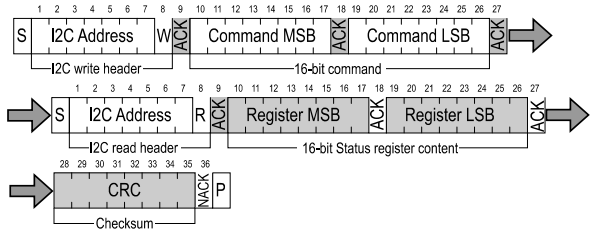

Table 17 Command to read out the status register (Clear blocks are controlled by the microcontroller, grey blocks by the sensor).

Bit	Field description	Default value
15	Alert pending status '0': no pending alerts '1': at least one pending alert	'1'
14	Reserved	'0'
13	Heater status '0' : Heater OFF '1' : Heater ON	'0'
12	Reserved	'0'
11	RH tracking alert '0' : no alert '1' . alert	'0
10	T tracking alert '0' : no alert '1' . alert	'0'
9:5	Reserved	'xxxxx'
4	System reset detected '0': no reset detected since last 'clear status register' command '1': reset detected (hard reset, soft reset command or supply fail)	'1'
3:2	Reserved	'00'
1	Command status '0': last command executed successfully '1': last command not processed. It was either invalid, failed the integrated command checksum	'0'
0	Write data checksum status '0': checksum of last write transfer was correct '1': checksum of last write transfer failed	'0'

Table 18 Description of the status register.

Clear Status Register

All flags (Bit 15, 11, 10, 4) in the status register can be cleared (set to zero) by sending the command shown in Table 19.

Command	Hex Code
Clear status register	0x 30 41

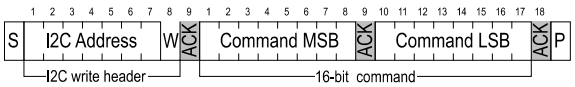

Table 19 Command to clear the status register (Clear blocks are controlled by the microcontroller, grey blocks by the sensor).

4.12 Checksum Calculation

The 8-bit CRC checksum transmitted after each data word is generated by a CRC algorithm. Its properties are displayed in Table 20. The CRC covers the contents of the two previously transmitted data bytes. To calculate

the checksum only these two previously transmitted data bytes are used.

Property	Value
Name	CRC-8
Width	8 bit
Protected data	read and/or write data
Polynomial	0x31 ($x^8 + x^5 + x^4 + 1$)
Initialization	0xFF
Reflect input	False
Reflect output	False
Final XOR	0x00
Examples	CRC (0xBEEF) = 0x92

Table 20 I2C CRC properties.

4.13 Conversion of Signal Output

Measurement data is always transferred as 16-bit values (unsigned integer). These values are already linearized and compensated for temperature and supply voltage effects. Converting those raw values into a physical scale can be achieved using the following formulas.

Relative humidity conversion formula (result in %RH):

$$RH = 100 \cdot \frac{S_{RH}}{2^{16} - 1}$$

Temperature conversion formula (result in °C & °F):

$$T[°C] = -45 + 175 \cdot \frac{S_T}{2^{16} - 1}$$

$$T[°F] = -49 + 315 \cdot \frac{S_T}{2^{16} - 1}$$

S_{RH} and S_T denote the raw sensor output for humidity and temperature, respectively. The formulas work only correctly when S_{RH} and S_T are used in decimal representation.

4.14 Communication Timing

Parameter	Symbol	Conditions	Min.	Typ.	Max.	Units	Comments
SCL clock frequency	f_{SCL}		0	-	1000	kHz	
Hold time (repeated) START condition	$t_{HD;STA}$	After this period, the first clock pulse is generated	0.24	-	-	µs	
LOW period of the SCL clock	t_{LOW}		0.53	-	-	µs	
HIGH period of the SCL clock	t_{HIGH}		0.26	-	-	µs	
SDA hold time	$t_{HD;DAT}$		0	-	250	ns	Transmitting data
			0	-	-	ns	Receiving data
SDA set-up time	$t_{SU;DAT}$		100	-	-	ns	
SCL/SDA rise time	t_R		-	-	300	ns	
SCL/SDA fall time	t_F		-	-	300	ns	
SDA valid time	$t_{VD;DAT}$		-	-	0.9	µs	
Set-up time for a repeated START condition	$t_{SU;STA}$		0.26	-	-	µs	
Set-up time for STOP condition	$t_{SU;STO}$		0.26	-	-	µs	
Capacitive load on bus line	CB		-	-	400	pF	
Low level input voltage	V_{IL}		0	-	$0.3xV_{DD}$	V	
High level input voltage	V_{IH}		$0.7xV_{DD}$	-	$1xV_{DD}$	V	
Low level output voltage	V_{OL}	3 mA sink current	-	-	0.4	V	

Table 21 Timing specifications for I2C communication, valid for T=-40°C … 125°C and VDD = VDD_{min} … VDD_{max}. The nomenclature above is according to the I2C (UM10204, Rev. 6, April 4, 2014).

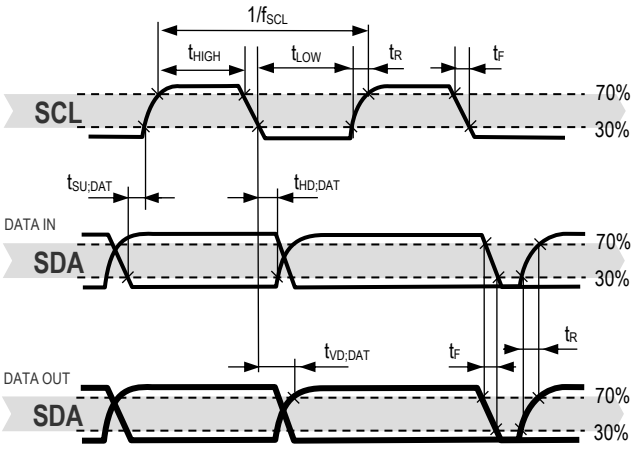

Figure 12 Timing diagram for digital input/output pads. SDA directions are seen from the sensor. Bold SDA lines are controlled by the sensor, plain SDA lines are controlled by the micro-controller. Note that SDA valid read time is triggered by falling edge of preceding toggle.

5 Packaging

SHT3x-DIS sensors are provided in an open-cavity DFN package. DFN stands for dual flat no leads. The humidity sensor opening is centered on the top side of the package.

The sensor chip is made of silicon and is mounted to a lead frame. The latter is made of Cu plated with Ni/Pd/Au. Chip and lead frame are overmolded by an epoxy-based mold compound leaving the central die pad and I/O pins exposed for mechanical and electrical connection. Please note that the side walls of the sensor are diced and therefore these diced lead frame surfaces are not covered with the respective plating.

The package (except for the humidity sensor opening) follows JEDEC publication 95, design registration 4.20, small scale plastic quad and dual inline, square and rectangular, No-LEAD packages (with optional thermal enhancements) small scale (QFN/SON), Issue D.01, September 2009.

SHT3x-DIS has a Moisture Sensitivity Level (MSL) of 1, according to IPC/JEDEC J-STD-020. At the same time, it is recommended to further process the sensors within 1 year after date of delivery.

5.1 Traceability

All SHT3x-DIS sensors are laser marked for easy identification and traceability. The marking on the sensor top side consists of a pin-1 indicator and two lines of text.

The top line consists of the pin-1 indicator which is located in the top left corner and the product name. The small letter x stands for the accuracy class.

The bottom line consists of 6 letters. The first two digits XY (=DI) describe the output mode. The third letter (A) represents the manufacturing year (4 = 2014, 5 = 2015, etc). The last three digits (BCD) represent an alphanumeric tracking code. That code can be decoded by Sensirion only and allows for tracking on batch level through production, calibration and testing – and will be provided upon justified request.

If viewed from below pin 1 is indicated by triangular shaped cut in the otherwise rectangular die pad. The dimensions of the triangular cut are shown in Figure 14 through the labels T1 & T2.

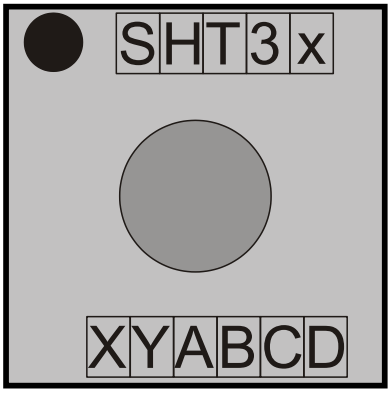

Figure 13 Top view of the SHT3x-DIS illustrating the laser marking.

5.2 Package Outline

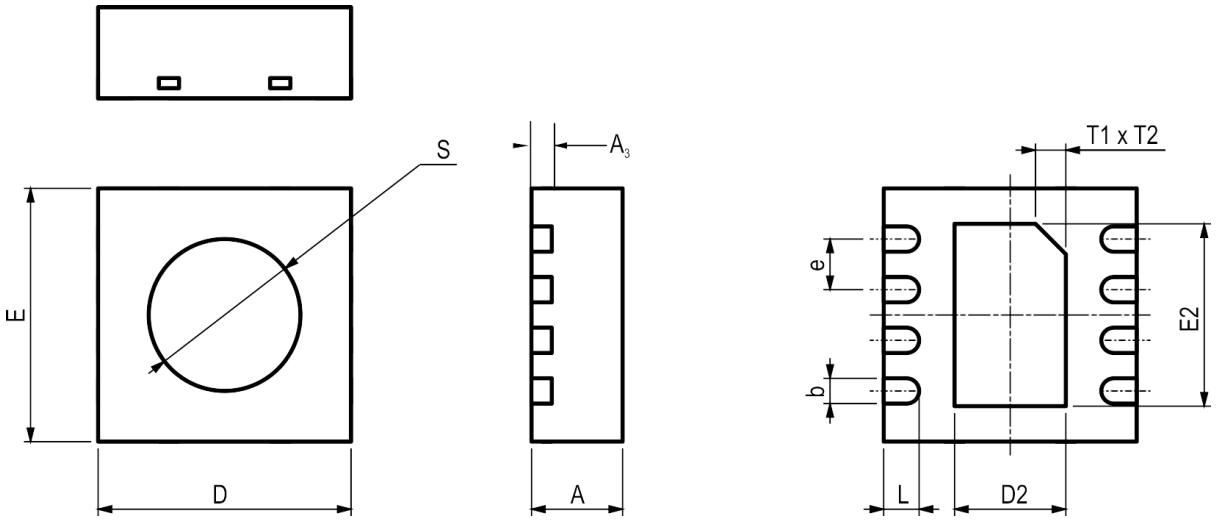

Figure 14 Dimensional drawing of SHT3x-DIS sensor package

Parameter	Symbol	Min	Nom.	Max	Units	Comments
Package height	A	0.8	0.9	1	mm	
Leadframe height	A3	-	0.2	-	mm	
Pad width	b	0.2	0.25	0.3	mm	
Package width	D	2.4	2.5	2.6	mm	
Center pad length	D2	1	1.1	1.2	mm	
Package length	E	2.4	2.5	2.6	mm	
Center pad width	E2	1.7	1.8	1.9	mm	
Pad pitch	e	-	0.5		mm	
Pad length	L	0.25	0.35	0.45	mm	
Max cavity	S	-	-	1.5	mm	Only as guidance. This value includes all tolerances, including displacement tolerances. Typically the opening will be smaller.
Center pad marking	T1xT2	-	0.3x45°	-	mm	indicates the position of pin 1

Table 22 Package outline.

5.3 Land Pattern

Figure 15 shows the land pattern. The land pattern is understood to be the open metal areas on the PCB, onto which the DFN pads are soldered.

The solder mask is understood to be the insulating layer on top of the PCB covering the copper traces. It is recommended to design the solder pads as a Non-Solder Mask Defined (NSMD) type. For NSMD pads, the solder mask opening should provide a 60 µm to 75 µm design clearance between any copper pad and solder mask. As the pad pitch is only 0.5 mm we recommend to have one solder mask opening for all 4 I/O pads on one side.

For solder paste printing it is recommended to use a laser-cut, stainless steel stencil with electro-polished trapezoidal walls and with 0.1 or 0.125 mm stencil thickness. The length of the stencil apertures for the I/O pads should be the same as the PCB pads. However, the position of the stencil apertures should have an offset of 0.1 mm away from the center of the package. The die pad aperture should cover about 70 – 90 % of the die pad area –thus it should have a size of about 0.9 mm x 1.6 mm.

For information on the soldering process and further recommendation on the assembly process please consult the Application Note HT_AN_SHTxx_Assembly_of_SMD_Packages , which can be found on the Sensirion webpage.

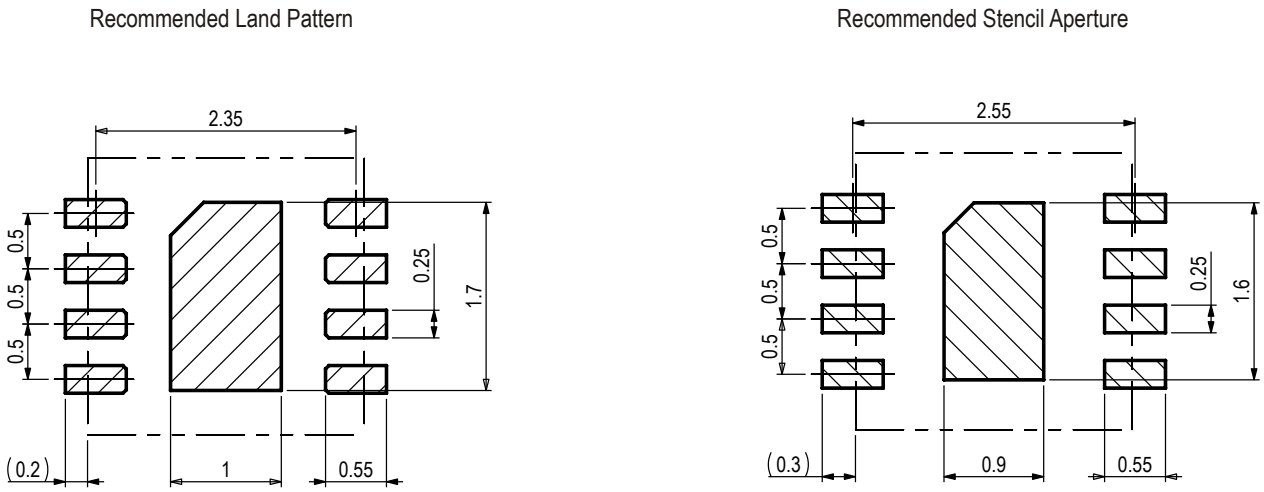

Figure 15 Recommended metal land pattern (left) and stencil apertures (right) for SHT3x-DIS. The dashed lines represent the outer dimension of the DFN package. The PCB pads (left) and stencil apertures (right) are indicated through the shaded areas.

6 Shipping Package

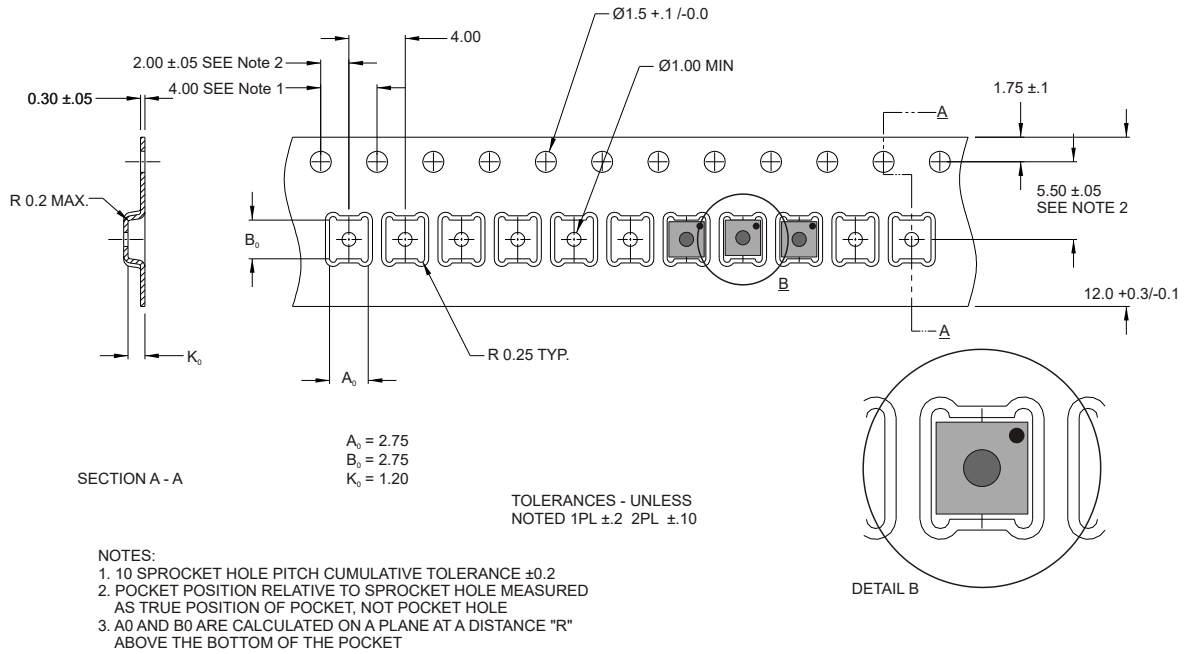

Figure 16 Technical drawing of the packaging tape with sensor orientation in tape. Header tape is to the right and trailer tape to the left on this drawing. Dimensions are given in millimeters.

7 Quality

Qualification of the SHT3x-DIS is performed based on the JEDEC JESD47 qualification test method.

7.1 Material Contents

The device is fully RoHS and WEEE compliant, e.g. free of Pb, Cd, and Hg.

8 Ordering Information

The SHT3x-DIS can be ordered in tape and reel packaging with different sizes, see Table 23. The reels are sealed into antistatic ESD bags. The document "SHT3x shipping package" that shows the details about the shipping package is available upon request.

Name	Quantity	Order Number
SHT30-DIS-B2.5kS	2500	1-101400-01
SHT30-DIS-B10kS	10000	1-101173-01
SHT31-DIS-B2.5kS	2500	1-101386-01
SHT31-DIS-B10kS	10000	1-101147-01
SHT35-DIS-B2.5kS	2500	1-101388-01
SHT35-DIS-B10kS	10000	1-101479-01

Table 23 SHT3x-DIS ordering options.

9 Further Information

For more in-depth information on the SHT3x-DIS and its application please consult the documents in **Table 24**. Parameter values specified in the datasheet overrule possibly conflicting statements given in references cited in this datasheet.

Document Name	Description	Source
SHT3x Shipping Package	Information on Tape, Reel and shipping bags (technical drawing and dimensions)	Available upon request
SHTxx_STSxx Assembly of SMD Packages	Assembly Guide (Soldering Instructions)	Available for download at the Sensirion humidity sensors download center: www.sensirion.com/humidity-download
SHTxx_STSxx Design Guide	Design guidelines for designing SHTxx humidity sensors into applications	Available for download at the Sensirion humidity sensors download center: www.sensirion.com/humidity-download
SHTxx Handling Instructions	Guidelines for proper handling of SHTxx humidity sensors	Available for download at the Sensirion humidity sensors download center: www.sensirion.com/humidity-download
Sensirion Humidity Sensor Specification Statement	Definition of sensor specifications.	Available for download at the Sensirion humidity sensors download center: www.sensirion.com/humidity-download

Table 24 Documents containing further information relevant for theSHT3x-DIS.

Revision History

Date	Version	Page(s)	Changes
October 2015	1		-
June 2016	2	2-4	Specifications for SHT35 added
		6	ESD specifications updated
		7	**Table 7** "Comments" section updated
		7	**Figure 11** updated according to **Table 7**
		11	Updated information about data memory to: "After the read out command "fetch data" has been issued, the data memory is reset, i.e. no measurement data is present.
		17	Ordering information in **Table 23** updated
August 2016	3	6	Updated **Table 3**
		7	Updated **Table 4**
		7	Updated information on ESD testing norm
		8	Updated **Table 7**
		8	**Figure 11** and **Table 7** updated
		4	**Figure 7** updated
March 2017	4	2-5	Updated RH&T accuracy specifications, see **Table 1**, **Table 2**, **Figure 2**, **Figure 5**, **Figure 8**, **Figure 9** and **Figure 10**
		9	**Table 8** updated
		6	**Table 3** updated
		8	**Figure 11** updated
		15	**Table 21** updated
		17	**Table 22** updated
		18	**Figure 15** land pattern drawing simplified (no parameter changed)
		19	Inlcuded: "Parameter values specified in the datasheet overrule possibly conflicting statements given in references cited in this datasheet."

22 May 2018	5	multiple	VDD_{min}=2.15V
		multiple	Typo & formatting correction
		2	Updated RH repeatability values in **Table 1**
		2	Updated T repeatability and resolution in **Table 2**
		6	**Table 3** Updated VDD_{min} and POR levels Updated supply current values Updated specification range
		7	Updated soft reset time in **Table 4**
		7	Introduced **Table 5**
		7	Introduced “Ratings are only tested each at a time.” in section 2.3
		9	Introduced “After sending a command to the sensor a minimal waiting time of 1ms is needed before another command can be received by the sensor.” In section 4
		9	Removed: “The stop condition is optional.” in section 4.1
		10	Updated label of **Table 9** with “The first “SCL free” block indicates a minimal waiting time of 1ms.”
		10	Updated section 4.5 to “Upon reception of the break command the sensor abort the ongoing measurement and enter the single shot mode.”
		11	Updated section 4.8 to “Upon reception of the break command the sensor will abort the ongoing measurement and enter the single shot mode. This takes 1ms.”
		14	Updated **Table 21**
February 2019	6	19	Revised qualification test method in section 7

Important Notices

Warning, Personal Injury

Do not use this product as safety or emergency stop devices or in any other application where failure of the product could result in personal injury. Do not use this product for applications other than its intended and authorized use. Before installing, handling, using or servicing this product, please consult the data sheet and application notes. Failure to comply with these instructions could result in death or serious injury.

If the Buyer shall purchase or use SENSIRION products for any unintended or unauthorized application, Buyer shall defend, indemnify and hold harmless SENSIRION and its officers, employees, subsidiaries, affiliates and distributors against all claims, costs, damages and expenses, and reasonable attorney fees arising out of, directly or indirectly, any claim of personal injury or death associated with such unintended or unauthorized use, even if SENSIRION shall be allegedly negligent with respect to the design or the manufacture of the product.

ESD Precautions

The inherent design of this component causes it to be sensitive to electrostatic discharge (ESD). To prevent ESD-induced damage and/or degradation, take customary and statutory ESD precautions when handling this product.
See application note "ESD, Latchup and EMC" for more information.

Warranty

SENSIRION warrants solely to the original purchaser of this product for a period of 12 months (one year) from the date of delivery that this product shall be of the quality, material and workmanship defined in SENSIRION's published specifications of the product. Within such period, if proven to be defective, SENSIRION shall repair and/or replace this product, in SENSIRION'S discretion, free of charge to the Buyer, provided that:

- notice in writing describing the defects shall be given to SENSIRION within fourteen (14) days after their appearance;
- such defects shall be found, to SENSIRION's reasonable satisfaction, to have arisen from SENSIRION's faulty design, material, or workmanship;
- the defective product shall be returned to SENSIRION's factory at the Buyer's expense; and
- the warranty period for any repaired or replaced product shall be limited to the unexpired portion of the original period.

This warranty does not apply to any equipment which has not been installed and used within the specifications recommended by SENSIRION for the intended and proper use of the equipment. EXCEPT FOR THE WARRANTIES EXPRESSLY SET FORTH HEREIN, SENSIRION MAKES NO WARRANTIES, EITHER EXPRESS OR IMPLIED, WITH RESPECT TO THE PRODUCT. ANY AND ALL WARRANTIES, INCLUDING WITHOUT LIMITATION, WARRANTIES OF MERCHANTABILITY OR FITNESS FOR A PARTICULAR PURPOSE, ARE EXPRESSLY EXCLUDED AND DECLINED.
SENSIRION is only liable for defects of this product arising under the conditions of operation provided for in the data sheet and proper use of the goods. SENSIRION explicitly disclaims all warranties, express or implied, for any period during which the goods are operated or stored not in accordance with the technical specifications.
SENSIRION does not assume any liability arising out of any application or use of any product or circuit and specifically disclaims any and all liability, including without limitation consequential or incidental damages. All operating parameters, including without limitation recommended parameters, must be validated for each customer's applications by customer's technical experts. Recommended parameters can and do vary in different applications.
SENSIRION reserves the right, without further notice, (i) to change the product specifications and/or the information in this document and (ii) to improve reliability, functions and design of this product.

Copyright © 2019, by SENSIRION.
CMOSens® is a trademark of Sensirion
All rights reserved

Headquarters and Subsidiaries

SENSIRION AG
Laubisruetistr. 50
CH-8712 Staefa ZH
Switzerland

phone: +41 44 306 40 00
fax: +41 44 306 40 30
info@sensirion.com
www.sensirion.com

Sensirion Taiwan Co. Ltd.
phone: +41 44 306 40 00
info@sensirion.com

Sensirion Inc. USA
phone: +1 312 690 5858
info-us@sensirion.com
www.sensirion.com

Sensirion Japan Co. Ltd.
phone: +81 3 3444 4940
info-jp@sensirion.com
www.sensirion.co.jp

Sensirion Korea Co. Ltd.
phone: +82 31 337 7700~3
info-kr@sensirion.com
www.sensirion.co.kr

Sensirion China Co. Ltd.
phone: +86 755 8252 1501
info-cn@sensirion.com
www.sensirion.com.cn/

To find your local representative, please visit www.sensirion.com/contact

- **Approximates Human Eye Response**
- **Programmable Interrupt Function with User-Defined Upper and Lower Threshold Settings**
- **16-Bit Digital Output with SMBus (TSL2560) at 100 kHz or I²C (TSL2561) Fast-Mode at 400 kHz**
- **Programmable Analog Gain and Integration Time Supporting 1,000,000-to-1 Dynamic Range**
- **Automatically Rejects 50/60-Hz Lighting Ripple**
- **Low Active Power (0.75 mW Typical) with Power Down Mode**
- **RoHS Compliant**

PACKAGE CS
6-LEAD CHIPSCALE
(TOP VIEW)

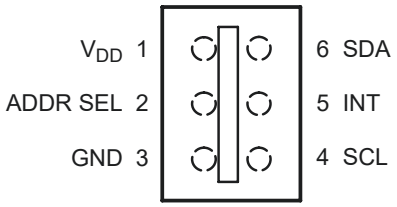

PACKAGE T
6-LEAD TMB
(TOP VIEW)

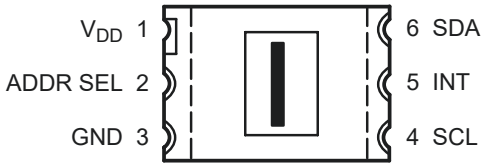

PACKAGE FN
DUAL FLAT NO-LEAD
(TOP VIEW)

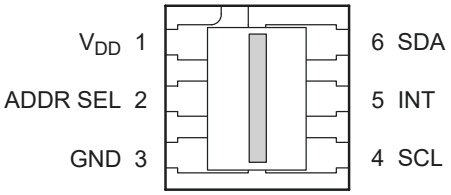

PACKAGE CL
6-LEAD ChipLED
(TOP VIEW)

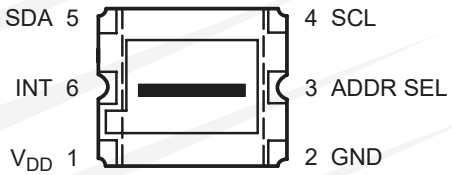

Package Drawings are Not to Scale

Description

The TSL2560 and TSL2561 are light-to-digital converters that transform light intensity to a digital signal output capable of direct I²C (TSL2561) or SMBus (TSL2560) interface. Each device combines one broadband photodiode (visible plus infrared) and one infrared-responding photodiode on a single CMOS integrated circuit capable of providing a near-photopic response over an effective 20-bit dynamic range (16-bit resolution). Two integrating ADCs convert the photodiode currents to a digital output that represents the irradiance measured on each channel. This digital output can be input to a microprocessor where illuminance (ambient light level) in lux is derived using an empirical formula to approximate the human eye response. The TSL2560 device permits an SMB-Alert style interrupt, and the TSL2561 device supports a traditional level style interrupt that remains asserted until the firmware clears it.

While useful for general purpose light sensing applications, the TSL2560/61 devices are designed particularly for display panels (LCD, OLED, etc.) with the purpose of extending battery life and providing optimum viewing in diverse lighting conditions. Display panel backlighting, which can account for up to 30 to 40 percent of total platform power, can be automatically managed. Both devices are also ideal for controlling keyboard illumination based upon ambient lighting conditions. Illuminance information can further be used to manage exposure control in digital cameras. The TSL2560/61 devices are ideal in notebook/tablet PCs, LCD monitors, flat-panel televisions, cell phones, and digital cameras. In addition, other applications include street light control, security lighting, sunlight harvesting, machine vision, and automotive instrumentation clusters.

Copyright © 2009, TAOS Inc.
Texas Advanced Optoelectronic Solutions Inc.
1001 Klein Road • Suite 300 • Plano, TX 75074 • (972) 673-0759
www.taosinc.com

Functional Block Diagram

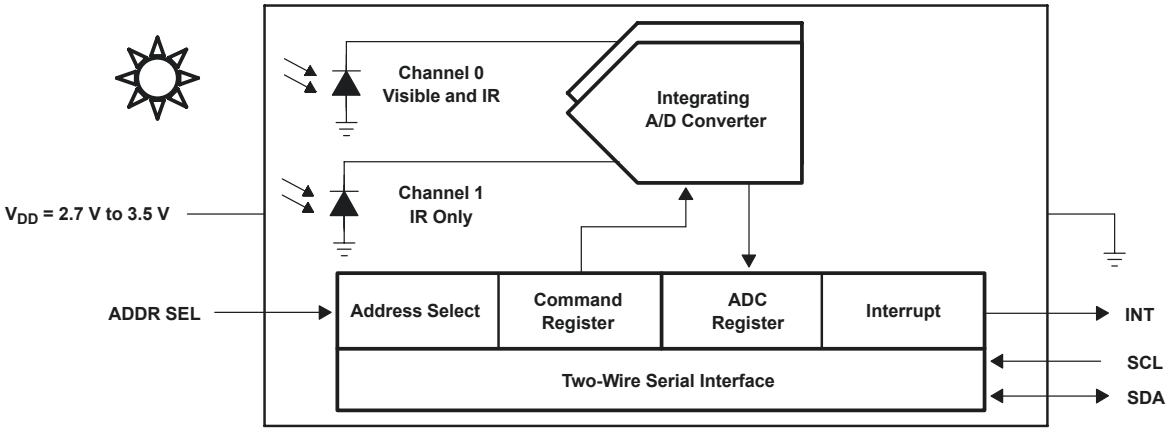

Detailed Description

The TSL2560 and TSL2561 are second-generation ambient light sensor devices. Each contains two integrating analog-to-digital converters (ADC) that integrate currents from two photodiodes. Integration of both channels occurs simultaneously. Upon completion of the conversion cycle, the conversion result is transferred to the Channel 0 and Channel 1 data registers, respectively. The transfers are double-buffered to ensure that the integrity of the data is maintained. After the transfer, the device automatically begins the next integration cycle.

Communication to the device is accomplished through a standard, two-wire SMBus or I^2C serial bus. Consequently, the TSL256x device can be easily connected to a microcontroller or embedded controller. No external circuitry is required for signal conditioning, thereby saving PCB real estate as well. Since the output of the TSL256x device is digital, the output is effectively immune to noise when compared to an analog signal.

The TSL256x devices also support an interrupt feature that simplifies and improves system efficiency by eliminating the need to poll a sensor for a light intensity value. The primary purpose of the interrupt function is to detect a meaningful change in light intensity. The concept of a *meaningful change* can be defined by the user both in terms of light intensity and time, or persistence, of that change in intensity. The TSL256x devices have the ability to define a threshold above and below the current light level. An interrupt is generated when the value of a conversion exceeds either of these limits.

Available Options

DEVICE	INTERFACE	PACKAGE − LEADS	PACKAGE DESIGNATOR	ORDERING NUMBER
TSL2560	SMBus	Chipscale	CS	TSL2560CS
TSL2560	SMBus	TMB-6	T	TSL2560T
TSL2560	SMBus	Dual Flat No-Lead − 6	FN	TSL2560FN
TSL2560	SMBus	ChipLED-6	CL	TSL2560CL
TSL2561	I^2C	Chipscale	CS	TSL2561CS
TSL2561	I^2C	TMB-6	T	TSL2561T
TSL2561	I^2C	Dual Flat No-Lead − 6	FN	TSL2561FN
TSL2561	I^2C	ChipLED-6	CL	TSL2561CL

Copyright © 2009, TAOS Inc.

Terminal Functions

TERMINAL NAME	CS, T, FN PKG NO.	CL PKG NO.	TYPE	DESCRIPTION
ADDR SEL	2	3	I	SMBus device select — three-state
GND	3	2		Power supply ground. All voltages are referenced to GND.
INT	5	6	O	Level or SMB Alert interrupt — open drain.
SCL	4	4	I	SMBus serial clock input terminal — clock signal for SMBus serial data.
SDA	6	5	I/O	SMBus serial data I/O terminal — serial data I/O for SMBus.
V_{DD}	1	1		Supply voltage.

Absolute Maximum Ratings over operating free-air temperature range (unless otherwise noted)†

Supply voltage, V_{DD} (see Note 1) . . . . . 3.8 V
Digital output voltage range, V_O . . . . . −0.5 V to 3.8 V
Digital output current, I_O . . . . . −1 mA to 20 mA
Storage temperature range, T_{stg} . . . . . −40°C to 85°C
ESD tolerance, human body model . . . . . 2000 V

† Stresses beyond those listed under “absolute maximum ratings” may cause permanent damage to the device. These are stress ratings only, and functional operation of the device at these or any other conditions beyond those indicated under “recommended operating conditions” is not implied. Exposure to absolute-maximum-rated conditions for extended periods may affect device reliability.

NOTE 1: All voltages are with respect to GND.

Recommended Operating Conditions

	MIN	NOM	MAX	UNIT
Supply voltage, V_{DD}	2.7	3	3.6	V
Operating free-air temperature, T_A	−30		70	°C
SCL, SDA input low voltage, V_{IL}	−0.5		0.8	V
SCL, SDA input high voltage, V_{IH}	2.1		3.6	V

Electrical Characteristics over recommended operating free-air temperature range (unless otherwise noted)

PARAMETER		TEST CONDITIONS	MIN	TYP	MAX	UNIT
I_{DD}	Supply current	Active		0.24	0.6	mA
		Power down		3.2	15	µA
V_{OL}	INT, SDA output low voltage	3 mA sink current	0		0.4	V
		6 mA sink current	0		0.6	V
I_{LEAK}	Leakage current		−5		5	µA

Copyright © 2009, TAOS Inc.

Operating Characteristics, High Gain (16×), V_{DD} = 3 V, T_A = 25°C, (unless otherwise noted) (see Notes 2, 3, 4, 5)

PARAMETER		TEST CONDITIONS	CHANNEL	TSL2560T, FN, & CL TSL2561T, FN & CL			TSL2560CS, TSL2561CS			UNIT
				MIN	TYP	MAX	MIN	TYP	MAX	
f_{osc}	Oscillator frequency			690	735	780	690	735	780	kHz
	Dark ADC count value	E_e = 0, T_{int} = 402 ms	Ch0	0		4	0		4	counts
			Ch1	0		4	0		4	
	Full scale ADC count value (Note 6)	T_{int} > 178 ms	Ch0			65535			65535	counts
			Ch1			65535			65535	
		T_{int} = 101 ms	Ch0			37177			37177	
			Ch1			37177			37177	
		T_{int} = 13.7 ms	Ch0			5047			5047	
			Ch1			5047			5047	
	ADC count value	λ_p = 640 nm, T_{int} = 101 ms E_e = 36.3 µW/cm^2	Ch0	750	1000	1250				counts
			Ch1		200					
		λ_p = 940 nm, T_{int} = 101 ms E_e = 119 µW/cm^2	Ch0	700	1000	1300				
			Ch1		820					
		λ_p = 640 nm, T_{int} = 101 ms E_e = 41 µW/cm^2	Ch0				750	1000	1250	counts
			Ch1					190		
		λ_p = 940 nm, T_{int} = 101 ms E_e = 135 µW/cm^2	Ch0				700	1000	1300	
			Ch1					850		
	ADC count value ratio: Ch1/Ch0	λ_p = 640 nm, T_{int} = 101 ms		0.15	0.20	0.25	0.14	0.19	0.24	
		λ_p = 940 nm, T_{int} = 101 ms		0.69	0.82	0.95	0.70	0.85	1	
R_e	Irradiance responsivity	λ_p = 640 nm, T_{int} = 101 ms	Ch0		27.5			24.4		counts/ (µW/ cm^2)
			Ch1		5.5			4.6		
		λ_p = 940 nm, T_{int} = 101 ms	Ch0		8.4			7.4		
			Ch1		6.9			6.3		
R_v	Illuminance responsivity	Fluorescent light source: T_{int} = 402 ms	Ch0		36			35		counts/ lux
			Ch1		4			3.8		
		Incandescent light source: T_{int} = 402 ms	Ch0		144			129		
			Ch1		72			67		
	ADC count value ratio: Ch1/Ch0	Fluorescent light source: T_{int} = 402 ms			0.11			0.11		
		Incandescent light source: T_{int} = 402 ms			0.5			0.52		
R_v	Illuminance responsivity, low gain mode (Note 7)	Fluorescent light source: T_{int} = 402 ms	Ch0		2.3			2.2		counts/ lux
			Ch1		0.25			0.24		
		Incandescent light source: T_{int} = 402 ms	Ch0		9			8.1		
			Ch1		4.5			4.2		
	(Sensor Lux) / (actual Lux), high gain mode (Note 8)	Fluorescent light source: T_{int} = 402 ms		0.65	1	1.35	0.65	1	1.35	
		Incandescent light source: T_{int} = 402 ms		0.60	1	1.40	0.60	1	1.40	

Copyright © 2009, TAOS Inc.

NOTES:

2. Optical measurements are made using small-angle incident radiation from light-emitting diode optical sources. Visible 640 nm LEDs and infrared 940 nm LEDs are used for final product testing for compatibility with high-volume production.
3. The 640 nm irradiance E_e is supplied by an AlInGaP light-emitting diode with the following characteristics: peak wavelength λp = 640 nm and spectral halfwidth $\Delta\lambda ½$ = 17 nm.
4. The 940 nm irradiance E_e is supplied by a GaAs light-emitting diode with the following characteristics: peak wavelength λp = 940 nm and spectral halfwidth $\Delta\lambda ½$ = 40 nm.
5. Integration time T_{int}, is dependent on internal oscillator frequency (f_{osc}) and on the integration field value in the timing register as described in the *Register Set* section. For nominal f_{osc} = 735 kHz, nominal T_{int} = (number of clock cycles)/f_{osc}.
   Field value 00: $T_{int} = (11 \times 918)/f_{osc}$ = 13.7 ms
   Field value 01: $T_{int} = (81 \times 918)/f_{osc}$ = 101 ms
   Field value 10: $T_{int} = (322 \times 918)/f_{osc}$ = 402 ms
   Scaling between integration times vary proportionally as follows: 11/322 = 0.034 (field value 00), 81/322 = 0.252 (field value 01), and 322/322 = 1 (field value 10).
6. Full scale ADC count value is limited by the fact that there is a maximum of one count per two oscillator frequency periods and also by a 2-count offset.
   Full scale ADC count value = ((number of clock cycles)/2 − 2)
   Field value 00: Full scale ADC count value = $((11 \times 918)/2 - 2)$ = 5047
   Field value 01: Full scale ADC count value = $((81 \times 918)/2 - 2)$ = 37177
   Field value 10: Full scale ADC count value = 65535, which is limited by 16 bit register. This full scale ADC count value is reached for 131074 clock cycles, which occurs for T_{int} = 178 ms for nominal f_{osc} = 735 kHz.
7. Low gain mode has 16× lower gain than high gain mode: (1/16 = 0.0625).
8. The sensor Lux is calculated using the empirical formula shown on p. 22 of this data sheet based on measured Ch0 and Ch1 ADC count values for the light source specified. Actual Lux is obtained with a commercial luxmeter. The range of the (sensor Lux) / (actual Lux) ratio is estimated based on the variation of the 640 nm and 940 nm optical parameters. Devices are not 100% tested with fluorescent or incandescent light sources.

Copyright © 2009, TAOS Inc.

AC Electrical Characteristics, V_{DD} = 3 V, T_A = 25°C (unless otherwise noted)

PARAMETER†		TEST CONDITIONS	MIN	TYP	MAX	UNIT
$t_{(CONV)}$	Conversion time		12	100	400	ms
$f_{(SCL)}$	Clock frequency (I^2C only)		0		400	kHz
	Clock frequency (SMBus only)		10		100	kHz
$t_{(BUF)}$	Bus free time between start and stop condition		1.3			µs
$t_{(HDSTA)}$	Hold time after (repeated) start condition. After this period, the first clock is generated.		0.6			µs
$t_{(SUSTA)}$	Repeated start condition setup time		0.6			µs
$t_{(SUSTO)}$	Stop condition setup time		0.6			µs
$t_{(HDDAT)}$	Data hold time		0		0.9	µs
$t_{(SUDAT)}$	Data setup time		100			ns
$t_{(LOW)}$	SCL clock low period		1.3			µs
$t_{(HIGH)}$	SCL clock high period		0.6			µs
$t_{(TIMEOUT)}$	Detect clock/data low timeout (SMBus only)		25		35	ms
t_F	Clock/data fall time				300	ns
t_R	Clock/data rise time				300	ns
C_i	Input pin capacitance				10	pF

† Specified by design and characterization; not production tested.

Copyright © 2009, TAOS Inc.

PARAMETER MEASUREMENT INFORMATION

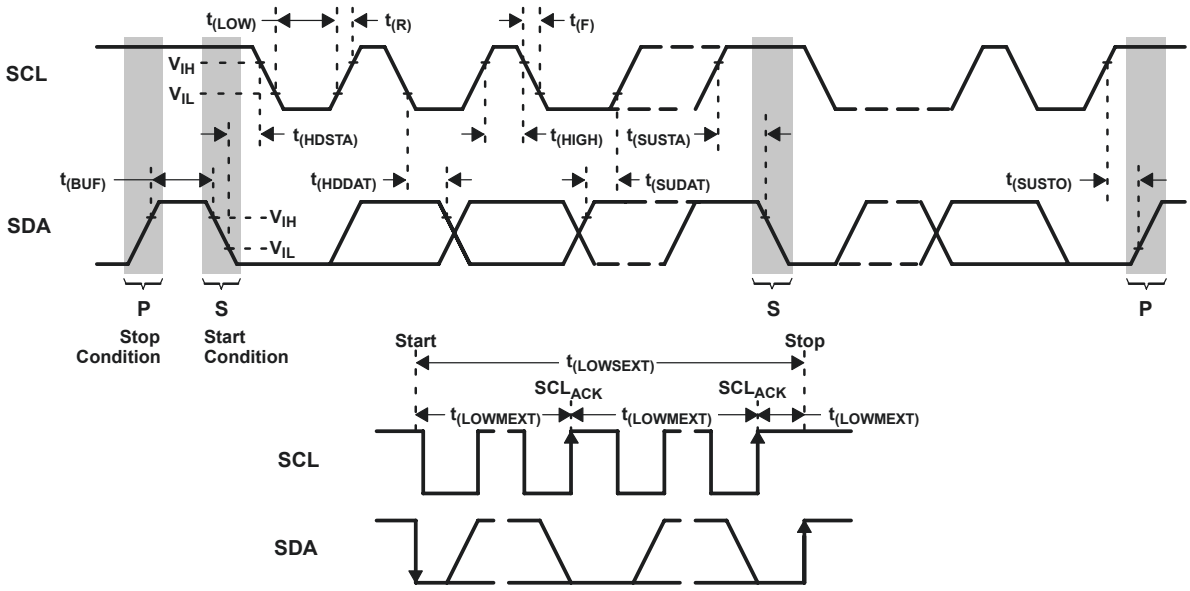

Figure 1. Timing Diagrams

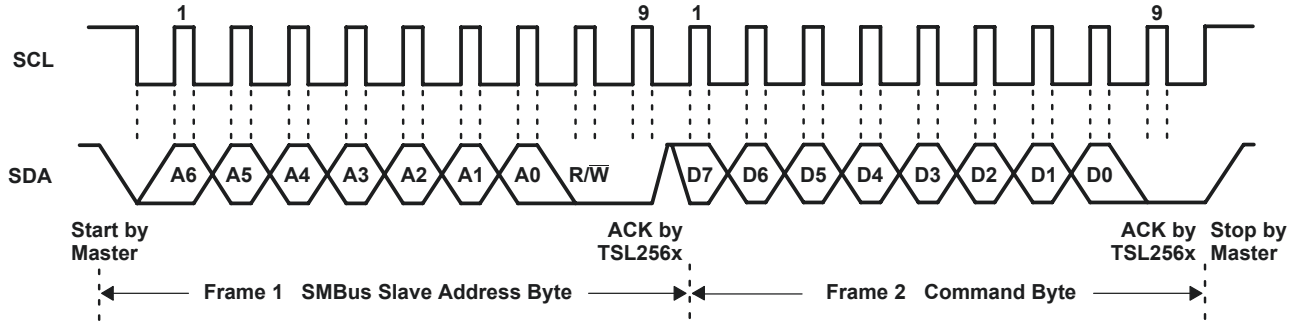

Figure 2. Example Timing Diagram for SMBus Send Byte Format

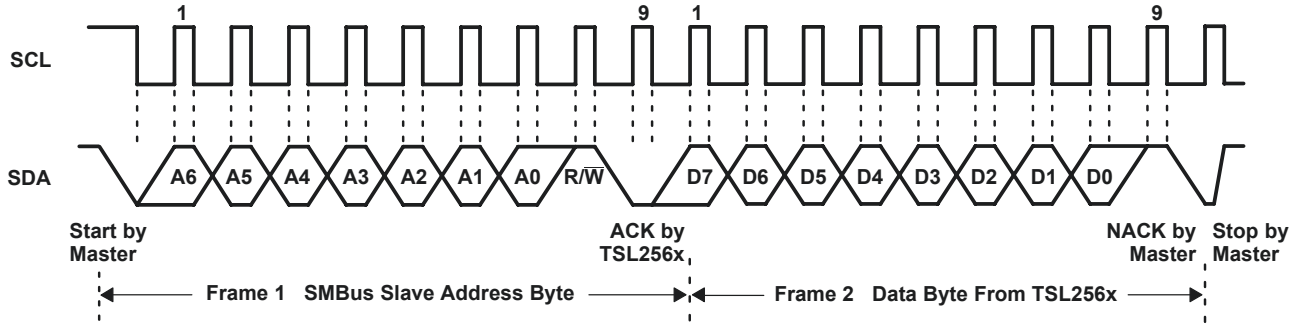

Figure 3. Example Timing Diagram for SMBus Receive Byte Format

Copyright © 2009, TAOS Inc.

TYPICAL CHARACTERISTICS

SPECTRAL RESPONSIVITY

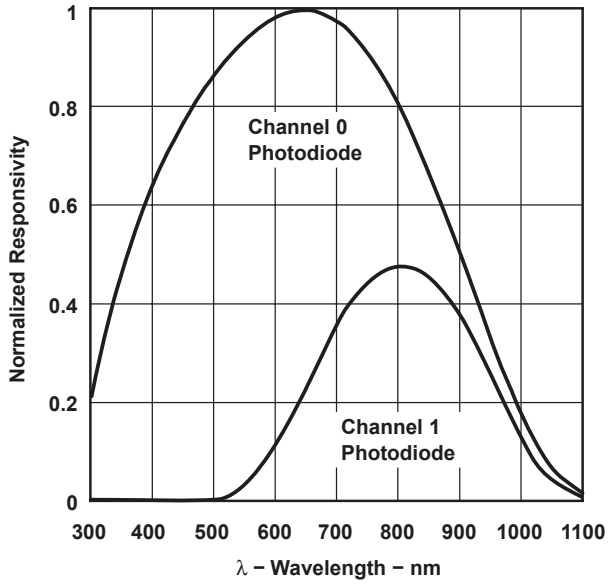

Figure 4

NORMALIZED RESPONSIVITY vs. ANGULAR DISPLACEMENT — CS PACKAGE

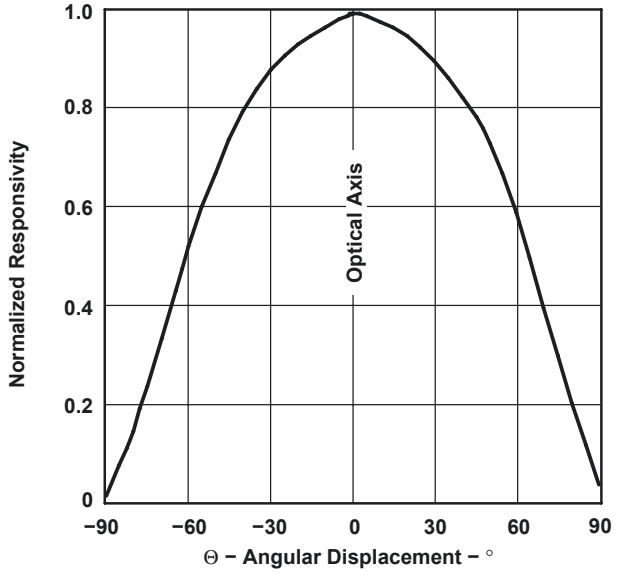

Figure 5

NORMALIZED RESPONSIVITY vs. ANGULAR DISPLACEMENT — T PACKAGE

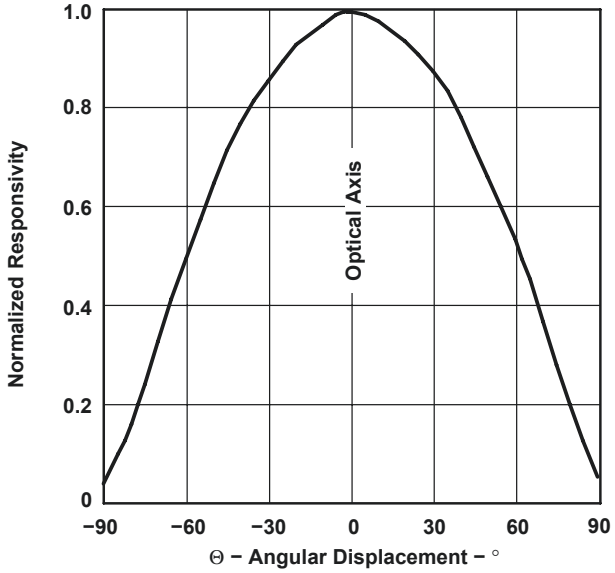

Figure 6

Copyright © 2009, TAOS Inc.

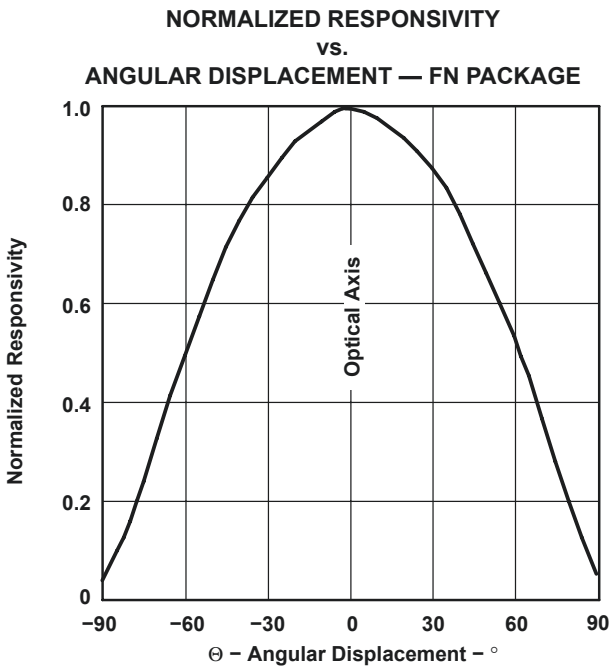

Figure 7

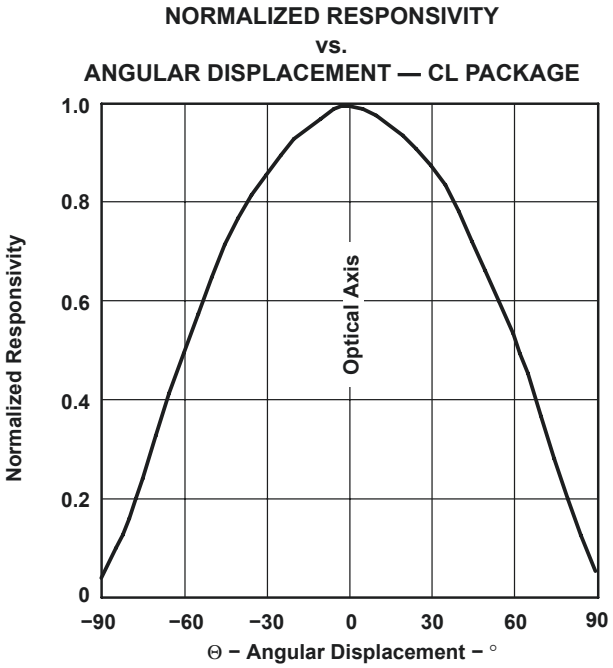

Figure 8

Copyright © 2009, TAOS Inc.

PRINCIPLES OF OPERATION

Analog-to-Digital Converter

The TSL256x contains two integrating analog-to-digital converters (ADC) that integrate the currents from the channel 0 and channel 1 photodiodes. Integration of both channels occurs simultaneously, and upon completion of the conversion cycle the conversion result is transferred to the channel 0 and channel 1 data registers, respectively. The transfers are double buffered to ensure that invalid data is not read during the transfer. After the transfer, the device automatically begins the next integration cycle.

Digital Interface

Interface and control of the TSL256x is accomplished through a two-wire serial interface to a set of registers that provide access to device control functions and output data. The serial interface is compatible with System Management Bus (SMBus) versions 1.1 and 2.0, and I^2C bus Fast-Mode. The TSL256x offers three slave addresses that are selectable via an external pin (ADDR SEL). The slave address options are shown in Table 1.

Table 1. Slave Address Selection

ADDR SEL TERMINAL LEVEL	SLAVE ADDRESS	SMB ALERT ADDRESS
GND	0101001	0001100
Float	0111001	0001100
VDD	1001001	0001100

NOTE: The Slave and SMB Alert Addresses are 7 bits. Please note the SMBus and I^2C protocols on pages 9 through 12. A read/write bit should be appended to the slave address by the master device to properly communicate with the TSL256X device.

SMBus and I^2C Protocols

Each *Send* and *Write* protocol is, essentially, a series of bytes. A byte sent to the TSL256x with the most significant bit (MSB) equal to 1 will be interpreted as a COMMAND byte. The lower four bits of the COMMAND byte form the register select address (see Table 2), which is used to select the destination for the subsequent byte(s) received. The TSL256x responds to any Receive Byte requests with the contents of the register specified by the stored register select address.

The TSL256X implements the following protocols of the SMB 2.0 specification:

- Send Byte Protocol
- Receive Byte Protocol
- Write Byte Protocol
- Write Word Protocol
- Read Word Protocol
- Block Write Protocol
- Block Read Protocol

The TSL256X implements the following protocols of the Philips Semiconductor I^2C specification:

- I^2C Write Protocol
- I^2C Read (Combined Format) Protocol

Copyright © 2009, TAOS Inc.

When an SMBus Block Write or Block Read is initiated (see description of COMMAND Register), the byte following the COMMAND byte is ignored but is a requirement of the SMBus specification. This field contains the byte count (i.e. the number of bytes to be transferred). The TSL2560 (SMBus) device ignores this field and extracts this information by counting the actual number of bytes transferred before the Stop condition is detected.

When an I^2C Write or I^2C Read (Combined Format) is initiated, the byte count is also ignored but follows the SMBus protocol specification. Data bytes continue to be transferred from the TSL2561 (I^2C) device to Master until a NACK is sent by the Master.

The data formats supported by the TSL2560 and TSL2561 devices are:

- Master transmitter transmits to slave receiver (SMBus and I^2C):
  - The transfer direction in this case is not changed.
- Master reads slave immediately after the first byte (SMBus only):
  - At the moment of the first acknowledgment (provided by the slave receiver) the master transmitter becomes a master receiver and the slave receiver becomes a slave transmitter.
- Combined format (SMBus and I^2C):
  - During a change of direction within a transfer, the master repeats both a START condition and the slave address but with the R/W bit reversed. In this case, the master receiver terminates the transfer by generating a NACK on the last byte of the transfer and a STOP condition.

For a complete description of SMBus protocols, please review the SMBus Specification at http://www.smbus.org/specs. For a complete description of I^2C protocols, please review the I^2C Specification at http://www.semiconductors.philips.com.

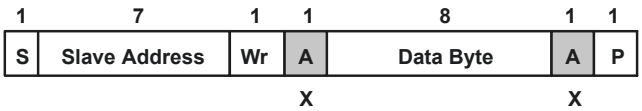

A	Acknowledge (this bit position may be 0 for an ACK or 1 for a NACK)
P	Stop Condition
Rd	Read (bit value of 1)
S	Start Condition
Sr	Repeated Start Condition
Wr	Write (bit value of 0)
X	Shown under a field indicates that that field is required to have a value of X
...	Continuation of protocol
□	Master-to-Slave
■	Slave-to-Master

Figure 9. SMBus and I^2C Packet Protocol Element Key

Copyright © 2009, TAOS Inc.

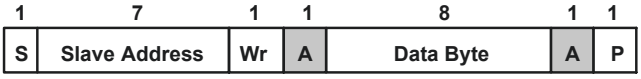

Figure 10. SMBus Send Byte Protocol

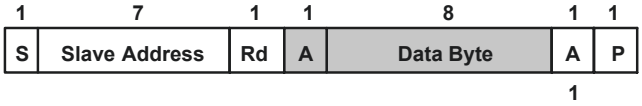

Figure 11. SMBus Receive Byte Protocol

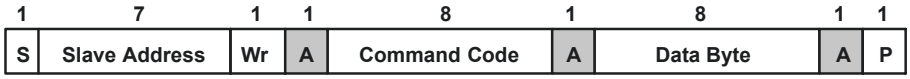

Figure 12. SMBus Write Byte Protocol

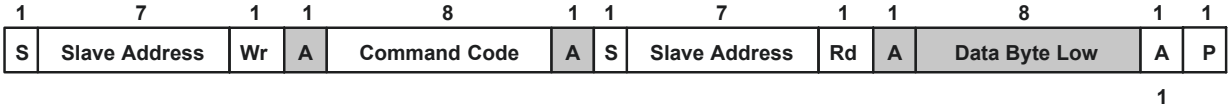

Figure 13. SMBus Read Byte Protocol

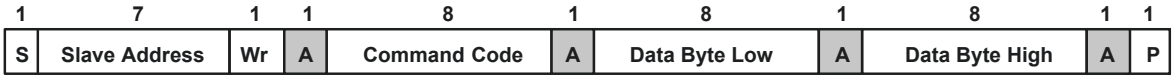

Figure 14. SMBus Write Word Protocol

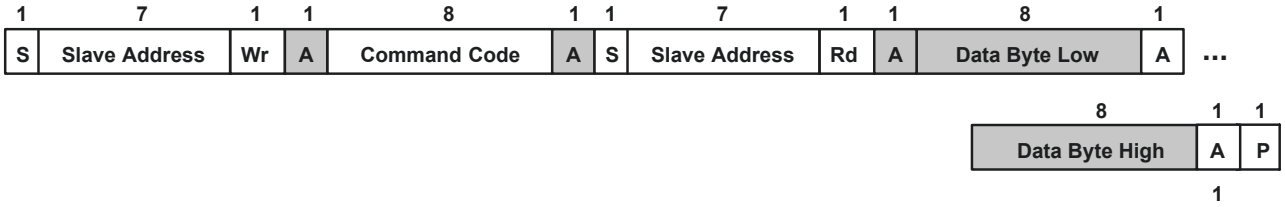

Figure 15. SMBus Read Word Protocol

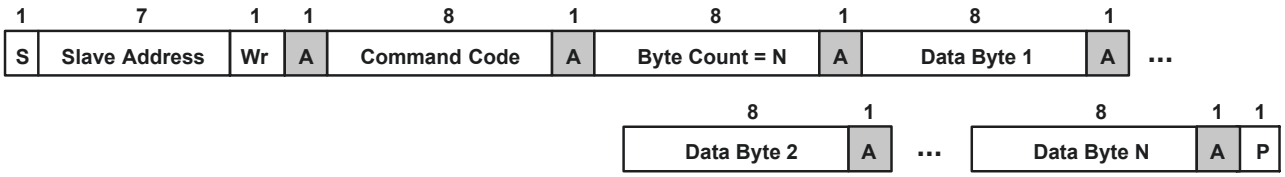

Figure 16. SMBus Block Write or I²C Write Protocols

NOTE: The I²C write protocol does not use the Byte Count packet, and the Master will continue sending Data Bytes until the Master initiates a Stop condition. See the Command Register on page 13 for additional information regarding the Block Read/Write protocol.

Figure 17. SMBus Block Read or I²C Read (Combined Format) Protocols

NOTE: The I²C read protocol does not use the Byte Count packet, and the Master will continue receiving Data Bytes until the Master initiates a Stop Condition. See the Command Register on page 13 for additional information regarding the Block Read/Write protocol.

Register Set

The TSL256x is controlled and monitored by sixteen registers (three are reserved) and a command register accessed through the serial interface. These registers provide for a variety of control functions and can be read to determine results of the ADC conversions. The register set is summarized in Table 2.

Table 2. Register Address

ADDRESS	RESISTER NAME	REGISTER FUNCTION
−−	COMMAND	Specifies register address
0h	CONTROL	Control of basic functions
1h	TIMING	Integration time/gain control
2h	THRESHLOWLOW	Low byte of low interrupt threshold
3h	THRESHLOWHIGH	High byte of low interrupt threshold
4h	THRESHHIGHLOW	Low byte of high interrupt threshold
5h	THRESHHIGHHIGH	High byte of high interrupt threshold
6h	INTERRUPT	Interrupt control
7h	−−	Reserved
8h	CRC	Factory test — not a user register
9h	−−	Reserved
Ah	ID	Part number/ Rev ID
Bh	−−	Reserved
Ch	DATA0LOW	Low byte of ADC channel 0
Dh	DATA0HIGH	High byte of ADC channel 0
Eh	DATA1LOW	Low byte of ADC channel 1
Fh	DATA1HIGH	High byte of ADC channel 1

The mechanics of accessing a specific register depends on the specific SMB protocol used. Refer to the section on SMBus protocols. In general, the COMMAND register is written first to specify the specific control/status register for following read/write operations.

Copyright © 2009, TAOS Inc.

Command Register

The command register specifies the address of the target register for subsequent read and write operations. The Send Byte protocol is used to configure the COMMAND register. The command register contains eight bits as described in Table 3. The command register defaults to 00h at power on.

Table 3. Command Register

	7	6	5	4	3	2	1	0	
	CMD	CLEAR	WORD	BLOCK	ADDRESS				COMMAND
Reset Value:	0	0	0	0	0	0	0	0	

FIELD	BIT	DESCRIPTION
CMD	7	Select command register. Must write as 1.
CLEAR	6	Interrupt clear. Clears any pending interrupt. This bit is a write-one-to-clear bit. It is self clearing.
WORD	5	SMB Write/Read Word Protocol. 1 indicates that this SMB transaction is using either the SMB Write Word or Read Word protocol.
BLOCK	4	Block Write/Read Protocol. 1 indicates that this transaction is using either the Block Write or the Block Read protocol. See Note below.
ADDRESS	3:0	Register Address. This field selects the specific control or status register for following write and read commands according to Table 2.

NOTE: An I^2C block transaction will continue until the Master sends a stop condition. See Figure 16 and Figure 17. Unlike the I2C protocol, the SMBus read/write protocol requires a Byte Count. All four ADC Channel Data Registers (Ch through Fh) can be read simultaneously in a single SMBus transaction. This is the only 32-bit data block supported by the TSL2560 SMBus protocol. The BLOCK bit must be set to 1, and a read condition should be initiated with a COMMAND CODE of 9Bh. By using a COMMAND CODE of 9Bh during an SMBus Block Read Protocol, the TSL2560 device will automatically insert the appropriate Byte Count (Byte Count = 4) as illustrated in Figure 17. A write condition should not be used in conjunction with the Bh register.

Control Register (0h)

The CONTROL register contains two bits and is primarily used to power the TSL256x device up and down as shown in Table 4.

Table 4. Control Register

	7	6	5	4	3	2	1	0	
0h	Resv	Resv	Resv	Resv	Resv	Resv	POWER		CONTROL
Reset Value:	0	0	0	0	0	0	0	0	

FIELD	BIT	DESCRIPTION
Resv	7:2	Reserved. Write as 0.
POWER	1:0	Power up/power down. By writing a 03h to this register, the device is powered up. By writing a 00h to this register, the device is powered down. ***NOTE:*** *If a value of 03h is written, the value returned during a read cycle will be 03h. This feature can be used to verify that the device is communicating properly.*

Copyright © 2009, TAOS Inc.

Timing Register (1h)

The TIMING register controls both the integration time and the gain of the ADC channels. A common set of control bits is provided that controls both ADC channels. The TIMING register defaults to 02h at power on.

Table 5. Timing Register

	7	6	5	4	3	2	1	0	
1h	Resv	Resv	Resv	GAIN	Manual	Resv	INTEG		TIMING
Reset Value:	0	0	0	0	0	0	1	0	

FIELD	BIT	DESCRIPTION
Resv	7−5	Reserved. Write as 0.
GAIN	4	Switches gain between low gain and high gain modes. Writing a 0 selects low gain (1×); writing a 1 selects high gain (16×).
Manual	3	Manual timing control. Writing a 1 begins an integration cycle. Writing a 0 stops an integration cycle. ***NOTE:*** *This field only has meaning when INTEG = 11. It is ignored at all other times.*
Resv	2	Reserved. Write as 0.
INTEG	1:0	Integrate time. This field selects the integration time for each conversion.

Integration time is dependent on the INTEG FIELD VALUE and the internal clock frequency. Nominal integration times and respective scaling between integration times scale proportionally as shown in Table 6. See Note 5 and Note 6 on page 5 for detailed information regarding how the scale values were obtained; see page 22 for further information on how to calculate lux.

Table 6. Integration Time

INTEG FIELD VALUE	SCALE	NOMINAL INTEGRATION TIME
00	0.034	13.7 ms
01	0.252	101 ms
10	1	402 ms
11	−−	N/A

The manual timing control feature is used to manually start and stop the integration time period. If a particular integration time period is required that is not listed in Table 6, then this feature can be used. For example, the manual timing control can be used to synchronize the TSL256x device with an external light source (e.g. LED). A start command to begin integration can be initiated by writing a 1 to this bit field. Correspondingly, the integration can be stopped by simply writing a 0 to the same bit field.

Interrupt Threshold Register (2h − 5h)

The interrupt threshold registers store the values to be used as the high and low trigger points for the comparison function for interrupt generation. If the value generated by channel 0 crosses below or is equal to the low threshold specified, an interrupt is asserted on the interrupt pin. If the value generated by channel 0 crosses above the high threshold specified, an interrupt is asserted on the interrupt pin. Registers THRESHLOWLOW and THRESHLOWHIGH provide the low byte and high byte, respectively, of the lower interrupt threshold. Registers THRESHHIGHLOW and THRESHHIGHHIGH provide the low and high bytes, respectively, of the upper interrupt threshold. The high and low bytes from each set of registers are combined to form a 16-bit threshold value. The interrupt threshold registers default to 00h on power up.

Copyright © 2009, TAOS Inc.

Table 7. Interrupt Threshold Register

REGISTER	ADDRESS	BITS	DESCRIPTION
THRESHLOWLOW	2h	7:0	ADC channel 0 lower byte of the low threshold
THRESHLOWHIGH	3h	7:0	ADC channel 0 upper byte of the low threshold
THRESHHIGHLOW	4h	7:0	ADC channel 0 lower byte of the high threshold
THRESHHIGHHIGH	5h	7:0	ADC channel 0 upper byte of the high threshold

NOTE: Since two 8-bit values are combined for a single 16-bit value for each of the high and low interrupt thresholds, the Send Byte protocol should not be used to write to these registers. Any values transferred by the Send Byte protocol with the MSB set would be interpreted as the COMMAND field and stored as an address for subsequent read/write operations and not as the interrupt threshold information as desired. The Write Word protocol should be used to write byte-paired registers. For example, the THRESHLOWLOW and THRESHLOWHIGH registers (as well as the THRESHHIGHLOW and THRESHHIGHHIGH registers) can be written together to set the 16-bit ADC value in a single transaction.

Interrupt Control Register (6h)

The INTERRUPT register controls the extensive interrupt capabilities of the TSL256x. The TSL256x permits both SMB-Alert style interrupts as well as traditional level-style interrupts. The interrupt persist bit field (PERSIST) provides control over when interrupts occur. A value of 0 causes an interrupt to occur after every integration cycle regardless of the threshold settings. A value of 1 results in an interrupt after one integration time period outside the threshold window. A value of *N* (where *N* is 2 through15) results in an interrupt only if the value remains outside the threshold window for *N* consecutive integration cycles. For example, if *N* is equal to 10 and the integration time is 402 ms, then the total time is approximately 4 seconds.

When a level Interrupt is selected, an interrupt is generated whenever the last conversion results in a value outside of the programmed threshold window. The interrupt is active-low and remains asserted until cleared by writing the COMMAND register with the CLEAR bit set.

In SMBAlert mode, the interrupt is similar to the traditional level style and the interrupt line is asserted low. To clear the interrupt, the host responds to the SMBAlert by performing a modified Receive Byte operation, in which the Alert Response Address (ARA) is placed in the slave address field, and the TSL256x that generated the interrupt responds by returning its own address in the seven most significant bits of the receive data byte. If more than one device connected on the bus has pulled the SMBAlert line low, the highest priority (lowest address) device will win communication rights via standard arbitration during the slave address transfer. If the device loses this arbitration, the interrupt will not be cleared. The Alert Response Address is 0Ch.

When INTR = 11, the interrupt is generated immediately following the SMBus write operation. Operation then behaves in an SMBAlert mode, and the *software set* interrupt may be cleared by an SMBAlert cycle.

NOTE: Interrupts are based on the value of Channel 0 only.

Table 8. Interrupt Control Register

	7	6	5	4	3	2	1	0	
6h	Resv	Resv	INTR		PERSIST				INTERRUPT
Reset Value:	0	0	0	0	0	0	0	0	

FIELD	BITS	DESCRIPTION
Resv	7:6	Reserved. Write as 0.
INTR	5:4	INTR Control Select. This field determines mode of interrupt logic according to Table 9, below.
PERSIST	3:0	Interrupt persistence. Controls rate of interrupts to the host processor as shown in Table 10, below.

Copyright © 2009, TAOS Inc.

Table 9. Interrupt Control Select

INTR FIELD VALUE	READ VALUE
00	Interrupt output disabled
01	Level Interrupt
10	SMBAlert compliant
11	Test Mode: Sets interrupt and functions as mode 10

NOTE: Field value of 11 may be used to test interrupt connectivity in a system or to assist in debugging interrupt service routine software.

Table 10. Interrupt Persistence Select

PERSIST FIELD VALUE	INTERRUPT PERSIST FUNCTION
0000	Every ADC cycle generates interrupt
0001	Any value outside of threshold range
0010	2 integration time periods out of range
0011	3 integration time periods out of range
0100	4 integration time periods out of range
0101	5 integration time periods out of range
0110	6 integration time periods out of range
0111	7 integration time periods out of range
1000	8 integration time periods out of range
1001	9 integration time periods out of range
1010	10 integration time periods out of range
1011	11 integration time periods out of range
1100	12 integration time periods out of range
1101	13 integration time periods out of range
1110	14 integration time periods out of range
1111	15 integration time periods out of range

ID Register (Ah)

The ID register provides the value for both the part number and silicon revision number for that part number. It is a read-only register, whose value never changes.

Table 11. ID Register

	7	6	5	4	3	2	1	0	
Ah	PARTNO				REVNO				ID
Reset Value:	–	–	–	–	–	–	–	–	

FIELD	BITS	DESCRIPTION
PARTNO	7:4	Part Number Identification: field value 0000 = TSL2560, field value 0001 = TSL2561
REVNO	3:0	Revision number identification

Copyright © 2009, TAOS Inc.

ADC Channel Data Registers (Ch − Fh)

The ADC channel data are expressed as 16-bit values spread across two registers. The ADC channel 0 data registers, DATA0LOW and DATA0HIGH provide the lower and upper bytes, respectively, of the ADC value of channel 0. Registers DATA1LOW and DATA1HIGH provide the lower and upper bytes, respectively, of the ADC value of channel 1. All channel data registers are read-only and default to 00h on power up.

Table 12. ADC Channel Data Registers

REGISTER	ADDRESS	BITS	DESCRIPTION
DATA0LOW	Ch	7:0	ADC channel 0 lower byte
DATA0HIGH	Dh	7:0	ADC channel 0 upper byte
DATA1LOW	Eh	7:0	ADC channel 1 lower byte
DATA1HIGH	Fh	7:0	ADC channel 1 upper byte

The upper byte data registers can only be read following a read to the corresponding lower byte register. When the lower byte register is read, the upper eight bits are strobed into a shadow register, which is read by a subsequent read to the upper byte. The upper register will read the correct value even if additional ADC integration cycles end between the reading of the lower and upper registers.

NOTE: The Read Word protocol can be used to read byte-paired registers. For example, the DATA0LOW and DATA0HIGH registers (as well as the DATA1LOW and DATA1HIGH registers) may be read together to obtain the 16-bit ADC value in a single transaction

Copyright © 2009, TAOS Inc.

APPLICATION INFORMATION: SOFTWARE

Basic Operation

After applying V_{DD}, the device will initially be in the power-down state. To operate the device, issue a command to access the CONTROL register followed by the data value 03h to power up the device. At this point, both ADC channels will begin a conversion at the default integration time of 400 ms. After 400 ms, the conversion results will be available in the DATA0 and DATA1 registers. Use the following pseudo code to read the data registers:

```
// Read ADC Channels Using Read Word Protocol - RECOMMENDED
       Address = 0x39                            //Slave addr - also 0x29 or 0x49

       //Address the Ch0 lower data register and configure for Read Word
       Command = 0xAC                            //Set Command bit and Word bit

       //Reads two bytes from sequential registers 0x0C and 0x0D
       //Results are returned in DataLow and DataHigh variables
       ReadWord (Address, Command, DataLow, DataHigh)
       Channel0 = 256 * DataHigh + DataLow

       //Address the Ch1 lower data register and configure for Read Word
       Command = 0xAE                            //Set bit fields 7 and 5

       //Reads two bytes from sequential registers 0x0E and 0x0F
       //Results are returned in DataLow and DataHigh variables
       ReadWord (Address, Command, DataLow, DataHigh)
       Channel1 = 256 * DataHigh + DataLow       //Shift DataHigh to upper byte


// Read ADC Channels Using Read Byte Protocol
       Address = 0x39                            //Slave addr - also 0x29 or 0x49
       Command = 0x8C                            //Address the Ch0 lower data register
       ReadByte (Address, Command, DataLow)      //Result returned in DataLow
       Command = 0x8D                            //Address the Ch0 upper data register
       ReadByte (Address, Command, DataHigh)     //Result returned in DataHigh
       Channel0 = 256 * DataHigh + DataLow       //Shift DataHigh to upper byte

       Command = 0x8E                            //Address the Ch1 lower data register
       ReadByte (Address, Command, DataLow)      //Result returned in DataLow
       Command = 0x8F                            //Address the Ch1 upper data register
       ReadByte (Address, Command, DataHigh)     //Result returned in DataHigh
       Channel1 = 256 * DataHigh + DataLow       //Shift DataHigh to upper byte
```


Copyright © 2009, TAOS Inc.

APPLICATION INFORMATION: SOFTWARE

Configuring the Timing Register

The command, timing, and control registers are initialized to default values on power up. Setting these registers to the desired values would be part of a normal initialization or setup procedure. In addition, to maximize the performance of the device under various conditions, the integration time and gain may be changed often during operation. The following pseudo code illustrates a procedure for setting up the timing register for various options:

```
// Set up Timing Register
       //Low Gain (1x), integration time of 402ms (default value)
       Address = 0x39
       Command = 0x81
       Data = 0x02
       WriteByte(Address, Command, Data)

       //Low Gain (1x), integration time of 101ms
       Data = 0x01
       WriteByte(Address, Command, Data)

       //Low Gain (1x), integration time of 13.7ms
       Data = 0x00
       WriteByte(Address, Command, Data)

       //High Gain (16x), integration time of 101ms
       Data = 0x11
       WriteByte(Address, Command, Data)

//Read data registers (see Basic Operation example)


//Perform Manual Integration
       //Set up for manual integration with Gain of 1x
       Data = 0x03
       //Set manual integration mode - device stops converting
       WriteByte(Address, Command, Data)

       //Begin integration period
       Data = 0x0B
       WriteByte(Address, Command, Data)

       //Integrate for 50ms
       Sleep (50)                                //Wait for 50ms

       //Stop integrating
       Data = 0x03
       WriteByte(Address, Command, Data)

//Read data registers (see Basic Operation example)
```

Copyright © 2009, TAOS Inc.

APPLICATION INFORMATION: SOFTWARE

Interrupts

The interrupt feature of the TSL256x device simplifies and improves system efficiency by eliminating the need to poll the sensor for a light intensity value. Interrupt styles are determined by the INTR field in the Interrupt Register. The interrupt feature may be disabled by writing a field value of 00h to the Interrupt Control Register so that polling can be performed.

The versatility of the interrupt feature provides many options for interrupt configuration and usage. The primary purpose of the interrupt function is to provide a meaningful change in light intensity. However, it also be used as an end-of-conversion signal. The concept of a *meaningful change* can be defined by the user both in terms of light intensity and time, or persistence, of that change in intensity. The TSL256x device implements two 16-bit-wide interrupt threshold registers that allow the user to define a threshold above and below the current light level. An interrupt will then be generated when the value of a conversion exceeds either of these limits. For simplicity of programming, the threshold comparison is accomplished only with Channel 0. This simplifies calculation of thresholds that are based, for example, on a percent of the current light level. It is adequate to use only one channel when calculating light intensity differences since, for a given light source, the channel 0 and channel 1 values are linearly proportional to each other and thus both values scale linearly with light intensity.

To further control when an interrupt occurs, the TSL256x device provides an interrupt persistence feature. This feature allows the user to specify a number of conversion cycles for which a light intensity exceeding either interrupt threshold must persist before actually generating an interrupt. This can be used to prevent transient changes in light intensity from generating an unwanted interrupt. With a value of 1, an interrupt occurs immediately whenever either threshold is exceeded. With values of *N*, where *N* can range from 2 to 15, *N* consecutive conversions must result in values outside the interrupt window for an interrupt to be generated. For example, if *N* is equal to 10 and the integration time is 402 ms, then an interrupt will not be generated unless the light level persists for more than 4 seconds outside the threshold.

Two different interrupt styles are available: Level and SMBus Alert. The difference between these two interrupt styles is how they are cleared. Both result in the interrupt line going active low and remaining low until the interrupt is cleared. A level style interrupt is cleared by setting the CLEAR bit (bit 6) in the COMMAND register. The SMBus Alert style interrupt is cleared by an Alert Response as described in the Interrupt Control Register section and SMBus specification.

To configure the interrupt as an end-of-conversion signal, the interrupt PERSIST field is set to 0. Either Level or SMBus Alert style can be used. An interrupt will be generated upon completion of each conversion. The interrupt threshold registers are ignored. The following example illustrates the configuration of a level interrupt:

```
// Set up end-of-conversion interrupt, Level style
       Address = 0x39                              //Slave addr also 0x29 or 0x49
       Command = 0x86                              //Address Interrupt Register
       Data = 0x10                                 //Level style, every ADC cycle
       WriteByte(Address, Command, Data)
```


Copyright © 2009, TAOS Inc.

APPLICATION INFORMATION: SOFTWARE

The following example pseudo code illustrates the configuration of an SMB Alert style interrupt when the light intensity changes 20% from the current value, and persists for 3 conversion cycles:

```
// Read current light level
      Address = 0x39                            //Slave addr also 0x29 or 0x49
      Command = 0xAC                            //Set Command bit and Word bit
      ReadWord (Address, Command, DataLow, DataHigh)
      Channel0 = (256 * DataHigh) + DataLow

      //Calculate upper and lower thresholds
      T_Upper = Channel0 + (0.2 * Channel0)
      T_Lower = Channel0 - (0.2 * Channel0)

      //Write the lower threshold register
      Command = 0xA2                            //Addr lower threshold reg, set Word Bit
      WriteWord (Address, Command, T_Lower.LoByte, T_Lower.HiByte)

      //Write the upper threshold register
      Command = 0xA4                            //Addr upper threshold reg, set Word bit
      WriteWord (Address, Command, T_Upper.LoByte, T_Upper.HiByte)

      //Enable interrupt
      Command = 0x86                            //Address interrupt register
      Data = 0x23                               //SMBAlert style, PERSIST = 3
      WriteByte(Address, Command, Data)
```

In order to generate an interrupt on demand during system test or debug, a test mode (INTR = 11) can be used. The following example illustrates how to generate an interrupt on demand:

```
// Generate an interrupt
      Address = 0x39                            //Slave addr also 0x29 or 0x49
      Command = 0x86                            //Address Interrupt register
      Data = 0x30                               //Test interrupt
      WriteByte(Address, Command, Data)

      //Interrupt line should now be low
```

Copyright © 2009, TAOS Inc.

APPLICATION INFORMATION: SOFTWARE

Calculating Lux

The TSL256x is intended for use in ambient light detection applications such as display backlight control, where adjustments are made to display brightness or contrast based on the brightness of the ambient light, as perceived by the human eye. Conventional silicon detectors respond strongly to infrared light, which the human eye does not see. This can lead to significant error when the infrared content of the ambient light is high, such as with incandescent lighting, due to the difference between the silicon detector response and the brightness perceived by the human eye.

This problem is overcome in the TSL256x through the use of two photodiodes. One of the photodiodes (channel 0) is sensitive to both visible and infrared light, while the second photodiode (channel 1) is sensitive primarily to infrared light. An integrating ADC converts the photodiode currents to digital outputs. Channel 1 digital output is used to compensate for the effect of the infrared component of light on the channel 0 digital output. The ADC digital outputs from the two channels are used in a formula to obtain a value that approximates the human eye response in the commonly used Illuminance unit of Lux:

CS Package

For $0 < CH1/CH0 \leq 0.52$	$Lux = 0.0315 \times CH0 - 0.0593 \times CH0 \times ((CH1/CH0)^{1.4})$
For $0.52 < CH1/CH0 \leq 0.65$	$Lux = 0.0229 \times CH0 - 0.0291 \times CH1$
For $0.65 < CH1/CH0 \leq 0.80$	$Lux = 0.0157 \times CH0 - 0.0180 \times CH1$
For $0.80 < CH1/CH0 \leq 1.30$	$Lux = 0.00338 \times CH0 - 0.00260 \times CH1$
For $CH1/CH0 > 1.30$	$Lux = 0$

T, FN, and CL Package

For $0 < CH1/CH0 \leq 0.50$	$Lux = 0.0304 \times CH0 - 0.062 \times CH0 \times ((CH1/CH0)^{1.4})$
For $0.50 < CH1/CH0 \leq 0.61$	$Lux = 0.0224 \times CH0 - 0.031 \times CH1$
For $0.61 < CH1/CH0 \leq 0.80$	$Lux = 0.0128 \times CH0 - 0.0153 \times CH1$
For $0.80 < CH1/CH0 \leq 1.30$	$Lux = 0.00146 \times CH0 - 0.00112 \times CH1$
For $CH1/CH0 > 1.30$	$Lux = 0$

The formulas shown above were obtained by optical testing with fluorescent and incandescent light sources, and apply only to open-air applications. Optical apertures (e.g. light pipes) will affect the incident light on the device.

Simplified Lux Calculation

Below is the argument and return value including source code (shown on following page) for calculating lux. The source code is intended for embedded and/or microcontroller applications. Two individual code sets are provided, one for the T, FN, and CL packages, and one for the CS package. All floating point arithmetic operations have been eliminated since embedded controllers and microcontrollers generally do not support these types of operations. Since floating point has been removed, scaling must be performed prior to calculating illuminance if the integration time is not 402 ms and/or if the gain is not 16× as denoted in the source code on the following pages. This sequence scales first to mitigate rounding errors induced by decimal math.

```
extern unsigned int CalculateLux(unsigned int iGain, unsigned int tInt, unsigned int
    ch0, unsigned int ch1, int iType)
```


Copyright © 2009, TAOS Inc.

```
//*****************************************************************************
//
//  Copyright © 2004-2005 TAOS, Inc.
//
//  THIS CODE AND INFORMATION IS PROVIDED "AS IS" WITHOUT WARRANTY OF ANY
//  KIND, EITHER EXPRESSED OR IMPLIED, INCLUDING BUT NOT LIMITED TO THE
//  IMPLIED WARRANTIES OF MERCHANTABILITY AND/OR FITNESS FOR A PARTICULAR
//  PURPOSE.
//
//     Module Name:
//           lux.cpp
//
//*****************************************************************************

#define LUX_SCALE   14     // scale by 2^14
#define RATIO_SCALE 9      // scale ratio by 2^9

//-----------------------------------------------------
// Integration time scaling factors
//-----------------------------------------------------

#define CH_SCALE           10     // scale channel values by 2^10
#define CHSCALE_TINT0      0x7517 // 322/11 * 2^CH_SCALE
#define CHSCALE_TINT1      0x0fe7 // 322/81 * 2^CH_SCALE

//-----------------------------------------------------
// T, FN, and CL Package coefficients
//-----------------------------------------------------
// For Ch1/Ch0=0.00 to 0.50
//           Lux/Ch0=0.0304-0.062*((Ch1/Ch0)^1.4)
//           piecewise approximation
//                 For Ch1/Ch0=0.00 to 0.125:
//                       Lux/Ch0=0.0304-0.0272*(Ch1/Ch0)
//
//                 For Ch1/Ch0=0.125 to 0.250:
//                       Lux/Ch0=0.0325-0.0440*(Ch1/Ch0)
//
//                 For Ch1/Ch0=0.250 to 0.375:
//                       Lux/Ch0=0.0351-0.0544*(Ch1/Ch0)
//
//                 For Ch1/Ch0=0.375 to 0.50:
//                       Lux/Ch0=0.0381-0.0624*(Ch1/Ch0)
//
// For Ch1/Ch0=0.50 to 0.61:
//           Lux/Ch0=0.0224-0.031*(Ch1/Ch0)
//
// For Ch1/Ch0=0.61 to 0.80:
//           Lux/Ch0=0.0128-0.0153*(Ch1/Ch0)
//
// For Ch1/Ch0=0.80 to 1.30:
//           Lux/Ch0=0.00146-0.00112*(Ch1/Ch0)
//
// For Ch1/Ch0>1.3:
//           Lux/Ch0=0
//-----------------------------------------------------
#define K1T  0x0040       // 0.125 * 2^RATIO_SCALE
#define B1T  0x01f2       // 0.0304 * 2^LUX_SCALE
#define M1T  0x01be       // 0.0272 * 2^LUX_SCALE

#define K2T  0x0080       // 0.250 * 2^RATIO_SCALE
```

```
#define B2T   0x0214        // 0.0325 * 2^LUX_SCALE
#define M2T   0x02d1        // 0.0440 * 2^LUX_SCALE

#define K3T   0x00c0        // 0.375 * 2^RATIO_SCALE
#define B3T   0x023f        // 0.0351 * 2^LUX_SCALE
#define M3T   0x037b        // 0.0544 * 2^LUX_SCALE

#define K4T   0x0100        // 0.50 * 2^RATIO_SCALE
#define B4T   0x0270        // 0.0381 * 2^LUX_SCALE
#define M4T   0x03fe        // 0.0624 * 2^LUX_SCALE
#define K5T   0x0138        // 0.61 * 2^RATIO_SCALE
#define B5T   0x016f        // 0.0224 * 2^LUX_SCALE
#define M5T   0x01fc        // 0.0310 * 2^LUX_SCALE

#define K6T   0x019a        // 0.80 * 2^RATIO_SCALE
#define B6T   0x00d2        // 0.0128 * 2^LUX_SCALE
#define M6T   0x00fb        // 0.0153 * 2^LUX_SCALE

#define K7T   0x029a        // 1.3 * 2^RATIO_SCALE
#define B7T   0x0018        // 0.00146 * 2^LUX_SCALE
#define M7T   0x0012        // 0.00112 * 2^LUX_SCALE

#define K8T   0x029a        // 1.3 * 2^RATIO_SCALE
#define B8T   0x0000        // 0.000 * 2^LUX_SCALE
#define M8T   0x0000        // 0.000 * 2^LUX_SCALE

//-----------------------------------------------------
// CS package coefficients
//-----------------------------------------------------
// For 0 <= Ch1/Ch0 <= 0.52
//           Lux/Ch0 = 0.0315-0.0593*((Ch1/Ch0)^1.4)
//           piecewise approximation
//                 For 0 <= Ch1/Ch0 <= 0.13
//                       Lux/Ch0 = 0.0315-0.0262*(Ch1/Ch0)
//                 For 0.13 <= Ch1/Ch0 <= 0.26
//                       Lux/Ch0 = 0.0337-0.0430*(Ch1/Ch0)
//                 For 0.26 <= Ch1/Ch0 <= 0.39
//                       Lux/Ch0 = 0.0363-0.0529*(Ch1/Ch0)
//                 For 0.39 <= Ch1/Ch0 <= 0.52
//                       Lux/Ch0 = 0.0392-0.0605*(Ch1/Ch0)
// For 0.52 < Ch1/Ch0 <= 0.65
//     Lux/Ch0 = 0.0229-0.0291*(Ch1/Ch0)
// For 0.65 < Ch1/Ch0 <= 0.80
//     Lux/Ch0 = 0.00157-0.00180*(Ch1/Ch0)
// For 0.80 < Ch1/Ch0 <= 1.30
//     Lux/Ch0 = 0.00338-0.00260*(Ch1/Ch0)
// For Ch1/Ch0 > 1.30
//     Lux = 0
//-----------------------------------------------------
#define K1C   0x0043 // 0.130 * 2^RATIO_SCALE
#define B1C   0x0204 // 0.0315 * 2^LUX_SCALE
#define M1C   0x01ad // 0.0262 * 2^LUX_SCALE

#define K2C   0x0085 // 0.260 * 2^RATIO_SCALE
#define B2C   0x0228 // 0.0337 * 2^LUX_SCALE
#define M2C   0x02c1 // 0.0430 * 2^LUX_SCALE

#define K3C   0x00c8 // 0.390 * 2^RATIO_SCALE
#define B3C   0x0253 // 0.0363 * 2^LUX_SCALE
#define M3C   0x0363 // 0.0529 * 2^LUX_SCALE
```


Copyright © 2009, TAOS Inc.

```
#define K4C   0x010a // 0.520 * 2^RATIO_SCALE
#define B4C   0x0282 // 0.0392 * 2^LUX_SCALE
#define M4C   0x03df // 0.0605 * 2^LUX_SCALE

#define K5C   0x014d // 0.65 * 2^RATIO_SCALE
#define B5C   0x0177 // 0.0229 * 2^LUX_SCALE
#define M5C   0x01dd // 0.0291 * 2^LUX_SCALE

#define K6C   0x019a // 0.80 * 2^RATIO_SCALE
#define B6C   0x0101 // 0.0157 * 2^LUX_SCALE
#define M6C   0x0127 // 0.0180 * 2^LUX_SCALE

#define K7C   0x029a // 1.3 * 2^RATIO_SCALE
#define B7C   0x0037 // 0.00338 * 2^LUX_SCALE
#define M7C   0x002b // 0.00260 * 2^LUX_SCALE

#define K8C   0x029a // 1.3 * 2^RATIO_SCALE
#define B8C   0x0000 // 0.000 * 2^LUX_SCALE
#define M8C   0x0000 // 0.000 * 2^LUX_SCALE

// lux equation approximation without floating point calculations
////////////////////////////////////////////////////////////////////////////////
//     Routine:     unsigned int CalculateLux(unsigned int ch0, unsigned int ch0, int iType)
//
//     Description: Calculate the approximate illuminance (lux) given the raw
//                  channel values of the TSL2560. The equation if implemented
//                  as a piece-wise linear approximation.
//
//     Arguments:   unsigned int iGain - gain, where 0:1X, 1:16X
//                  unsigned int tInt - integration time, where 0:13.7mS, 1:100mS, 2:402mS,
//                   3:Manual
//                  unsigned int ch0 - raw channel value from channel 0 of TSL2560
//                  unsigned int ch1 - raw channel value from channel 1 of TSL2560
//                  unsigned int iType - package type (T or CS)
//
//     Return:      unsigned int - the approximate illuminance (lux)
//
////////////////////////////////////////////////////////////////////////////////
unsigned int CalculateLux(unsigned int iGain, unsigned int tInt, unsigned int ch0,
       unsigned int ch1, int iType)
{

       //-----------------------------------------------------------------------
       // first, scale the channel values depending on the gain and integration time
       // 16X, 402mS is nominal.
       // scale if integration time is NOT 402 msec
       unsigned long chScale;
       unsigned long channel1;
       unsigned long channel0;
       switch (tInt)
       {
           case 0:    // 13.7 msec
                  chScale = CHSCALE_TINT0;
                  break;
           case 1:    // 101 msec
                  chScale = CHSCALE_TINT1;
                  break;
           default:   // assume no scaling
                  chScale = (1 << CH_SCALE);
```

```
            break;
}

// scale if gain is NOT 16X
if (!iGain) chScale = chScale << 4;   // scale 1X to 16X

// scale the channel values
channel0 = (ch0 * chScale) >> CH_SCALE;
channel1 = (ch1 * chScale) >> CH_SCALE;
//-----------------------------------------------------------------------

// find the ratio of the channel values (Channel1/Channel0)
// protect against divide by zero
unsigned long ratio1 = 0;
if (channel0 != 0) ratio1 = (channel1 << (RATIO_SCALE+1)) / channel0;

// round the ratio value
unsigned long ratio = (ratio1 + 1) >> 1;

// is ratio <= eachBreak ?
unsigned int b, m;
switch (iType)
{



     case 0: // T, FN and CL package
            if ((ratio >= 0) && (ratio <= K1T))
                   {b=B1T; m=M1T;}
            else if (ratio <= K2T)
                   {b=B2T; m=M2T;}
            else if (ratio <= K3T)
                   {b=B3T; m=M3T;}
            else if (ratio <= K4T)
                   {b=B4T; m=M4T;}
            else if (ratio <= K5T)
                   {b=B5T; m=M5T;}
            else if (ratio <= K6T)
                   {b=B6T; m=M6T;}
            else if (ratio <= K7T)
                   {b=B7T; m=M7T;}
            else if (ratio > K8T)
                   {b=B8T; m=M8T;}
            break;

     case 1:// CS package
            if ((ratio >= 0) && (ratio <= K1C))
                   {b=B1C; m=M1C;}
            else if (ratio <= K2C)
                   {b=B2C; m=M2C;}
            else if (ratio <= K3C)
                   {b=B3C; m=M3C;}
            else if (ratio <= K4C)
                   {b=B4C; m=M4C;}
            else if (ratio <= K5C)
                   {b=B5C; m=M5C;}
            else if (ratio <= K6C)
                   {b=B6C; m=M6C;}
            else if (ratio <= K7C)
                   {b=B7C; m=M7C;}
```


Copyright © 2009, TAOS Inc.

```
                  else if (ratio > K8C)
                        {b=B8C; m=M8C;}
                  break;
        }

        unsigned long temp;
        temp = ((channel0 * b) - (channel1 * m));

        // do not allow negative lux value
        if (temp < 0) temp = 0;

        // round lsb (2^(LUX_SCALE-1))
        temp += (1 << (LUX_SCALE-1));

        // strip off fractional portion
        unsigned long lux = temp >> LUX_SCALE;

        return(lux);

}
```

Copyright © 2009, TAOS Inc.

APPLICATION INFORMATION: HARDWARE

Power Supply Decoupling and Application Hardware Circuit

The power supply lines must be decoupled with a 0.1 μF capacitor placed as close to the device package as possible (Figure 18). The bypass capacitor should have low effective series resistance (ESR) and low effective series inductance (ESI), such as the common ceramic types, which provide a low impedance path to ground at high frequencies to handle transient currents caused by internal logic switching.

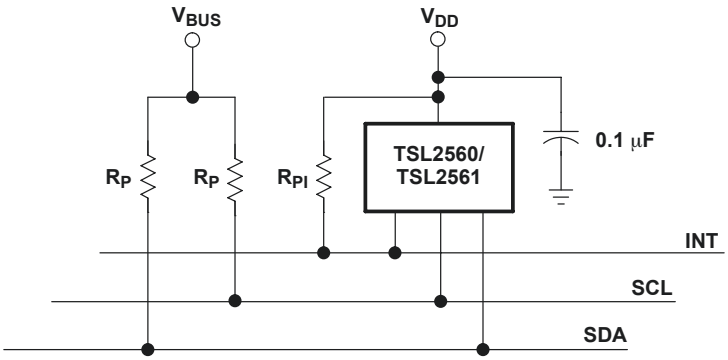

Figure 18. Bus Pull-Up Resistors

Pull-up resistors (Rp) maintain the SDAH and SCLH lines at a *high* level when the bus is free and ensure the signals are pulled up from a low to a high level within the required rise time. For a complete description of the SMBus maximum and minimum Rp values, please review the SMBus Specification at http://www.smbus.org/specs. For a complete description of I^2C maximum and minimum Rp values, please review the I^2C Specification at http://www.semiconductors.philips.com.

A pull-up resistor (R_{PI}) is also required for the interrupt (INT), which functions as a wired-AND signal in a similar fashion to the SCL and SDA lines. A typical impedance value between 10 kΩ and 100 kΩ can be used. Please note that while Figure 18 shows INT being pulled up to V_{DD}, the interrupt can optionally be pulled up to V_{BUS}.

Copyright © 2009, TAOS Inc.

APPLICATION INFORMATION: HARDWARE

PCB Pad Layout

Suggested PCB pad layout guidelines for the TMB-6 (T) surface mount package, chipscale (CS) package, Dual Flat No-Lead (FN) surface mount package, and ChipLED−6 (CL) surface mount package are shown in Figure 19, Figure 20, Figure 21, and Figure 22.

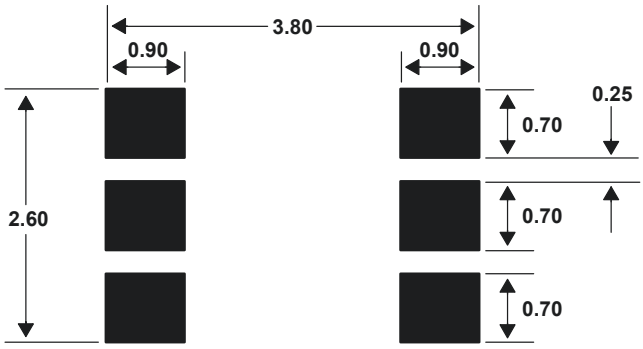

NOTES: A. All linear dimensions are in millimeters.
B. This drawing is subject to change without notice.

Figure 19. Suggested T Package PCB Layout

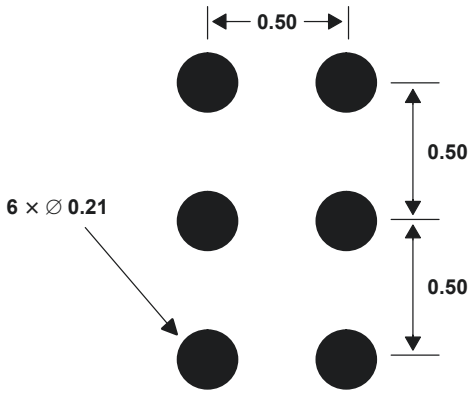

NOTES: A. All linear dimensions are in millimeters.
B. This drawing is subject to change without notice.

Figure 20. Suggested CS Package PCB Layout

Copyright © 2009, TAOS Inc.

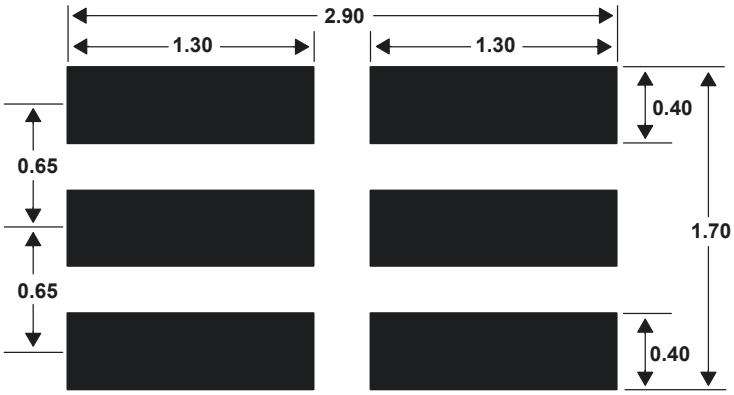

NOTES: A. All linear dimensions are in millimeters.
B. This drawing is subject to change without notice.

Figure 21. Suggested FN Package PCB Layout

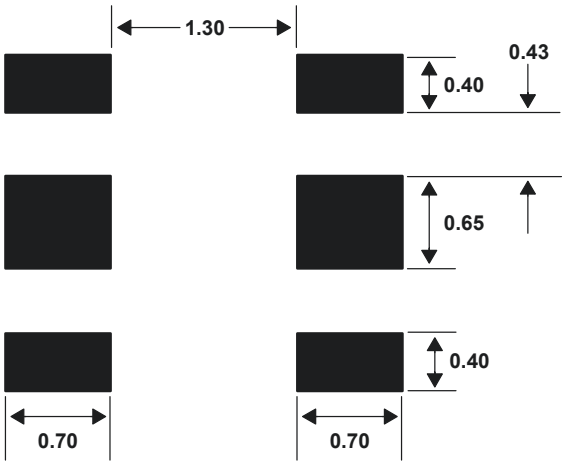

NOTES: A. All linear dimensions are in millimeters.
B. This drawing is subject to change without notice.

Figure 22. Suggested CL Package PCB Layout

Copyright © 2009, TAOS Inc.

MECHANICAL DATA

PACKAGE CS **Six-Lead Chipscale Device**

TOP VIEW

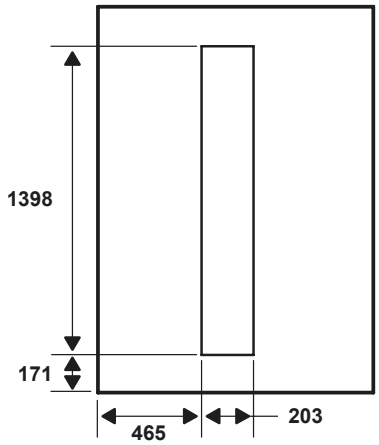

PIN OUT
BOTTOM VIEW

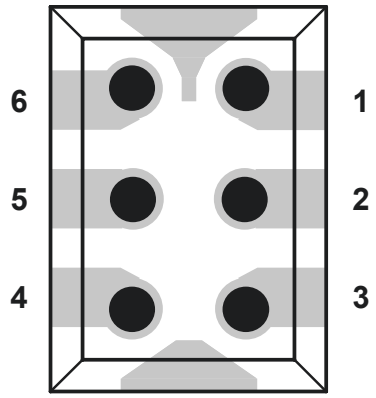

END VIEW

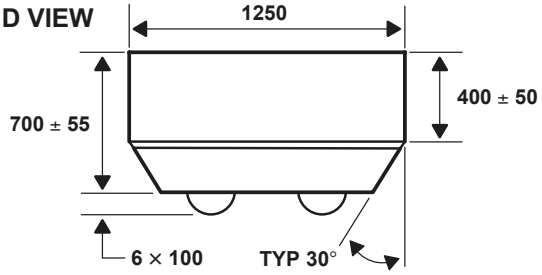

BOTTOM VIEW

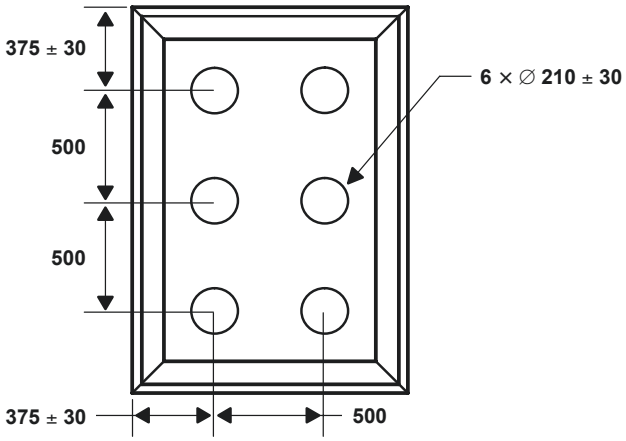

SIDE VIEW

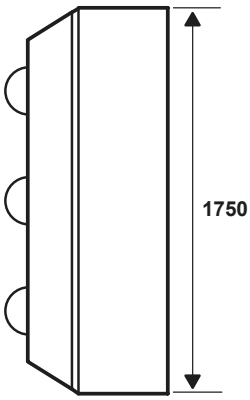

Lead Free

NOTES: A. All linear dimensions are in micrometers. Dimension tolerance is ± 25 µm unless otherwise noted.
B. Solder bumps are formed of Sn (96.5%), Ag (3%), and Cu (0.5%).
C. The top of the photodiode active area is 410 µm below the top surface of the package.
D. The layer above the photodiode is glass and epoxy with an index of refraction of 1.53.
E. This drawing is subject to change without notice.

Figure 23. Package CS — Six-Lead Chipscale Packaging Configuration

Copyright © 2009, TAOS Inc.

MECHANICAL DATA

PACKAGE TMB-6 **Six-Lead Surface Mount Device**

TOP VIEW

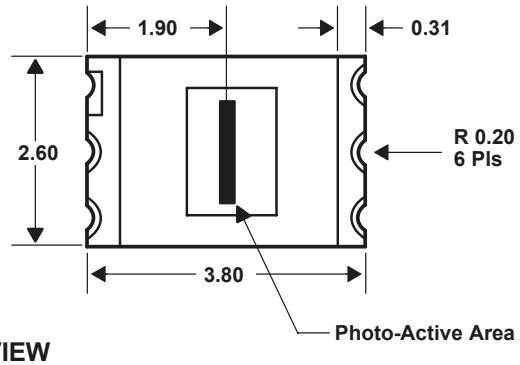

TOP VIEW

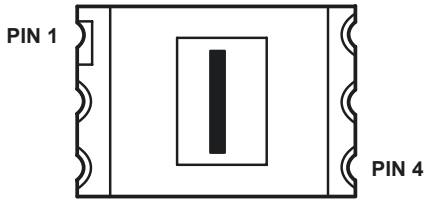

END VIEW

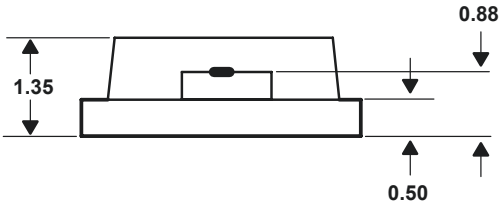

BOTTOM VIEW

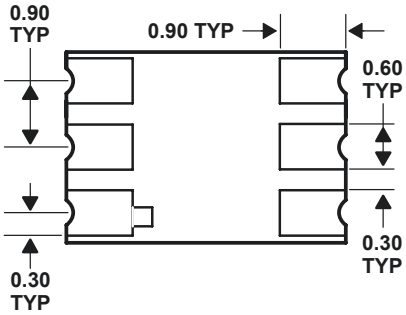

Lead Free

NOTES:
A. All linear dimensions are in millimeters. Dimension tolerance is ± 0.20 mm unless otherwise noted.
B. The photo-active area is 1398 µm by 203 µm.
C. Package top surface is molded with an electrically nonconductive clear plastic compound having an index of refraction of 1.55.
D. Contact finish is 0.5 µm minimum of soft gold plated over a 18 µm thick copper foil pattern with a 5 µm to 9 µm nickel barrier.
E. The underside of the package includes copper traces used to connect the pads during package substrate fabrication. Accordingly, exposed traces and vias should not be placed under the footprint of the TMB package in a PCB layout.
F. This package contains no lead (Pb).
G. This drawing is subject to change without notice.

Figure 24. Package T — Six-Lead TMB Plastic Surface Mount Packaging Configuration

Copyright © 2009, TAOS Inc.

MECHANICAL DATA

PACKAGE FN **Dual Flat No-Lead**

TOP VIEW

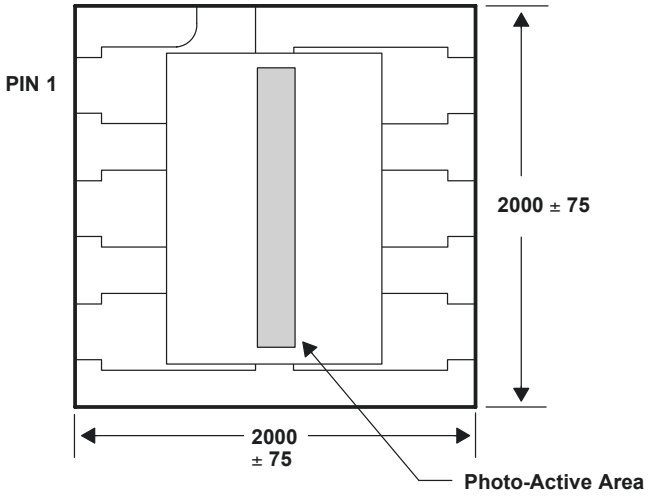

PIN OUT
TOP VIEW

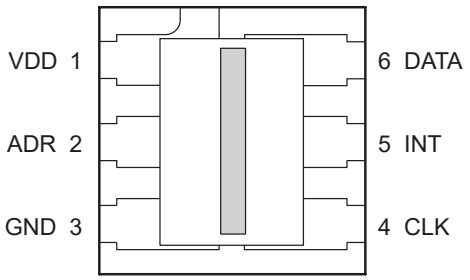

END VIEW

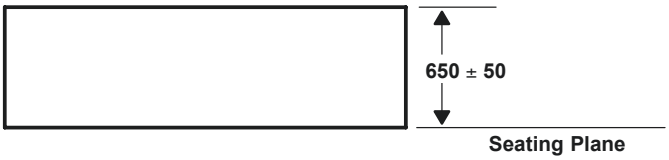

SIDE VIEW

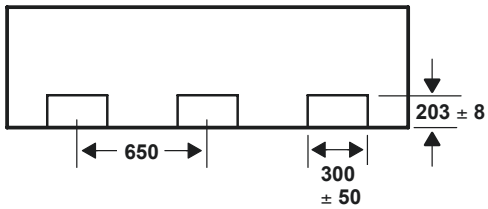

BOTTOM VIEW

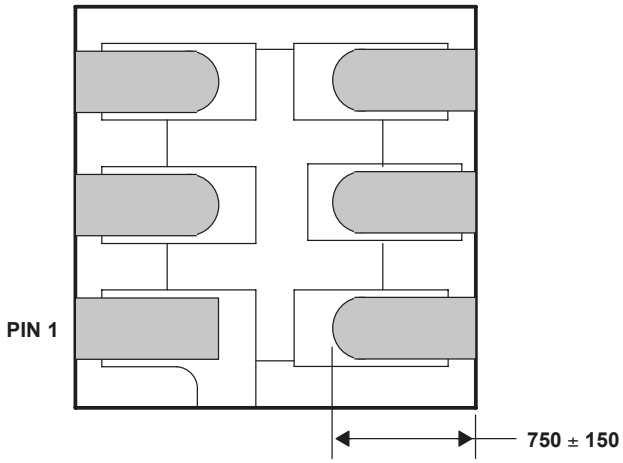

Lead Free

NOTES: A. All linear dimensions are in micrometers. Dimension tolerance is ± 20 µm unless otherwise noted.
B. The photo-active area is 1398 µm by 203 µm.
C. Package top surface is molded with an electrically nonconductive clear plastic compound having an index of refraction of 1.55.
D. Contact finish is copper alloy A194 with pre-plated NiPdAu lead finish.
E. This package contains no lead (Pb).
F. This drawing is subject to change without notice.

Figure 25. Package FN — Dual Flat No-Lead Packaging Configuration

Copyright © 2009, TAOS Inc.

MECHANICAL DATA

PACKAGE CL-6 **Six-Lead Surface Mount Device**

TOP VIEW

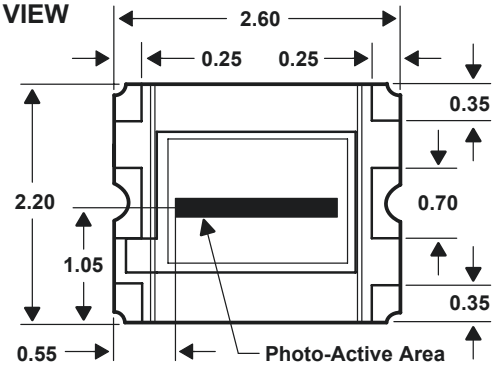

TOP VIEW

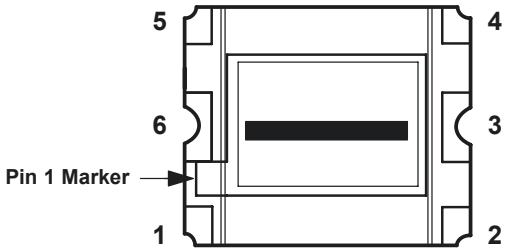

SIDE VIEW

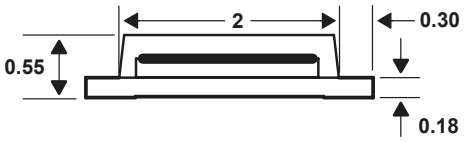

BOTTOM VIEW

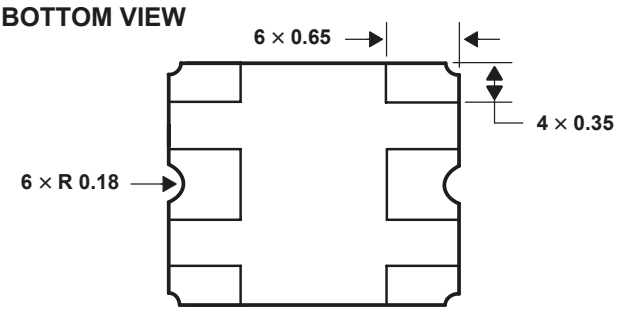

Lead Free

NOTES: A. All linear dimensions are in millimeters. Dimension tolerance is ± 0.20 mm unless otherwise noted.
B. The photo-active area is 1398 µm by 203 µm.
C. Package top surface is molded with an electrically nonconductive clear plastic compound having an index of refraction of 1.55.
D. Contact finish is 0.1 µm (minimum) to 1.0 µm (maximum) of soft gold plated over a 15 µm (minimum) to 30 µm (maximum) thick copper foil pattern with a 3 µm (minimum) to 15 µm (maximum) nickel barrier.
E. This package contains no lead (Pb).
F. This drawing is subject to change without notice.

Figure 26. Package CL — Six-Lead ChipLED Plastic Surface Mount Packaging Configuration

Copyright © 2009, TAOS Inc.

MECHANICAL DATA

TOP VIEW

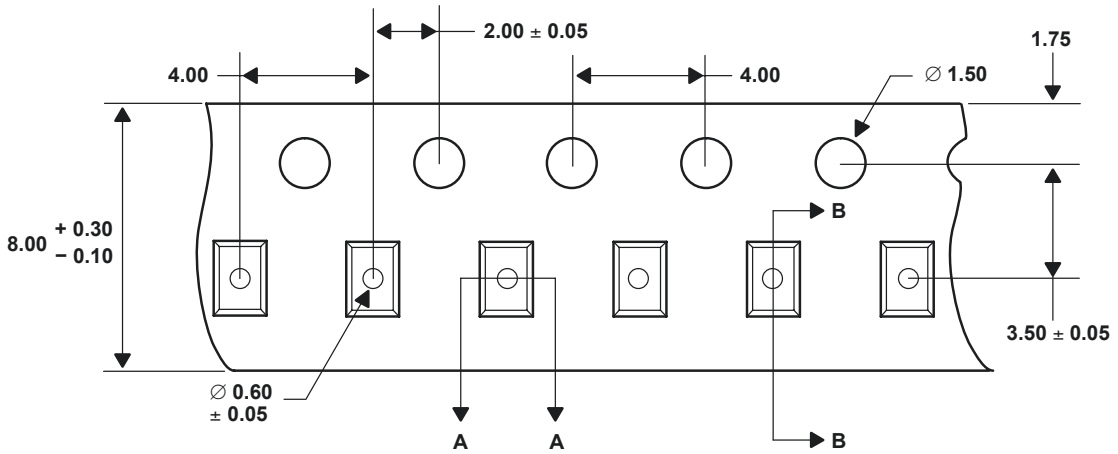

DETAIL A

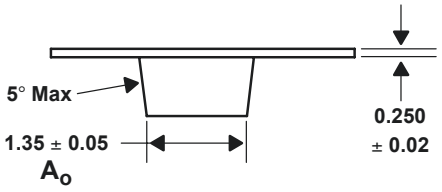

DETAIL B

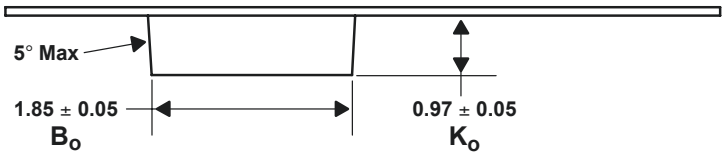

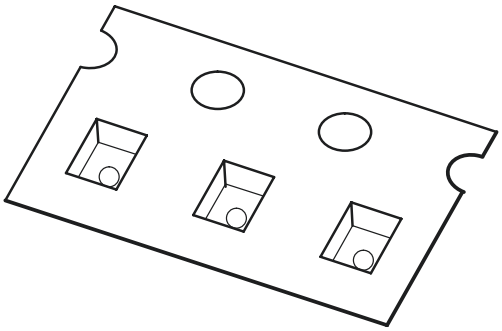

NOTES:
A. All linear dimensions are in millimeters. Dimension tolerance is ± 0.10 mm unless otherwise noted.
B. The dimensions on this drawing are for illustrative purposes only. Dimensions of an actual carrier may vary slightly.
C. Symbols on drawing A_o, B_o, and K_o are defined in ANSI EIA Standard 481−B 2001.
D. Each reel is 178 millimeters in diameter and contains 3500 parts.
E. TAOS packaging tape and reel conform to the requirements of EIA Standard 481−B.
F. In accordance with EIA standard, device pin 1 is located next to the sprocket holes in the tape.
G. This drawing is subject to change without notice.

Figure 27. TSL2560/TSL2561 Chipscale Carrier Tape

Copyright © 2009, TAOS Inc.

MECHANICAL DATA

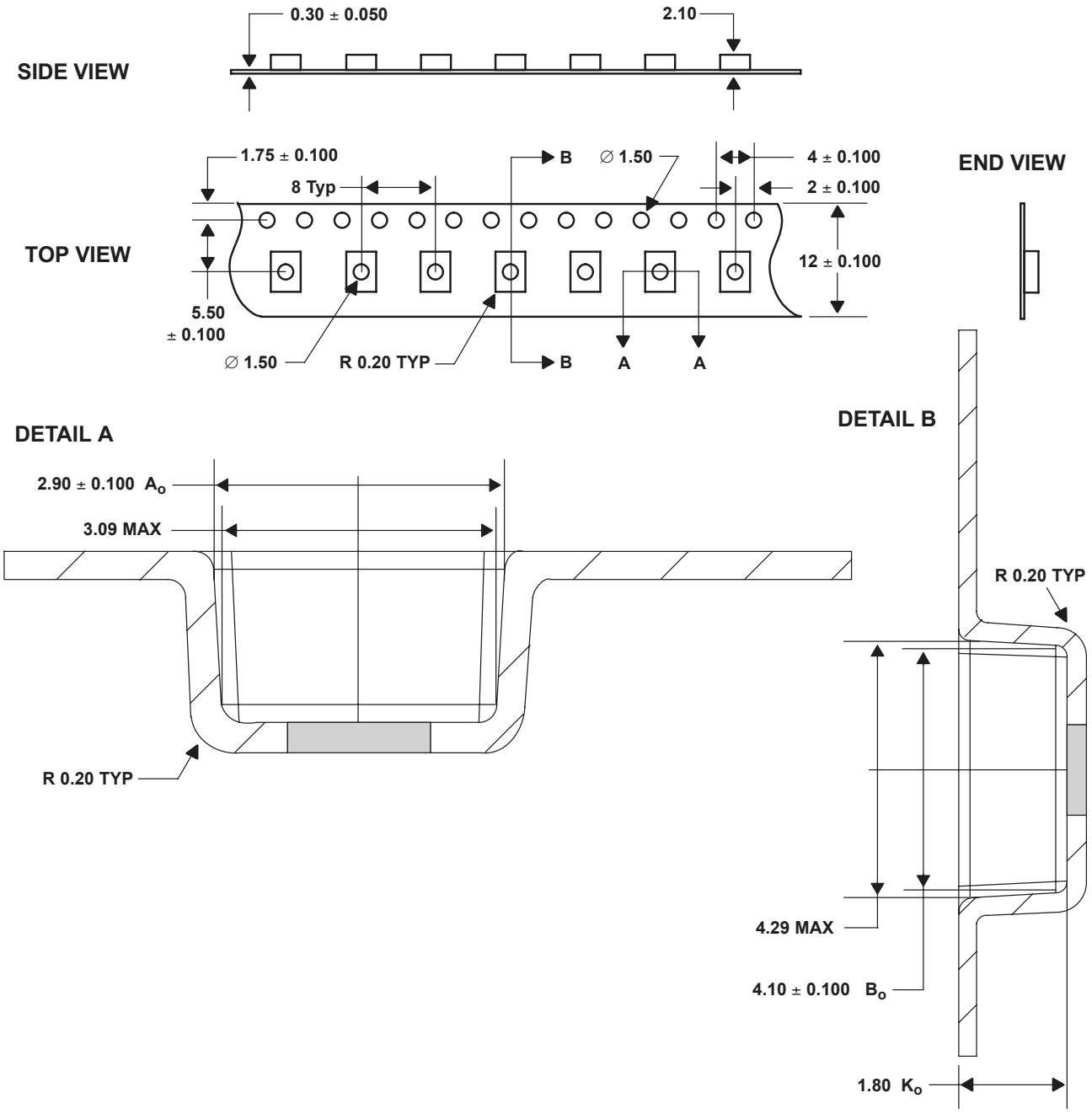

NOTES:
A. All linear dimensions are in millimeters.
B. The dimensions on this drawing are for illustrative purposes only. Dimensions of an actual carrier may vary slightly.
C. Symbols on drawing A_o, B_o, and K_o are defined in ANSI EIA Standard 481−B 2001.
D. Each reel is 178 millimeters in diameter and contains 1000 parts.
E. TAOS packaging tape and reel conform to the requirements of EIA Standard 481−B.
F. In accordance with EIA standard, device pin 1 is located next to the sprocket holes in the tape.
G. This drawing is subject to change without notice.

Figure 28. TSL2560/TSL2561 TMB Carrier Tape

Copyright © 2009, TAOS Inc.

MECHANICAL DATA

TOP VIEW

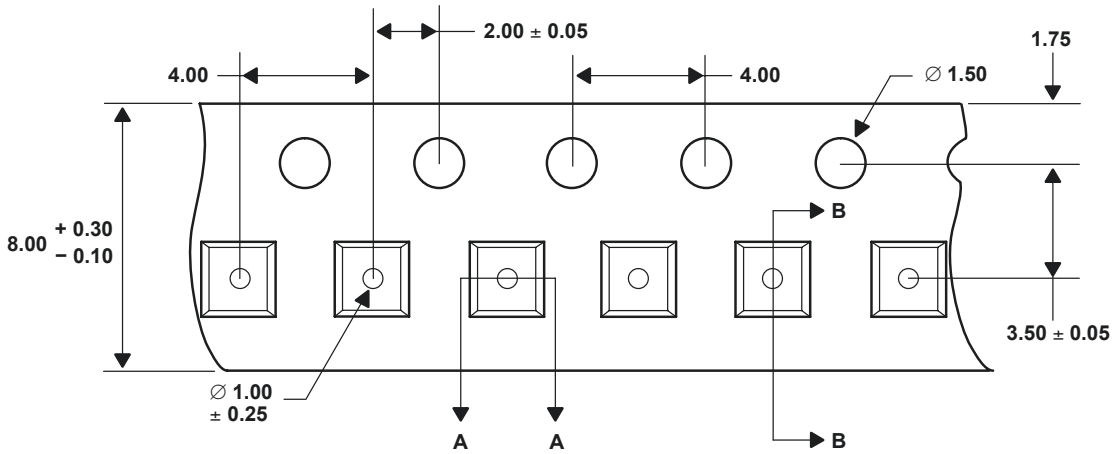

DETAIL A

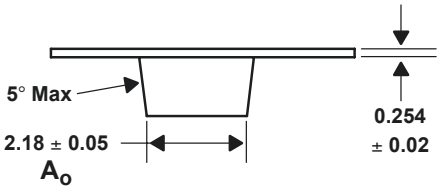

DETAIL B

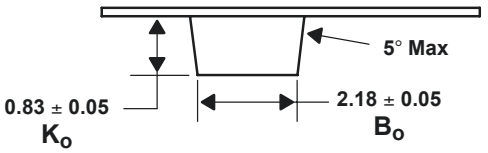

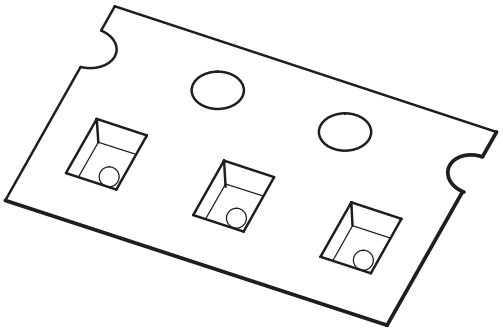

NOTES:
- H. All linear dimensions are in millimeters. Dimension tolerance is ± 0.10 mm unless otherwise noted.
- I. The dimensions on this drawing are for illustrative purposes only. Dimensions of an actual carrier may vary slightly.
- J. Symbols on drawing A_o, B_o, and K_o are defined in ANSI EIA Standard 481−B 2001.
- K. Each reel is 178 millimeters in diameter and contains 3500 parts.
- L. TAOS packaging tape and reel conform to the requirements of EIA Standard 481−B.
- M. In accordance with EIA standard, device pin 1 is located next to the sprocket holes in the tape.
- N. This drawing is subject to change without notice.

Figure 29. TSL2560/TSL2561 FN Carrier Tape

Copyright © 2009, TAOS Inc.

MECHANICAL DATA

TOP VIEW

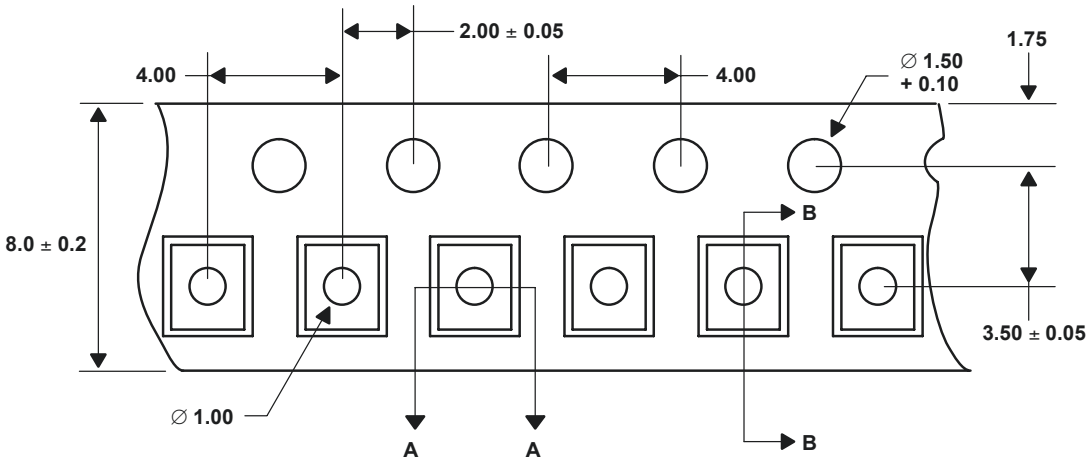

DETAIL A

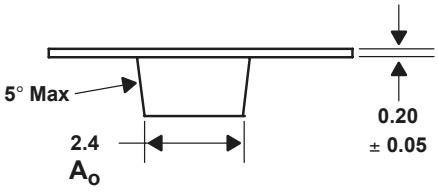

DETAIL B

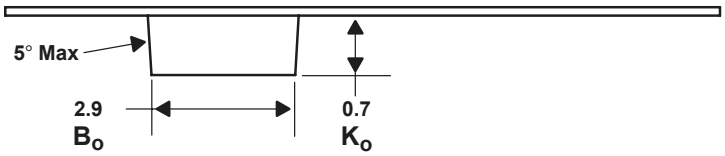

NOTES:
A. All linear dimensions are in millimeters. Dimension tolerance is ± 0.10 mm unless otherwise noted.
B. The dimensions on this drawing are for illustrative purposes only. Dimensions of an actual carrier may vary slightly.
C. Symbols on drawing A_o, B_o, and K_o are defined in ANSI EIA Standard 481−B 2001.
D. Each reel is 178 millimeters in diameter and contains 2500 parts.
E. TAOS packaging tape and reel conform to the requirements of EIA Standard 481−B.
F. In accordance with EIA standard, device pin 1 is located next to the sprocket holes in the tape.
G. This drawing is subject to change without notice.

Figure 30. TSL2560/TSL2561 CL Carrier Tape

Copyright © 2009, TAOS Inc.

MANUFACTURING INFORMATION

The CS, T, FN, and CL packages have been tested and have demonstrated an ability to be reflow soldered to a PCB substrate. The process, equipment, and materials used in these test are detailed below.

The solder reflow profile describes the expected maximum heat exposure of components during the solder reflow process of product on a PCB. Temperature is measured on top of component. The components should be limited to a maximum of three passes through this solder reflow profile.

Table 13. TSL2560/61 Solder Reflow Profile

PARAMETER	REFERENCE	TSL2560/61
Average temperature gradient in preheating		2.5°C/sec
Soak time	t_{soak}	2 to 3 minutes
Time above 217°C	t_1	Max 60 sec
Time above 230°C	t_2	Max 50 sec
Time above T_{peak} −10°C	t_3	Max 10 sec
Peak temperature in reflow	T_{peak}	260° C (−0°C/+5°C)
Temperature gradient in cooling		Max −5°C/sec

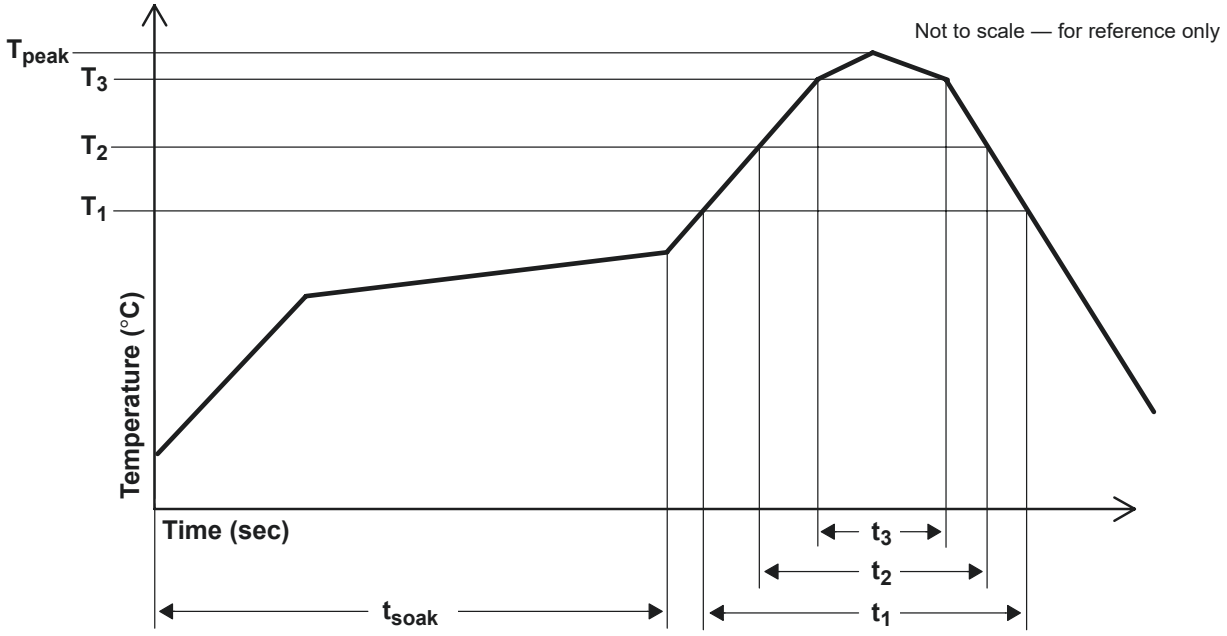

Figure 31. TSL2560/TSL2561 Solder Reflow Profile Graph

Copyright © 2009, TAOS Inc.

MANUFACTURING INFORMATION

Moisture Sensitivity

Optical characteristics of the device can be adversely affected during the soldering process by the release and vaporization of moisture that has been previously absorbed into the package molding compound. To ensure the package molding compound contains the smallest amount of absorbed moisture possible, each device is dry-baked prior to being packed for shipping. Devices are packed in a sealed aluminized envelope with silica gel to protect them from ambient moisture during shipping, handling, and storage before use.

The CS package has been assigned a moisture sensitivity level of MSL 2 and the devices should be stored under the following conditions:

Temperature Range	5°C to 50°C
Relative Humidity	60% maximum
Floor Life	1 year out of bag at ambient < 30°C / 60% RH

Rebaking will be required if the aluminized envelope has been open for more than 1 year. If rebaking is required, it should be done at 90°C for 3 hours.

The T, FN, and CL packages have been assigned a moisture sensitivity level of MSL 3 and the devices should be stored under the following conditions:

Temperature Range	5°C to 50°C
Relative Humidity	60% maximum
Total Time	6 months from the date code on the aluminized envelope — if unopened
Opened Time	168 hours or fewer

Rebaking will be required if the devices have been stored unopened for more than 6 months or if the aluminized envelope has been open for more than 168 hours. If rebaking is required, it should be done at 90°C for 4 hours.

Copyright © 2009, TAOS Inc.

PRODUCTION DATA — information in this document is current at publication date. Products conform to specifications in accordance with the terms of Texas Advanced Optoelectronic Solutions, Inc. standard warranty. Production processing does not necessarily include testing of all parameters.

LEAD-FREE (Pb-FREE) and GREEN STATEMENT

Pb-Free (RoHS) TAOS' terms *Lead-Free* or *Pb-Free* mean semiconductor products that are compatible with the current RoHS requirements for all 6 substances, including the requirement that lead not exceed 0.1% by weight in homogeneous materials. Where designed to be soldered at high temperatures, TAOS Pb-Free products are suitable for use in specified lead-free processes.

Green (RoHS & no Sb/Br) TAOS defines *Green* to mean Pb-Free (RoHS compatible), and free of Bromine (Br) and Antimony (Sb) based flame retardants (Br or Sb do not exceed 0.1% by weight in homogeneous material).

Important Information and Disclaimer The information provided in this statement represents TAOS' knowledge and belief as of the date that it is provided. TAOS bases its knowledge and belief on information provided by third parties, and makes no representation or warranty as to the accuracy of such information. Efforts are underway to better integrate information from third parties. TAOS has taken and continues to take reasonable steps to provide representative and accurate information but may not have conducted destructive testing or chemical analysis on incoming materials and chemicals. TAOS and TAOS suppliers consider certain information to be proprietary, and thus CAS numbers and other limited information may not be available for release.

NOTICE

Texas Advanced Optoelectronic Solutions, Inc. (TAOS) reserves the right to make changes to the products contained in this document to improve performance or for any other purpose, or to discontinue them without notice. Customers are advised to contact TAOS to obtain the latest product information before placing orders or designing TAOS products into systems.

TAOS assumes no responsibility for the use of any products or circuits described in this document or customer product design, conveys no license, either expressed or implied, under any patent or other right, and makes no representation that the circuits are free of patent infringement. TAOS further makes no claim as to the suitability of its products for any particular purpose, nor does TAOS assume any liability arising out of the use of any product or circuit, and specifically disclaims any and all liability, including without limitation consequential or incidental damages.

TEXAS ADVANCED OPTOELECTRONIC SOLUTIONS, INC. PRODUCTS ARE NOT DESIGNED OR INTENDED FOR USE IN CRITICAL APPLICATIONS IN WHICH THE FAILURE OR MALFUNCTION OF THE TAOS PRODUCT MAY RESULT IN PERSONAL INJURY OR DEATH. USE OF TAOS PRODUCTS IN LIFE SUPPORT SYSTEMS IS EXPRESSLY UNAUTHORIZED AND ANY SUCH USE BY A CUSTOMER IS COMPLETELY AT THE CUSTOMER'S RISK.

LUMENOLOGY, TAOS, the TAOS logo, and Texas Advanced Optoelectronic Solutions are registered trademarks of Texas Advanced Optoelectronic Solutions Incorporated.

DS18B20

Programmable Resolution 1-Wire Digital Thermometer

General Description

The DS18B20 digital thermometer provides 9-bit to 12-bit Celsius temperature measurements and has an alarm function with nonvolatile user-programmable upper and lower trigger points. The DS18B20 communicates over a 1-Wire bus that by definition requires only one data line (and ground) for communication with a central microprocessor. In addition, the DS18B20 can derive power directly from the data line ("parasite power"), eliminating the need for an external power supply.

Each DS18B20 has a unique 64-bit serial code, which allows multiple DS18B20s to function on the same 1-Wire bus. Thus, it is simple to use one microprocessor to control many DS18B20s distributed over a large area. Applications that can benefit from this feature include HVAC environmental controls, temperature monitoring systems inside buildings, equipment, or machinery, and process monitoring and control systems.

Applications

- Thermostatic Controls
- Industrial Systems
- Consumer Products
- Thermometers
- Thermally Sensitive Systems

***Ordering Information* appears at end of data sheet.**

1-Wire is a registered trademark of Maxim Integrated Products, Inc.

Benefits and Features

- Unique 1-Wire® Interface Requires Only One Port Pin for Communication
- Reduce Component Count with Integrated Temperature Sensor and EEPROM
  - Measures Temperatures from -55°C to +125°C (-67°F to +257°F)
  - ±0.5°C Accuracy from -10°C to +85°C
  - Programmable Resolution from 9 Bits to 12 Bits
  - No External Components Required
- Parasitic Power Mode Requires Only 2 Pins for Operation (DQ and GND)
- Simplifies Distributed Temperature-Sensing Applications with Multidrop Capability
  - Each Device Has a Unique 64-Bit Serial Code Stored in On-Board ROM
- Flexible User-Definable Nonvolatile (NV) Alarm Settings with Alarm Search Command Identifies Devices with Temperatures Outside Programmed Limits
- Available in 8-Pin SO (150 mils), 8-Pin µSOP, and 3-Pin TO-92 Packages

Pin Configurations

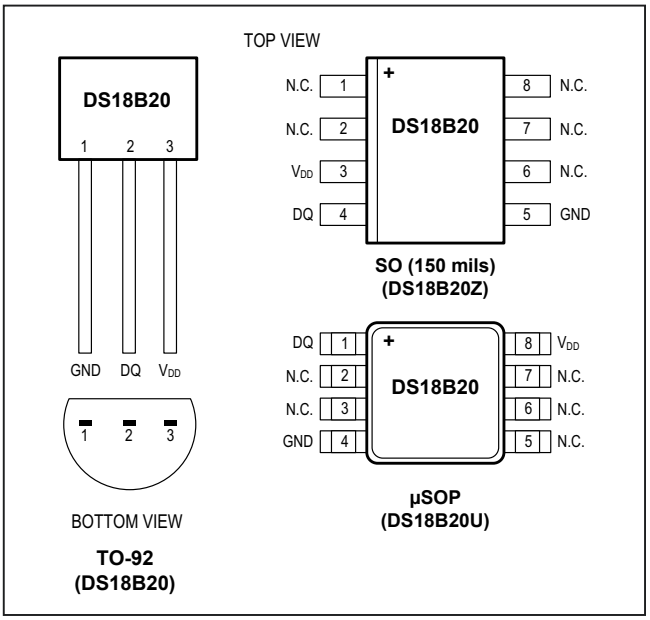

Absolute Maximum Ratings

Voltage Range on Any Pin Relative to Ground ....-0.5V to +6.0V
Operating Temperature Range..... -55°C to +125°C
Storage Temperature Range..... -55°C to +125°C
Solder Temperature.....Refer to the IPC/JEDEC J-STD-020 Specification.

These are stress ratings only and functional operation of the device at these or any other conditions above those indicated in the operation sections of this specification is not implied. Exposure to absolute maximum rating conditions for extended periods of time may affect reliability.

DC Electrical Characteristics

(-55°C to +125°C; V_{DD} = 3.0V to 5.5V)

PARAMETER	SYMBOL	CONDITIONS		MIN	TYP	MAX	UNITS
Supply Voltage	V_{DD}	Local power (Note 1)		+3.0		+5.5	V
Pullup Supply Voltage	V_{PU}	Parasite power	(Notes 1, 2)	+3.0		+5.5	V
		Local power		+3.0		V_{DD}	
Thermometer Error	t_{ERR}	-10°C to +85°C	(Note 3)			±0.5	°C
		-30°C to +100°C				±1	
		-55°C to +125°C				±2	
Input Logic-Low	V_{IL}	(Notes 1, 4, 5)		-0.3		+0.8	V
Input Logic-High	V_{IH}	Local power	(Notes 1,6)	+2.2		The lower of 5.5 or V_{DD} + 0.3	V
		Parasite power		+3.0			
Sink Current	I_L	$V_{I/O}$ = 0.4V		4.0			mA
Standby Current	I_{DDS}	(Notes 7, 8)			750	1000	nA
Active Current	I_{DD}	V_{DD} = 5V (Note 9)			1	1.5	mA
DQ Input Current	I_{DQ}	(Note 10)			5		µA
Drift		(Note 11)			±0.2		°C

Note 1: All voltages are referenced to ground.
Note 2: The Pullup Supply Voltage specification assumes that the pullup device is ideal, and therefore the high level of the pullup is equal to V_{PU}. In order to meet the V_{IH} spec of the DS18B20, the actual supply rail for the strong pullup transistor must include margin for the voltage drop across the transistor when it is turned on; thus: $V_{PU\_ACTUAL} = V_{PU\_IDEAL} + V_{TRANSISTOR}$.
Note 3: See typical performance curve in Figure 1. Thermometer Error limits are 3-sigma values.
Note 4: Logic-low voltages are specified at a sink current of 4mA.
Note 5: To guarantee a presence pulse under low voltage parasite power conditions, V_{ILMAX} may have to be reduced to as low as 0.5V.
Note 6: Logic-high voltages are specified at a source current of 1mA.
Note 7: Standby current specified up to +70°C. Standby current typically is 3µA at +125°C.
Note 8: To minimize I_{DDS}, DQ should be within the following ranges: GND ≤ DQ ≤ GND + 0.3V or V_{DD} – 0.3V ≤ DQ ≤ V_{DD}.
Note 9: Active current refers to supply current during active temperature conversions or EEPROM writes.
Note 10: DQ line is high (“high-Z” state).
Note 11: Drift data is based on a 1000-hour stress test at +125°C with V_{DD} = 5.5V.

AC Electrical Characteristics–NV Memory

(-55°C to +125°C; V_{DD} = 3.0V to 5.5V)

PARAMETER	SYMBOL	CONDITIONS	MIN	TYP	MAX	UNITS
NV Write Cycle Time	t_{WR}			2	10	ms
EEPROM Writes	N_{EEWR}	-55°C to +55°C	50k			writes
EEPROM Data Retention	t_{EEDR}	-55°C to +55°C	10			years

AC Electrical Characteristics

(-55°C to +125°C; V_{DD} = 3.0V to 5.5V)

PARAMETER	SYMBOL	CONDITIONS		MIN	TYP	MAX	UNITS
Temperature Conversion Time	t_{CONV}	9-bit resolution	(Note 12)			93.75	ms
		10-bit resolution				187.5	
		11-bit resolution				375	
		12-bit resolution				750	
Time to Strong Pullup On	t_{SPON}	Start convert T command issued				10	µs
Time Slot	t_{SLOT}	(Note 12)		60		120	µs
Recovery Time	t_{REC}	(Note 12)		1			µs
Write 0 Low Time	t_{LOW0}	(Note 12)		60		120	µs
Write 1 Low Time	t_{LOW1}	(Note 12)		1		15	µs
Read Data Valid	t_{RDV}	(Note 12)				15	µs
Reset Time High	t_{RSTH}	(Note 12)		480			µs
Reset Time Low	t_{RSTL}	(Notes 12, 13)		480			µs
Presence-Detect High	t_{PDHIGH}	(Note 12)		15		60	µs
Presence-Detect Low	t_{PDLOW}	(Note 12)		60		240	µs
Capacitance	$C_{IN/OUT}$					25	pF

Note 12: See the timing diagrams in Figure 2.
Note 13: Under parasite power, if t_{RSTL} > 960µs, a power-on reset can occur.

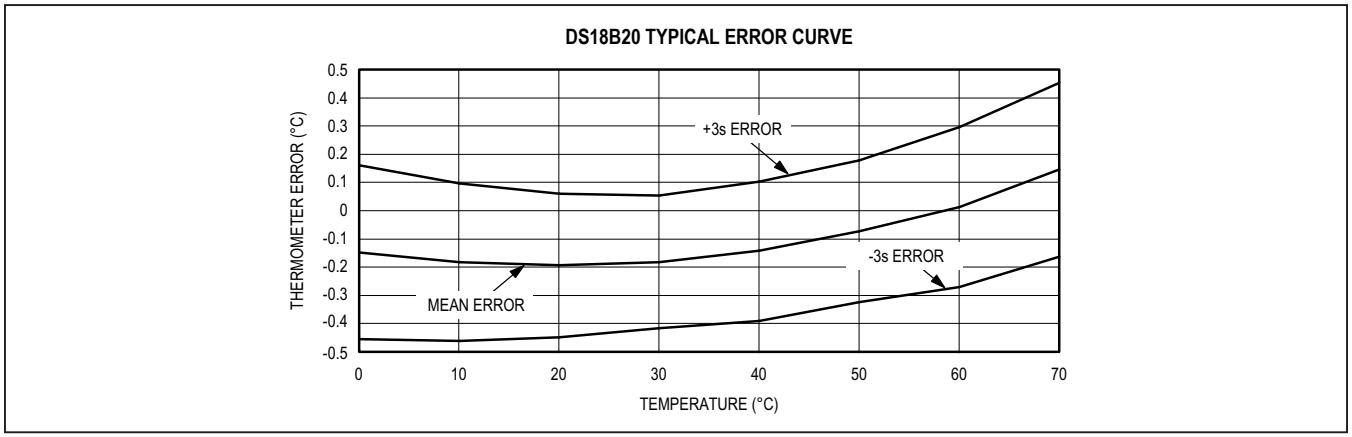

Figure 1. Typical Performance Curve

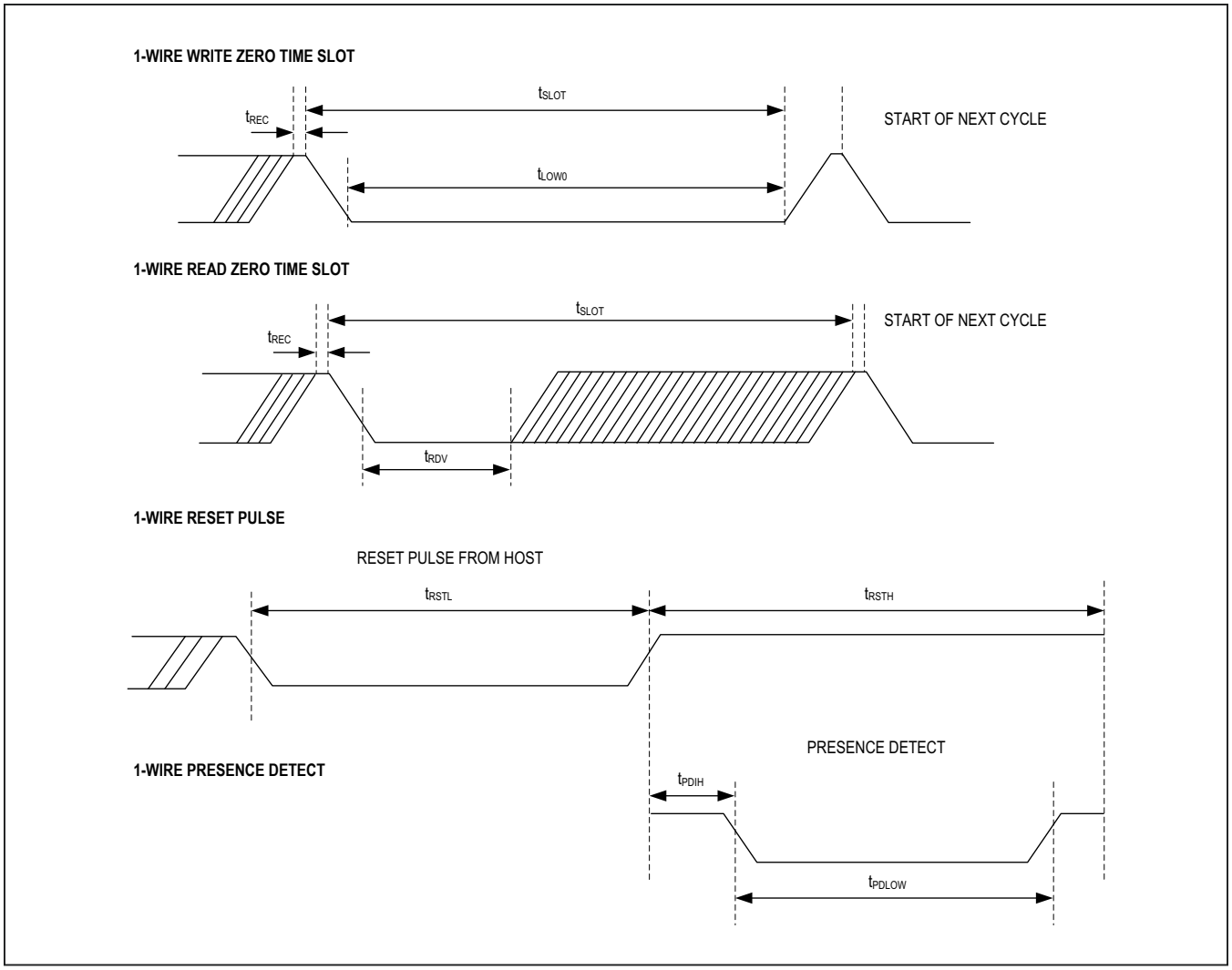

Figure 2. Timing Diagrams

Pin Description

PIN			NAME	FUNCTION
SO	µSOP	TO-92		
1, 2, 6, 7, 8	2, 3, 5, 6, 7	—	N.C.	No Connection
3	8	3	V_{DD}	Optional V_{DD}. V_{DD} must be grounded for operation in parasite power mode.
4	1	2	DQ	Data Input/Output. Open-drain 1-Wire interface pin. Also provides power to the device when used in parasite power mode (see the *Powering the DS18B20* section.)
5	4	1	GND	Ground

Overview

Figure 3 shows a block diagram of the DS18B20, and pin descriptions are given in the *Pin Description* table. The 64-bit ROM stores the device's unique serial code. The scratchpad memory contains the 2-byte temperature register that stores the digital output from the temperature sensor. In addition, the scratchpad provides access to the 1-byte upper and lower alarm trigger registers (T_H and T_L) and the 1-byte configuration register. The configuration register allows the user to set the resolution of the temperature-to-digital conversion to 9, 10, 11, or 12 bits. The T_H, T_L, and configuration registers are nonvolatile (EEPROM), so they will retain data when the device is powered down.

The DS18B20 uses Maxim's exclusive 1-Wire bus protocol that implements bus communication using one control signal. The control line requires a weak pullup resistor since all devices are linked to the bus via a 3-state or open-drain port (the DQ pin in the case of the DS18B20). In this bus system, the microprocessor (the master device) identifies and addresses devices on the bus using each device's unique 64-bit code. Because each device has a unique code, the number of devices that can be addressed on one bus is virtually unlimited. The 1-Wire bus protocol, including detailed explanations of the commands and "time slots," is covered in the *1-Wire Bus System* section.

Another feature of the DS18B20 is the ability to operate without an external power supply. Power is instead supplied through the 1-Wire pullup resistor through the DQ pin when the bus is high. The high bus signal also charges an internal capacitor (C_{PP}), which then supplies power to the device when the bus is low. This method of deriving power from the 1-Wire bus is referred to as "parasite power." As an alternative, the DS18B20 may also be powered by an external supply on V_{DD}.

Operation—Measuring Temperature

The core functionality of the DS18B20 is its direct-to-digital temperature sensor. The resolution of the temperature sensor is user-configurable to 9, 10, 11, or 12 bits, corresponding to increments of 0.5°C, 0.25°C, 0.125°C, and 0.0625°C, respectively. The default resolution at power-up is 12-bit. The DS18B20 powers up in a low-power idle state. To initiate a temperature measurement and A-to-D conversion, the master must issue a Convert T [44h] command. Following the conversion, the resulting thermal data is stored in the 2-byte temperature register in the scratchpad memory and the DS18B20 returns to its idle state. If the DS18B20 is powered by an external supply, the master can issue "read time slots" (see the *1-Wire Bus System* section) after the Convert T command and the DS18B20 will respond by transmitting 0 while the temperature conversion is in progress and 1 when the conversion is done. If the DS18B20 is powered with parasite power, this notification technique cannot be used since the bus must be pulled high by a strong pullup during the entire temperature conversion. The bus requirements for parasite power are explained in detail in the *Powering the DS18B20* section.

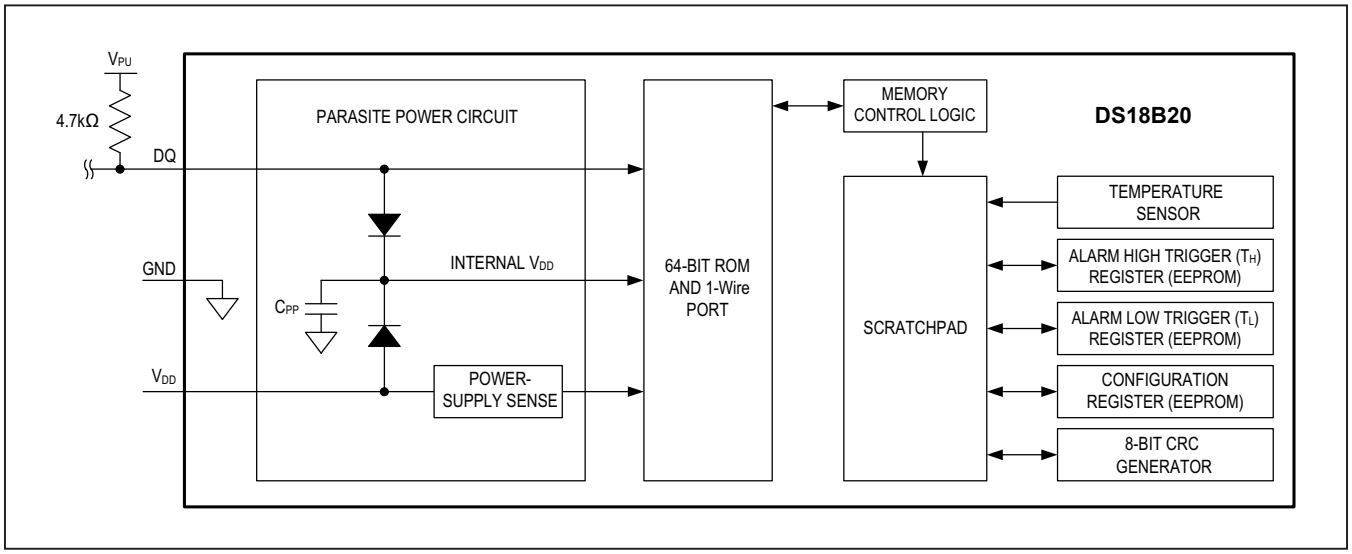

Figure 3. DS18B20 Block Diagram

The DS18B20 output temperature data is calibrated in degrees Celsius; for Fahrenheit applications, a lookup table or conversion routine must be used. The temperature data is stored as a 16-bit sign-extended two's complement number in the temperature register (see Figure 4). The sign bits (S) indicate if the temperature is positive or negative: for positive numbers S = 0 and for negative numbers S = 1. If the DS18B20 is configured for 12-bit resolution, all bits in the temperature register will contain valid data. For 11-bit resolution, bit 0 is undefined. For 10-bit resolution, bits 1 and 0 are undefined, and for 9-bit resolution bits 2, 1, and 0 are undefined. Table 1 gives examples of digital output data and the corresponding temperature reading for 12-bit resolution conversions.

Operation—Alarm Signaling

After the DS18B20 performs a temperature conversion, the temperature value is compared to the user-defined two's complement alarm trigger values stored in the 1-byte T_H and T_L registers (see Figure 5). The sign bit (S) indicates if the value is positive or negative: for positive numbers S = 0 and for negative numbers S = 1. The T_H and T_L registers are nonvolatile (EEPROM) so they will retain data when the device is powered down. T_H and T_L can be accessed through bytes 2 and 3 of the scratchpad as explained in the *Memory* section.

Only bits 11 through 4 of the temperature register are used in the T_H and T_L comparison since T_H and T_L are 8-bit registers. If the measured temperature is lower than

	BIT 7	BIT 6	BIT 5	BIT 4	BIT 3	BIT 2	BIT 1	BIT 0
LS BYTE	2^3	2^2	2^1	2^0	2^{-1}	2^{-2}	2^{-3}	2^{-4}
	BIT 15	**BIT 14**	**BIT 13**	**BIT 12**	**BIT 11**	**BIT 10**	**BIT 9**	**BIT 8**
MS BYTE	S	S	S	S	S	2^6	2^5	2^4

S = SIGN

Figure 4. Temperature Register Format

Table 1. Temperature/Data Relationship

TEMPERATURE (°C)	DIGITAL OUTPUT (BINARY)	DIGITAL OUTPUT (HEX)
+125	0000 0111 1101 0000	07D0h
+85*	0000 0101 0101 0000	0550h
+25.0625	0000 0001 1001 0001	0191h
+10.125	0000 0000 1010 0010	00A2h
+0.5	0000 0000 0000 1000	0008h
0	0000 0000 0000 0000	0000h
-0.5	1111 1111 1111 1000	FFF8h
-10.125	1111 1111 0101 1110	FF5Eh
-25.0625	1111 1110 0110 1111	FE6Fh
-55	1111 1100 1001 0000	FC90h

**The power-on reset value of the temperature register is +85°C.*

BIT 7	BIT 6	BIT 5	BIT 4	BIT 3	BIT 2	BIT 1	BIT 0
S	2^6	2^5	2^4	2^3	2^2	2^1	2^0

Figure 5. T_H and T_L Register Format

or equal to T_L or higher than or equal to T_H, an alarm condition exists and an alarm flag is set inside the DS18B20. This flag is updated after every temperature measurement; therefore, if the alarm condition goes away, the flag will be turned off after the next temperature conversion.

The master device can check the alarm flag status of all DS18B20s on the bus by issuing an Alarm Search [ECh] command. Any DS18B20s with a set alarm flag will respond to the command, so the master can determine exactly which DS18B20s have experienced an alarm condition. If an alarm condition exists and the T_H or T_L settings have changed, another temperature conversion should be done to validate the alarm condition.

Powering the DS18B20

The DS18B20 can be powered by an external supply on the V_{DD} pin, or it can operate in "parasite power" mode, which allows the DS18B20 to function without a local external supply. Parasite power is very useful for applications that require remote temperature sensing or that are very space constrained. Figure 3 shows the DS18B20's parasite-power control circuitry, which "steals" power from the 1-Wire bus via the DQ pin when the bus is high. The stolen charge powers the DS18B20 while the bus is high, and some of the charge is stored on the parasite power capacitor (C_{PP}) to provide power when the bus is low. When the DS18B20 is used in parasite power mode, the V_{DD} pin must be connected to ground.

In parasite power mode, the 1-Wire bus and CPP can provide sufficient current to the DS18B20 for most operations as long as the specified timing and voltage requirements are met (see the *DC Electrical Characteristics* and *AC Electrical Characteristics*). However, when the DS18B20 is performing temperature conversions or copying data from the scratchpad memory to EEPROM, the operating current can be as high as 1.5mA. This current can cause an unacceptable voltage drop across the weak 1-Wire pullup resistor and is more current than can be supplied by C_{PP}. To assure that the DS18B20 has sufficient supply current, it is necessary to provide a strong pullup on the 1-Wire bus whenever temperature conversions are taking place or data is being copied from the scratchpad to EEPROM. This can be accomplished by using a MOSFET to pull the bus directly to the rail as shown in Figure 6. The 1-Wire bus must be switched to the strong pullup within 10µs (max) after a Convert T [44h] or Copy Scratchpad [48h] command is issued, and the bus must be held high by the pullup for the duration of the conversion (t_{CONV}) or data transfer (t_{WR} = 10ms). No other activity can take place on the 1-Wire bus while the pullup is enabled.

The DS18B20 can also be powered by the conventional method of connecting an external power supply to the V_{DD} pin, as shown in Figure 7. The advantage of this method is that the MOSFET pullup is not required, and the 1-Wire bus is free to carry other traffic during the temperature conversion time.

The use of parasite power is not recommended for temperatures above +100°C since the DS18B20 may not be able to sustain communications due to the higher leakage currents that can exist at these temperatures. For applications in which such temperatures are likely, it is strongly recommended that the DS18B20 be powered by an external power supply.

In some situations the bus master may not know whether the DS18B20s on the bus are parasite powered or powered by external supplies. The master needs this information to determine if the strong bus pullup should be used during temperature conversions. To get this information, the master can issue a Skip ROM [CCh] command followed by a Read Power Supply [B4h] command followed by a "read time slot". During the read time slot, parasite powered DS18B20s will pull the bus low, and externally powered DS18B20s will let the bus remain high. If the bus is pulled low, the master knows that it must supply the strong pullup on the 1-Wire bus during temperature conversions.

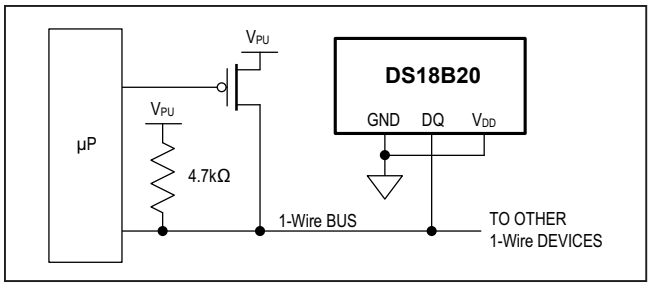

Figure 6. Supplying the Parasite-Powered DS18B20 During Temperature Conversions

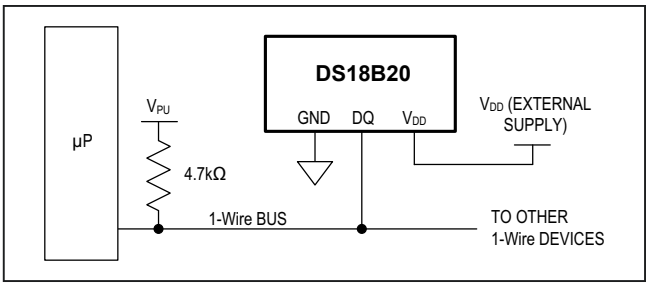

Figure 7. Powering the DS18B20 with an External Supply

64-BIT Lasered ROM code

Each DS18B20 contains a unique 64–bit code (see Figure 8) stored in ROM. The least significant 8 bits of the ROM code contain the DS18B20's 1-Wire family code: 28h. The next 48 bits contain a unique serial number. The most significant 8 bits contain a cyclic redundancy check (CRC) byte that is calculated from the first 56 bits of the ROM code. A detailed explanation of the CRC bits is provided in the *CRC Generation* section. The 64-bit ROM code and associated ROM function control logic allow the DS18B20 to operate as a 1-Wire device using the protocol detailed in the *1-Wire Bus System* section.

Memory

The DS18B20's memory is organized as shown in Figure 9. The memory consists of an SRAM scratchpad with nonvolatile EEPROM storage for the high and low alarm trigger registers (T_H and T_L) and configuration register. Note that if the DS18B20 alarm function is not used, the TH and TL registers can serve as general-purpose memory. All memory commands are described in detail in the *DS18B20 Function Commands* section.

Byte 0 and byte 1 of the scratchpad contain the LSB and the MSB of the temperature register, respectively. These bytes are read-only. Bytes 2 and 3 provide access to TH and TL registers. Byte 4 contains the configuration register data, which is explained in detail in the *Configuration Register* section. Bytes 5, 6, and 7 are reserved for internal use by the device and cannot be overwritten.

Byte 8 of the scratchpad is read-only and contains the CRC code for bytes 0 through 7 of the scratchpad. The DS18B20 generates this CRC using the method described in the *CRC Generation* section.

Data is written to bytes 2, 3, and 4 of the scratchpad using the Write Scratchpad [4Eh] command; the data must be transmitted to the DS18B20 starting with the least significant bit of byte 2. To verify data integrity, the scratchpad can be read (using the Read Scratchpad [BEh] command) after the data is written. When reading the scratchpad, data is transferred over the 1-Wire bus starting with the least significant bit of byte 0. To transfer the T_H, T_L and configuration data from the scratchpad to EEPROM, the master must issue the Copy Scratchpad [48h] command.

Data in the EEPROM registers is retained when the device is powered down; at power-up the EEPROM data is reloaded into the corresponding scratchpad locations. Data can also be reloaded from EEPROM to the scratchpad at any time using the Recall E^2 [B8h] command. The master can issue read time slots following the Recall E^2 command and the DS18B20 will indicate the status of the recall by transmitting 0 while the recall is in progress and 1 when the recall is done.

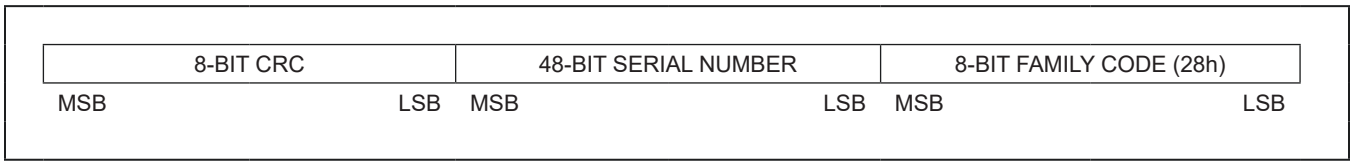

Figure 8. 64-Bit Lasered ROM Code

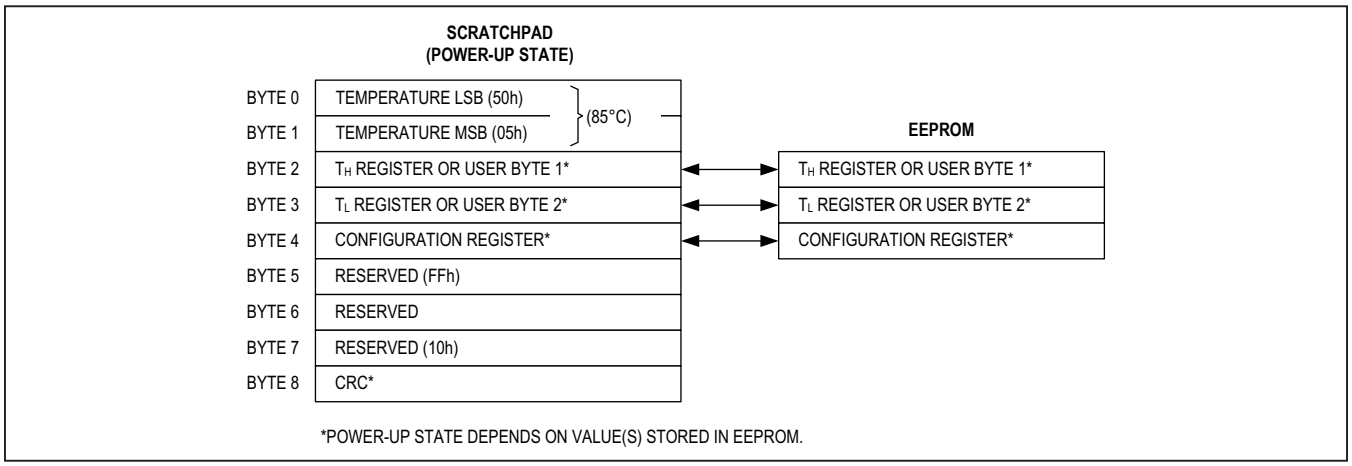

Figure 9. DS18B20 Memory Map

Configuration Register

Byte 4 of the scratchpad memory contains the configuration register, which is organized as illustrated in Figure 10. The user can set the conversion resolution of the DS18B20 using the R0 and R1 bits in this register as shown in Table 2. The power-up default of these bits is R0 = 1 and R1 = 1 (12-bit resolution). Note that there is a direct tradeoff between resolution and conversion time. Bit 7 and bits 0 to 4 in the configuration register are reserved for internal use by the device and cannot be overwritten.

CRC Generation

CRC bytes are provided as part of the DS18B20's 64-bit ROM code and in the 9th byte of the scratchpad memory. The ROM code CRC is calculated from the first 56 bits of the ROM code and is contained in the most significant byte of the ROM. The scratchpad CRC is calculated from the data stored in the scratchpad, and therefore it changes when the data in the scratchpad changes. The CRCs provide the bus master with a method of data validation when data is read from the DS18B20. To verify that data has been read correctly, the bus master must re-calculate the CRC from the received data and then compare this value to either the ROM code CRC (for ROM reads) or to the scratchpad CRC (for scratchpad reads). If the calculated CRC matches the read CRC, the data has been received error free. The comparison of CRC values and the decision to continue with an operation are determined entirely by the bus master. There is no circuitry inside the DS18B20 that prevents a command sequence from proceeding if the DS18B20 CRC (ROM or scratchpad) does not match the value generated by the bus master.

The equivalent polynomial function of the CRC (ROM or scratchpad) is:

$$CRC = X^8 + X^5 + X^4 + 1$$

The bus master can re-calculate the CRC and compare it to the CRC values from the DS18B20 using the polynomial generator shown in Figure 11. This circuit consists of a shift register and XOR gates, and the shift register bits are initialized to 0. Starting with the least significant bit of the ROM code or the least significant bit of byte 0 in the scratchpad, one bit at a time should shifted into the shift register. After shifting in the 56th bit from the ROM or the most significant bit of byte 7 from the scratchpad, the polynomial generator will contain the recalculated CRC. Next, the 8-bit ROM code or scratchpad CRC from the DS18B20 must be shifted into the circuit. At this point, if the re-calculated CRC was correct, the shift register will contain all 0s. Additional information about the Maxim 1-Wire cyclic redundancy check is available in *Application Note 27: Understanding and Using Cyclic Redundancy Checks with Maxim iButton Products*.

BIT 7	BIT 6	BIT 5	BIT 4	BIT 3	BIT 2	BIT 1	BIT 0
0	R1	R0	1	1	1	1	1

Figure 10. Configuration Register

Table 2. Thermometer Resolution Configuration

R1	R0	RESOLUTION (BITS)	MAX CONVERSION TIME	
0	0	9	93.75ms	($t_{CONV}/8$)
0	1	10	187.5ms	($t_{CONV}/4$)
1	0	11	375ms	($t_{CONV}/2$)
1	1	12	750ms	(t_{CONV})

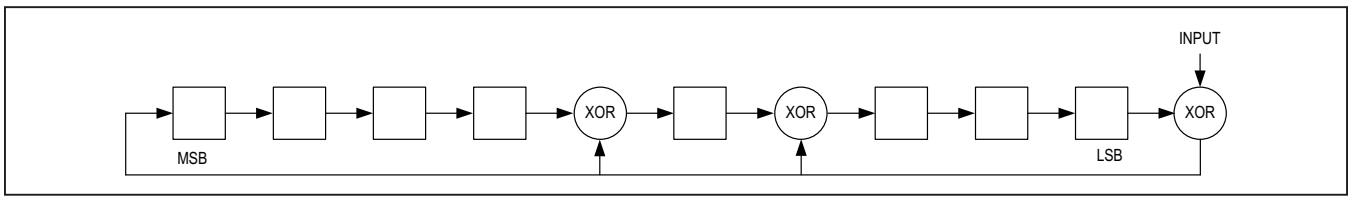

Figure 11. CRC Generator

1-Wire Bus System

The 1-Wire bus system uses a single bus master to control one or more slave devices. The DS18B20 is always a slave. When there is only one slave on the bus, the system is referred to as a “single-drop” system; the system is “multidrop” if there are multiple slaves on the bus.

All data and commands are transmitted least significant bit first over the 1-Wire bus.

The following discussion of the 1-Wire bus system is broken down into three topics: hardware configuration, transaction sequence, and 1-Wire signaling (signal types and timing).

Hardware Configuration

The 1-Wire bus has by definition only a single data line. Each device (master or slave) interfaces to the data line via an open-drain or 3-state port. This allows each device to “release” the data line when the device is not transmitting data so the bus is available for use by another device. The 1-Wire port of the DS18B20 (the DQ pin) is open drain with an internal circuit equivalent to that shown in Figure 12.

The 1-Wire bus requires an external pullup resistor of approximately 5kΩ; thus, the idle state for the 1-Wire bus is high. If for any reason a transaction needs to be suspended, the bus MUST be left in the idle state if the transaction is to resume. Infinite recovery time can occur between bits so long as the 1-Wire bus is in the inactive (high) state during the recovery period. If the bus is held low for more than 480µs, all components on the bus will be reset.

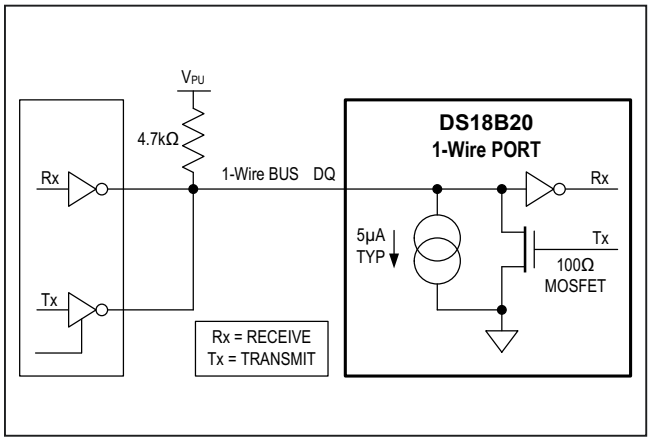

Figure 12. Hardware Configuration

Transaction Sequence

The transaction sequence for accessing the DS18B20 is as follows:

Step 1. Initialization

Step 2. ROM Command (followed by any required data exchange)

Step 3. DS18B20 Function Command (followed by any required data exchange)

It is very important to follow this sequence every time the DS18B20 is accessed, as the DS18B20 will not respond if any steps in the sequence are missing or out of order. Exceptions to this rule are the Search ROM [F0h] and Alarm Search [ECh] commands. After issuing either of these ROM commands, the master must return to Step 1 in the sequence.

Initialization

All transactions on the 1-Wire bus begin with an initialization sequence. The initialization sequence consists of a reset pulse transmitted by the bus master followed by presence pulse(s) transmitted by the slave(s). The presence pulse lets the bus master know that slave devices (such as the DS18B20) are on the bus and are ready to operate. Timing for the reset and presence pulses is detailed in the *1-Wire Signaling* section.

ROM Commands

After the bus master has detected a presence pulse, it can issue a ROM command. These commands operate on the unique 64-bit ROM codes of each slave device and allow the master to single out a specific device if many are present on the 1-Wire bus. These commands also allow the master to determine how many and what types of devices are present on the bus or if any device has experienced an alarm condition. There are five ROM commands, and each command is 8 bits long. The master device must issue an appropriate ROM command before issuing a DS18B20 function command. A flowchart for operation of the ROM commands is shown in Figure 13.

Search Rom [F0h]

When a system is initially powered up, the master must identify the ROM codes of all slave devices on the bus, which allows the master to determine the number of slaves and their device types. The master learns the ROM codes through a process of elimination that requires the master to perform a Search ROM cycle (i.e., Search ROM command followed by data exchange) as many times as necessary to identify all of the slave devices.

If there is only one slave on the bus, the simpler Read ROM [33h] command can be used in place of the Search ROM process. For a detailed explanation of the Search ROM procedure, refer to *Application Note 937: Book of iButton® Standards*. After every Search ROM cycle, the bus master must return to Step 1 (Initialization) in the transaction sequence.

Read Rom [33h]

This command can only be used when there is one slave on the bus. It allows the bus master to read the slave's 64-bit ROM code without using the Search ROM procedure. If this command is used when there is more than one slave present on the bus, a data collision will occur when all the slaves attempt to respond at the same time.

Match Rom [55H]

The match ROM command followed by a 64-bit ROM code sequence allows the bus master to address a specific slave device on a multidrop or single-drop bus. Only the slave that exactly matches the 64-bit ROM code sequence will respond to the function command issued by the master; all other slaves on the bus will wait for a reset pulse.

Skip Rom [CCh]

The master can use this command to address all devices on the bus simultaneously without sending out any ROM code information. For example, the master can make all DS18B20s on the bus perform simultaneous temperature conversions by issuing a Skip ROM command followed by a Convert T [44h] command.

Note that the Read Scratchpad [BEh] command can follow the Skip ROM command only if there is a single slave device on the bus. In this case, time is saved by allowing the master to read from the slave without sending the device's 64-bit ROM code. A Skip ROM command followed by a Read Scratchpad command will cause a data collision on the bus if there is more than one slave since multiple devices will attempt to transmit data simultaneously.

Alarm Search [ECh]

The operation of this command is identical to the operation of the Search ROM command except that only slaves with a set alarm flag will respond. This command allows the master device to determine if any DS18B20s experienced an alarm condition during the most recent temperature conversion. After every Alarm Search cycle (i.e., Alarm Search command followed by data exchange), the bus master must return to Step 1 (Initialization) in the transaction sequence. See the *Operation—Alarm Signaling* section for an explanation of alarm flag operation.

DS18B20 Function Commands

After the bus master has used a ROM command to address the DS18B20 with which it wishes to communicate, the master can issue one of the DS18B20 function commands. These commands allow the master to write to and read from the DS18B20's scratchpad memory, initiate temperature conversions and determine the power supply mode. The DS18B20 function commands, which are described below, are summarized in Table 3 and illustrated by the flowchart in Figure 14.

Convert T [44h]

This command initiates a single temperature conversion. Following the conversion, the resulting thermal data is stored in the 2-byte temperature register in the scratchpad memory and the DS18B20 returns to its low-power idle state. If the device is being used in parasite power mode, within 10µs (max) after this command is issued the master must enable a strong pullup on the 1-Wire bus for the duration of the conversion (t_{CONV}) as described in the *Powering the DS18B20* section. If the DS18B20 is powered by an external supply, the master can issue read time slots after the Convert T command and the DS18B20 will respond by transmitting a 0 while the temperature conversion is in progress and a 1 when the conversion is done. In parasite power mode this notification technique cannot be used since the bus is pulled high by the strong pullup during the conversion.

Write Scratchpad [4Eh]

This command allows the master to write 3 bytes of data to the DS18B20's scratchpad. The first data byte is written into the T_H register (byte 2 of the scratchpad), the second byte is written into the T_L register (byte 3), and the third byte is written into the configuration register (byte 4). Data must be transmitted least significant bit first. All three bytes MUST be written before the master issues a reset, or the data may be corrupted.

Read Scratchpad [BEh]

This command allows the master to read the contents of the scratchpad. The data transfer starts with the least significant bit of byte 0 and continues through the scratchpad until the 9th byte (byte 8 – CRC) is read. The master may issue a reset to terminate reading at any time if only part of the scratchpad data is needed.

iButton is a registered trademark of Maxim Integrated Products, Inc.

Copy Scratchpad [48h]

This command copies the contents of the scratchpad T_H, T_L and configuration registers (bytes 2, 3 and 4) to EEPROM. If the device is being used in parasite power mode, within 10µs (max) after this command is issued the master must enable a strong pullup on the 1-Wire bus for at least 10ms as described in the *Powering the DS18B20* section.

Recall E^2 [B8h]

This command recalls the alarm trigger values (T_H and T_L) and configuration data from EEPROM and places the data in bytes 2, 3, and 4, respectively, in the scratchpad memory. The master device can issue read time slots following the Recall E^2 command and the DS18B20 will indicate the status of the recall by transmitting 0 while the recall is in progress and 1 when the recall is done. The recall operation happens automatically at power-up, so valid data is available in the scratchpad as soon as power is applied to the device.

Read Power Supply [B4h]

The master device issues this command followed by a read time slot to determine if any DS18B20s on the bus are using parasite power. During the read time slot, parasite powered DS18B20s will pull the bus low, and externally powered DS18B20s will let the bus remain high. See the *Powering the DS18B20* section for usage information for this command.

Table 3. DS18B20 Function Command Set

COMMAND	DESCRIPTION	PROTOCOL	1-Wire BUS ACTIVITY AFTER COMMAND IS ISSUED	NOTES
TEMPERATURE CONVERSION COMMANDS				
Convert T	Initiates temperature conversion.	44h	DS18B20 transmits conversion status to master (not applicable for parasite-powered DS18B20s).	1
MEMORY COMMANDS				
Read Scratchpad	Reads the entire scratchpad including the CRC byte.	BEh	DS18B20 transmits up to 9 data bytes to master.	2
Write Scratchpad	Writes data into scratchpad bytes 2, 3, and 4 (T_H, T_L, and configuration registers).	4Eh	Master transmits 3 data bytes to DS18B20.	3
Copy Scratchpad	Copies T_H, T_L, and configuration register data from the scratchpad to EEPROM.	48h	None	1
Recall E^2	Recalls T_H, T_L, and configuration register data from EEPROM to the scratchpad.	B8h	DS18B20 transmits recall status to master.	
Read Power Supply	Signals DS18B20 power supply mode to the master.	B4h	DS18B20 transmits supply status to master.	

Note 1: For parasite-powered DS18B20s, the master must enable a strong pullup on the 1-Wire bus during temperature conversions and copies from the scratchpad to EEPROM. No other bus activity may take place during this time.
Note 2: The master can interrupt the transmission of data at any time by issuing a reset.
Note 3: All three bytes must be written before a reset is issued.

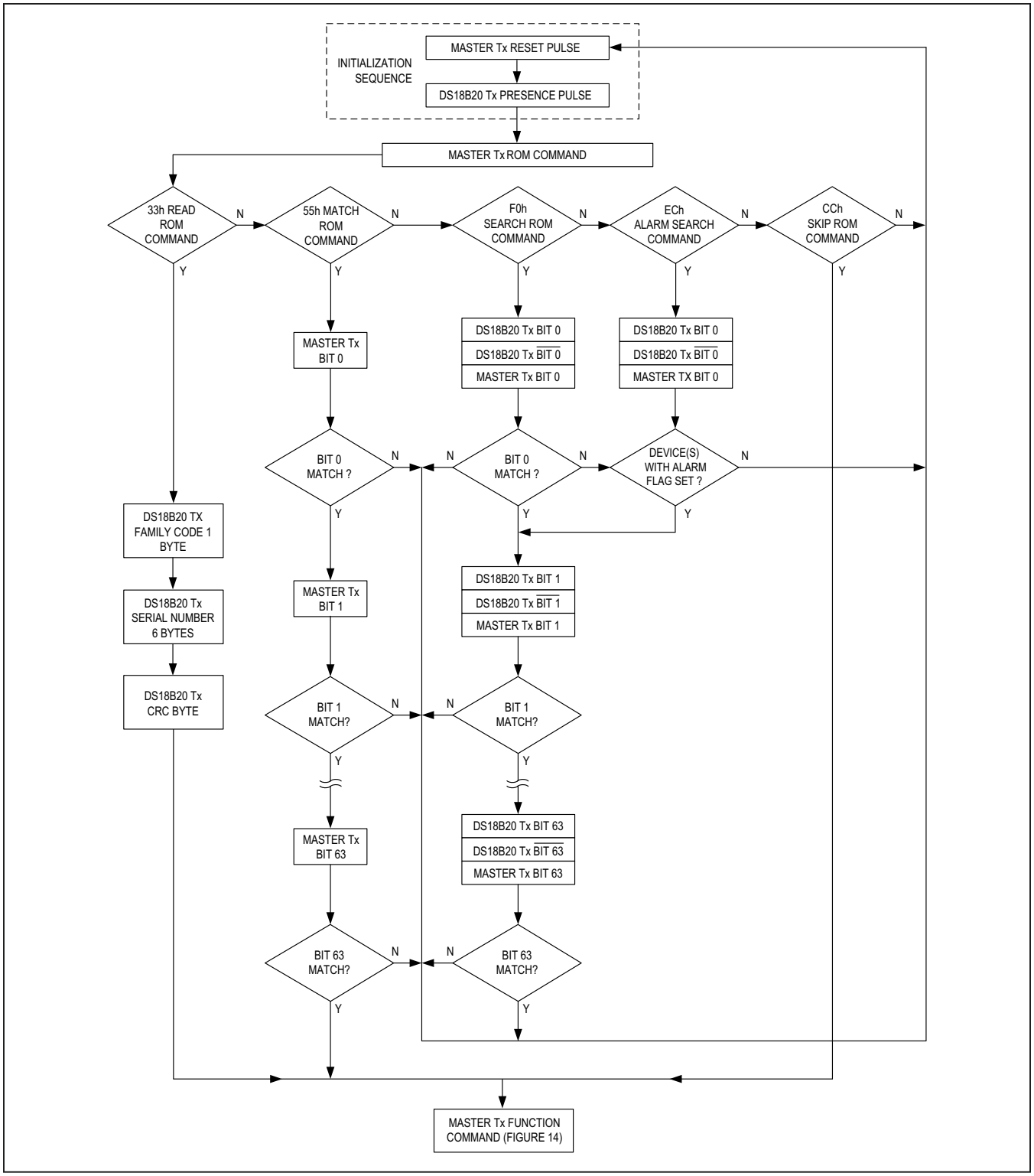

Figure 13. ROM Commands Flowchart

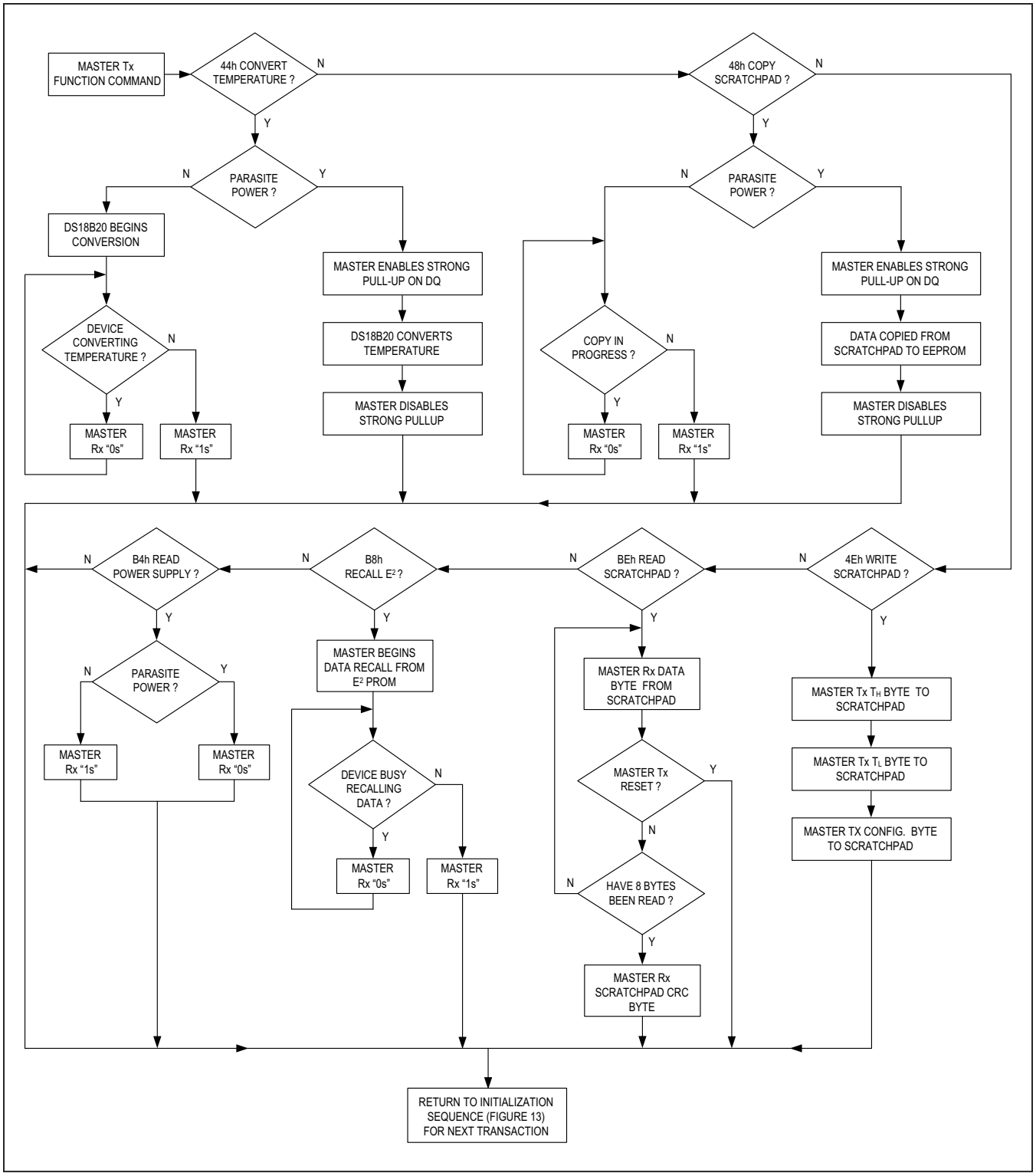

Figure 14. DS18B20 Function Commands Flowchart

1-Wire Signaling

The DS18B20 uses a strict 1-Wire communication protocol to ensure data integrity. Several signal types are defined by this protocol: reset pulse, presence pulse, write 0, write 1, read 0, and read 1. The bus master initiates all these signals, with the exception of the presence pulse.

Initialization Procedure—Reset And Presence Pulses

All communication with the DS18B20 begins with an initialization sequence that consists of a reset pulse from the master followed by a presence pulse from the DS18B20. This is illustrated in Figure 15. When the DS18B20 sends the presence pulse in response to the reset, it is indicating to the master that it is on the bus and ready to operate.

During the initialization sequence the bus master transmits (T_X) the reset pulse by pulling the 1-Wire bus low for a minimum of 480µs. The bus master then releases the bus and goes into receive mode (R_X). When the bus is released, the 5kΩ pullup resistor pulls the 1-Wire bus high. When the DS18B20 detects this rising edge, it waits 15µs to 60µs and then transmits a presence pulse by pulling the 1-Wire bus low for 60µs to 240µs.

Read/Write Time Slots

The bus master writes data to the DS18B20 during write time slots and reads data from the DS18B20 during read time slots. One bit of data is transmitted over the 1-Wire bus per time slot.

Write Time Slots

There are two types of write time slots: “Write 1” time slots and “Write 0” time slots. The bus master uses a Write 1 time slot to write a logic 1 to the DS18B20 and a Write 0 time slot to write a logic 0 to the DS18B20. All write time slots must be a minimum of 60µs in duration with a minimum of a 1µs recovery time between individual write slots. Both types of write time slots are initiated by the master pulling the 1-Wire bus low (see Figure 14).

To generate a Write 1 time slot, after pulling the 1-Wire bus low, the bus master must release the 1-Wire bus within 15µs. When the bus is released, the 5kΩ pullup resistor will pull the bus high. To generate a Write 0 time slot, after pulling the 1-Wire bus low, the bus master must continue to hold the bus low for the duration of the time slot (at least 60µs).

The DS18B20 samples the 1-Wire bus during a window that lasts from 15µs to 60µs after the master initiates the write time slot. If the bus is high during the sampling window, a 1 is written to the DS18B20. If the line is low, a 0 is written to the DS18B20.

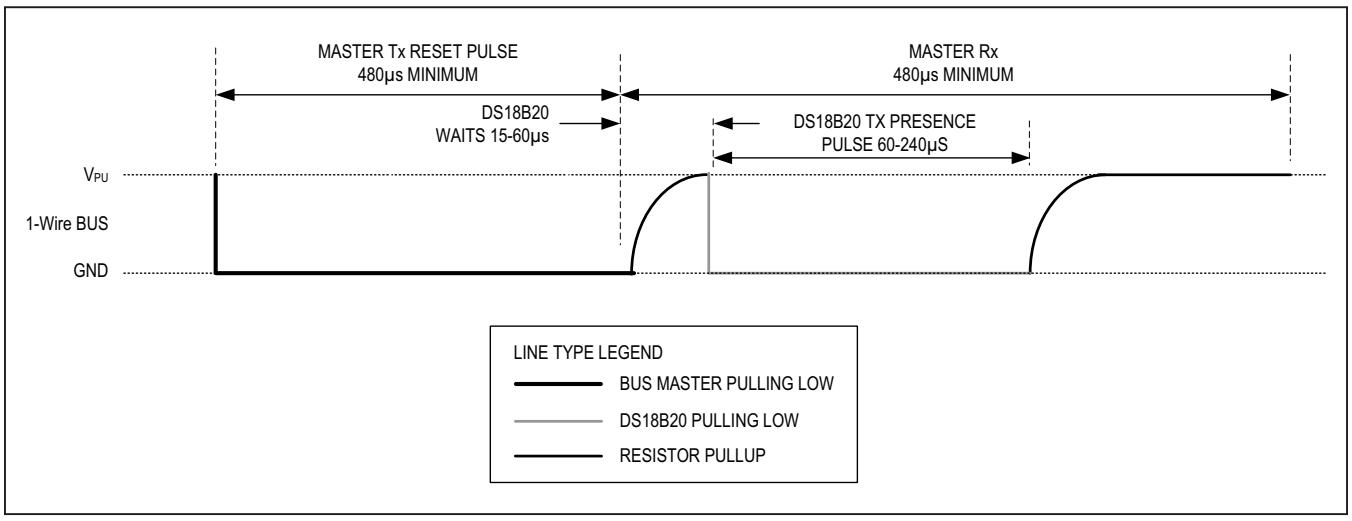

Figure 15. Initialization Timing

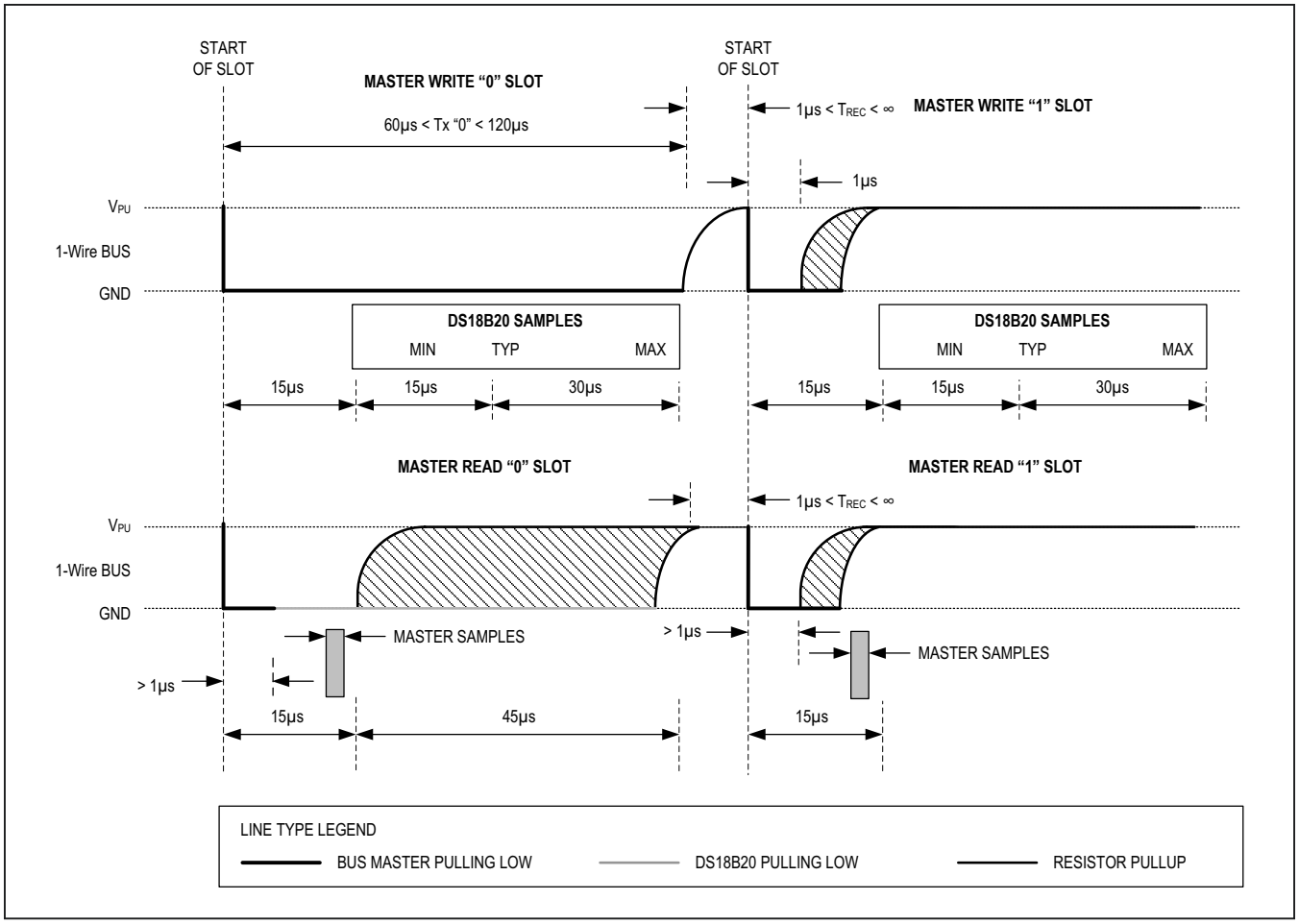

Figure 16. Read/Write Time Slot Timing Diagram

Read Time Slots

The DS18B20 can only transmit data to the master when the master issues read time slots. Therefore, the master must generate read time slots immediately after issuing a Read Scratchpad [BEh] or Read Power Supply [B4h] command, so that the DS18B20 can provide the requested data. In addition, the master can generate read time slots after issuing Convert T [44h] or Recall E^2 [B8h] commands to find out the status of the operation as explained in the *DS18B20 Function Commands* section.

All read time slots must be a minimum of 60µs in duration with a minimum of a 1µs recovery time between slots. A read time slot is initiated by the master device pulling the 1-Wire bus low for a minimum of 1µs and then releasing the bus (see Figure 16). After the master initiates the read time slot, the DS18B20 will begin transmitting a 1 or 0 on bus. The DS18B20 transmits a 1 by leaving the bus high and transmits a 0 by pulling the bus low. When transmitting a 0, the DS18B20 will release the bus by the end of the time slot, and the bus will be pulled back to its high idle state by the pullup resister. Output data from the DS18B20 is valid for 15µs after the falling edge that initiated the read time slot. Therefore, the master must release the bus and then sample the bus state within 15µs from the start of the slot.

Figure 17 illustrates that the sum of T_{INIT}, T_{RC}, and T_{SAMPLE} must be less than 15µs for a read time slot. Figure 18 shows that system timing margin is maximized by keeping T_{INIT} and T_{RC} as short as possible and by locating the master sample time during read time slots towards the end of the 15µs period.

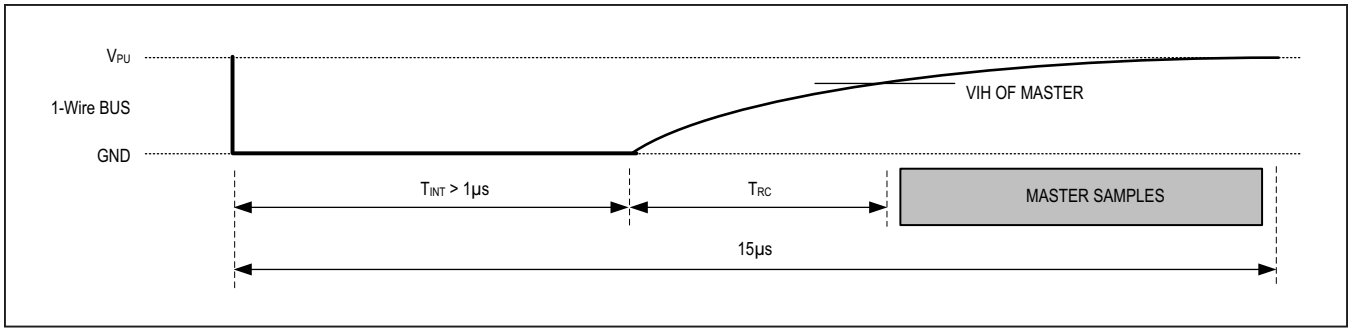

Figure 17. Detailed Master Read 1 Timing

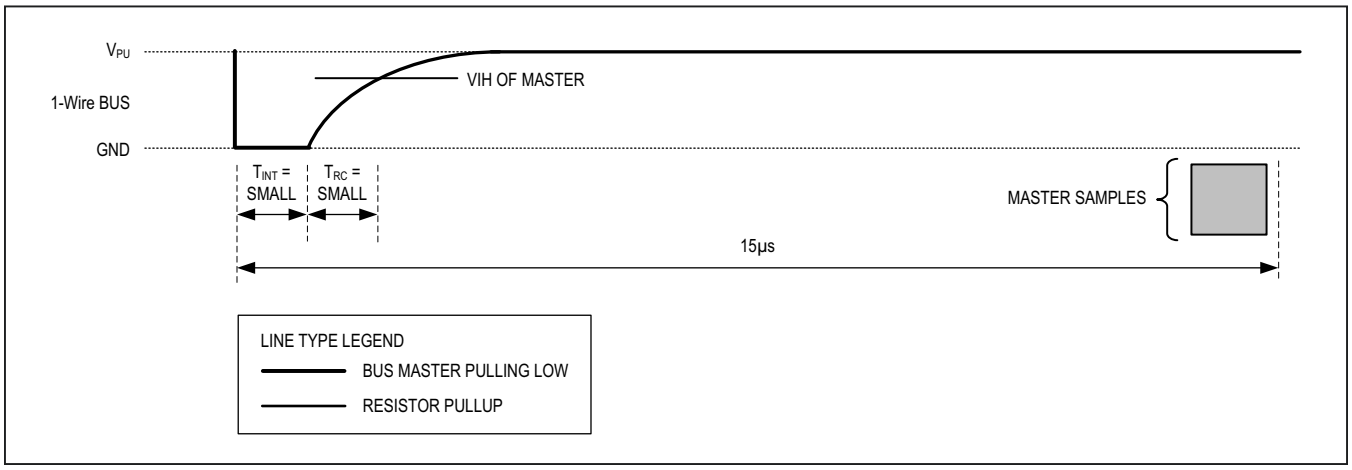

Figure 18. Recommended Master Read 1 Timing

Related Application Notes

The following application notes can be applied to the DS18B20 and are available at **www.maximintegrated.com**.

Application Note 27: Understanding and Using Cyclic Redundancy Checks with Maxim iButton Products

Application Note 122: Using Dallas' 1-Wire ICs in 1-Cell Li-Ion Battery Packs with Low-Side N-Channel Safety FETs Master

Application Note 126: 1-Wire Communication Through Software

Application Note 162: Interfacing the DS18x20/DS1822 1-Wire Temperature Sensor in a Microcontroller Environment

Application Note 208: Curve Fitting the Error of a Bandgap-Based Digital Temperature Sensor

Application Note 2420: 1-Wire Communication with a Microchip PICmicro Microcontroller

Application Note 3754: Single-Wire Serial Bus Carries Isolated Power and Data

Sample 1-Wire subroutines that can be used in conjunction with A*pplication Note 74: Reading and Writing iButtons via Serial Interfaces* can be downloaded from the Maxim website.

DS18B20 Operation Example 1

In this example there are multiple DS18B20s on the bus and they are using parasite power. The bus master initiates a temperature conversion in a specific DS18B20 and then reads its scratchpad and recalculates the CRC to verify the data.

MASTER MODE	DATA (LSB FIRST)	COMMENTS
Tx	Reset	Master issues reset pulse.
Rx	Presence	DS18B20s respond with presence pulse.
Tx	55h	Master issues Match ROM command.
Tx	64-bit ROM code	Master sends DS18B20 ROM code.
Tx	44h	Master issues Convert T command.
Tx	DQ line held high by strong pullup	Master applies strong pullup to DQ for the duration of the conversion (t_{CONV}).
Tx	Reset	Master issues reset pulse.
Rx	Presence	DS18B20s respond with presence pulse.
Tx	55h	Master issues Match ROM command.
Tx	64-bit ROM code	Master sends DS18B20 ROM code.
Tx	BEh	Master issues Read Scratchpad command.
Rx	9 data bytes	Master reads entire scratchpad including CRC. The master then recalculates the CRC of the first eight data bytes from the scratchpad and compares the calculated CRC with the read CRC (byte 9). If they match, the master continues; if not, the read operation is repeated.

DS18B20 Operation Example 2

In this example there is only one DS18B20 on the bus and it is using parasite power. The master writes to the TH, TL, and configuration registers in the DS18B20 scratchpad and then reads the scratchpad and recalculates the CRC to verify the data. The master then copies the scratchpad contents to EEPROM.

MASTER MODE	DATA (LSB FIRST)	COMMENTS
Tx	Reset	Master issues reset pulse.
Rx	Presence	DS18B20 responds with presence pulse.
Tx	CCh	Master issues Skip ROM command.
Tx	4Eh	Master issues Write Scratchpad command.
Tx	3 data bytes	Master sends three data bytes to scratchpad (T_H, T_L, and config).
Tx	Reset	Master issues reset pulse.
Rx	Presence	DS18B20 responds with presence pulse.
Tx	CCh	Master issues Skip ROM command.
Tx	BEh	Master issues Read Scratchpad command.
Rx	9 data bytes	Master reads entire scratchpad including CRC. The master then recalculates the CRC of the first eight data bytes from the scratchpad and compares the calculated CRC with the read CRC (byte 9). If they match, the master continues; if not, the read operation is repeated.
Tx	Reset	Master issues reset pulse.
Rx	Presence	DS18B20 responds with presence pulse.
Tx	CCh	Master issues Skip ROM command.
Tx	48h	Master issues Copy Scratchpad command.
Tx	DQ line held high by strong pullup	Master applies strong pullup to DQ for at least 10ms while copy operation is in progress.

Ordering Information

PART	TEMP RANGE	PIN-PACKAGE	TOP MARK
DS18B20	-55°C to +125°C	3 TO-92	18B20
DS18B20+	-55°C to +125°C	3 TO-92	18B20
DS18B20/T&R	-55°C to +125°C	3 TO-92 (2000 Piece)	18B20
DS18B20+T&R	-55°C to +125°C	3 TO-92 (2000 Piece)	18B20
DS18B20-SL/T&R	-55°C to +125°C	3 TO-92 (2000 Piece)*	18B20
DS18B20-SL+T&R	-55°C to +125°C	3 TO-92 (2000 Piece)*	18B20
DS18B20U	-55°C to +125°C	8 FSOP	18B20
DS18B20U+	-55°C to +125°C	8 FSOP	18B20
DS18B20U/T&R	-55°C to +125°C	8 FSOP (3000 Piece)	18B20
DS18B20U+T&R	-55°C to +125°C	8 FSOP (3000 Piece)	18B20
DS18B20Z	-55°C to +125°C	8 SO	DS18B20
DS18B20Z+	-55°C to +125°C	8 SO	DS18B20
DS18B20Z/T&R	-55°C to +125°C	8 SO (2500 Piece)	DS18B20
DS18B20Z+T&R	-55°C to +125°C	8 SO (2500 Piece)	DS18B20

+Denotes a lead-free package. A "+" will appear on the top mark of lead-free packages.

T&R = Tape and reel.

**TO-92 packages in tape and reel can be ordered with straight or formed leads. Choose "SL" for straight leads. Bulk TO-92 orders are straight leads only.*

Revision History

REVISION DATE	DESCRIPTION	PAGES CHANGED
030107	In the Absolute Maximum Ratings section, removed the reflow oven temperature value of +220°C. Reference to JEDEC specification for reflow remains.	19
101207	In the *Operation—Alarm Signaling* section, added “or equal to” in the description for a TH alarm condition	5
	In the *Memory* section, removed incorrect text describing memory.	7
	In the *Configuration Register* section, removed incorrect text describing configuration register.	8
042208	In the *Ordering Information* table, added TO-92 straight-lead packages and included a note that the TO-92 package in tape and reel can be ordered with either formed or straight leads.	2
1/15	Updated *Benefits and Features* section	1
09/18	Updated *DC Electrical Characteristics* table	2

For pricing, delivery, and ordering information, please visit Maxim Integrated’s online storefront at https://www.maximintegrated.com/en/storefront/storefront.html.

Maxim Integrated cannot assume responsibility for use of any circuitry other than circuitry entirely embodied in a Maxim Integrated product. No circuit patent licenses are implied. Maxim Integrated reserves the right to change the circuitry and specifications without notice at any time. The parametric values (min and max limits) shown in the Electrical Characteristics table are guaranteed. Other parametric values quoted in this data sheet are provided for guidance.

Maxim Integrated and the Maxim Integrated logo are trademarks of Maxim Integrated Products, Inc. © 2018 Maxim Integrated Products, Inc.

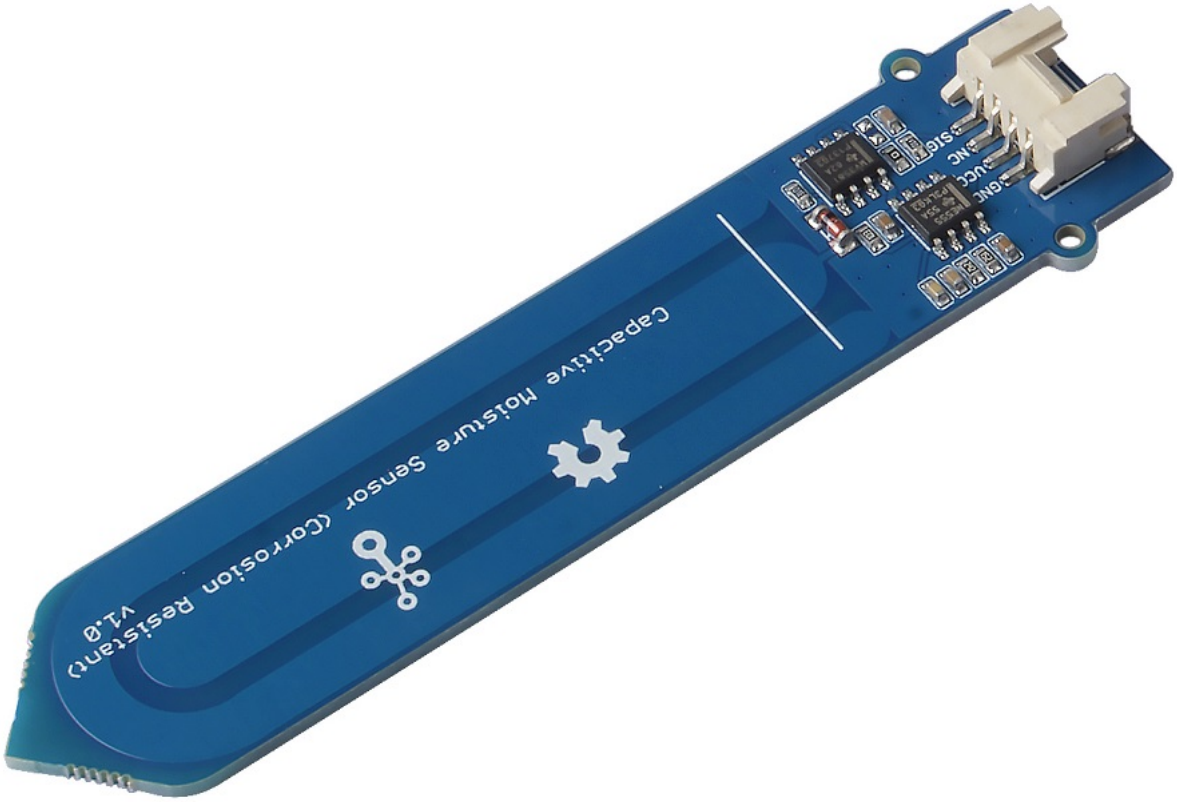

The Grove - Capacitive Moisture Sensor (Corrosion Resistant) is a soil moisture sensor based on capacitance changes. Compared with resistive sensors, capacitive sensors do not require direct exposure of the metal electrodes, which can significantly reduce the erosion of the electrodes. Hence, we call it **Corrosion Resistant**.

It is important to note that this sensor can only qualitatively test the humidity of the soil and cannot measure quantitatively. Which means when the humidity of the soil rises, the value of the output decreases; conversely, when the humidity decreases, the output value becomes higher.

Get One Now

Version

Product Version	Changes	Released Date
Grove - Capacitive Moisture Sensor (Corrosion Resistant)	Initial	Sep 2018

Feature

- Capacitive Style
- Corrosion Resistant
- Built-in Amplifier

Specification

Item	Value
Operating Voltage	3.3V / 5V
Output Interface	Analog
Length	92.1mm
Width	23.5mm
Height	6.5mm
size	L: 40mm W: 20mm H: 13mm
Weight	10.6g
Package size	L: 150mm W: 100mm H: 15mm

Item	Value
Gross Weight	19g

Typical Applications

- Soil moisture detection
- Automatic watering of plants

Hardware Overview

Pin Out

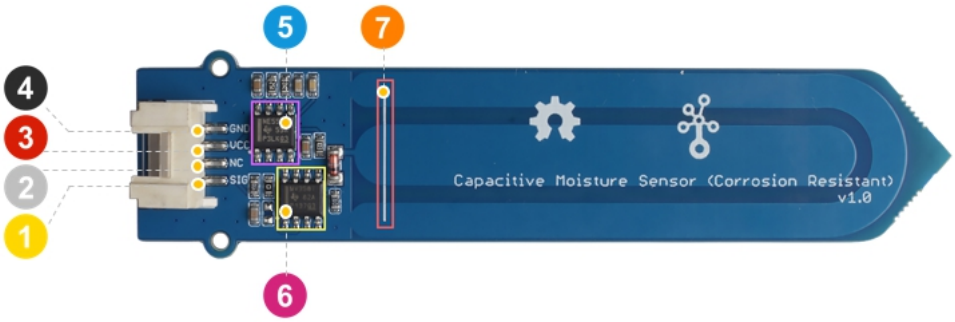

4 GND: connect this module to the system GND
3 VCC: you can use 5V or 3.3V for this module
2 NC: not connected
1 SIG: analog output
5 NE555DR IC
6 LMV358ID IC Operational Amplifier
7 Highest position line

!!!Attention The part of the sensor inserted into the soil cannot exceed the highest position line.

Platforms Supported

Arduino	Raspberry Pi	BeagleBone	Wio	LinkIt ON
		TO DO	TO DO	

!!!Caution The platforms mentioned above as supported is/are an indication of the module's hardware or theoritical compatibility. We only provide software library or code examples for Arduino platform in most cases. It is not possible to provide software library / demo code for all possible MCU platforms. Hence, users have to write their own software library.To do means not be supported now, may or may not be supported in the future.

Getting Started

Play With Arduino

Hardware

Materials required

Seeeduino V4.2	Base Shield	Grove - Capacitive Moisture Sensor
Get One Now	Get One Now	Get One Now

!!!note **1** Please plug the USB cable gently, otherwise you may damage the port. Please use the USB cable with 4 wires inside, the 2 wires cable can't transfer data. If you are not sure about the wire you have, you can click here to buy

```
**2** Each Grove module comes with a Grove cable when you buy. In case you lose the Grove cable, you can click [here]
(https://www.seeedstudio.com/Grove-Universal-4-Pin-Buckled-20cm-Cable-%285-PCs-pack%29-p-936.html) to buy.
```

!!!important **1**. If the you uses Arduino UNO as the motherboard, it is recommended that use the DC power supply. Otherwise, the maximum ripple of VCC may exceed 100mV. If you use Seeeduino V4.2 as the motherboard, you do not need to connect DC power.

```
**2**. Hot swap is not supported.
```

- **Step 1.** Connect the Grove - Capacitive Moisture Sensor to port **A0** of Grove-Base Shield.
- **Step 2.** Plug Grove - Base Shield into Seeeduino.
- **Step 3.** Insert the Grove - Capacitive Moisture Sensor into the soil to be tested.

!!!Attention The part of the sensor inserted into the soil cannot exceed this white line.

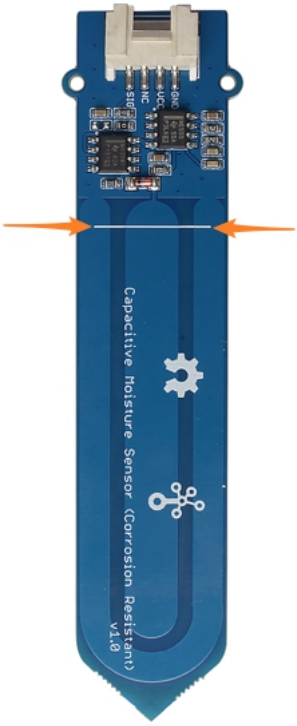

- **Step 4.** Connect Seeeduino to PC via a USB cable.

!!!Note If we don't have Grove Base Shield, We also can directly connect this module to Seeeduino as below.

Seeeduino	Grove Cable	Grove - Capacitive Moisture Sensor
GND	Black	GND
5V or 3.3V	Red	VCC
Not connection	White	NC
A0	Yellow	SIG

Software

!!!Attention If this is the first time you work with Arduino, we strongly recommend you to see Getting Started with Arduino before the start.

Step 1. Copy the code below, and download it to your arduino. If you do not know how to upload the code, please check How to upload code.

```
/*
  AnalogReadSerial

  Reads an analog input on pin 0, prints the result to the Serial Monitor.
  Graphical representation is available using Serial Plotter (Tools > Serial Plotter menu).
  Attach the center pin of a potentiometer to pin A0, and the outside pins to +5V and ground.

  This example code is in the public domain.

  https://arduino.cc/en/Tutorial/AnalogReadSerial
*/

// the setup routine runs once when you press reset:
void setup() {
  // initialize serial communication at 9600 bits per second:
  Serial.begin(9600);
}

// the loop routine runs over and over again forever:
void loop() {
  // read the input on analog pin 0:
  int sensorValue = analogRead(A0);
  // print out the value you read:
```

```
  Serial.println(sensorValue);
  delay(100);        // delay in between reads for stability
}
```

- **Step 2.** Open the **Serial Monitor** of Arduino IDE by click **Tool-> Serial Monitor**. Or tap the ++ctrl+shift+m++ key at the same time. Set the baud rate to **9600**.

!!!Success If every thing goes well, when you open the Serial Monitor it may show as below:

```
678
663
631
615
615
624
616
618
620
616
614
614
610
614
614
616
615
612
605
```

!!!Attention Due to individual differences in components, different module measurements in the same environment may vary.

Play with Raspberry Pi

If you want to use this module with Raspberry Pi, you may need to use any of the following hat:

- 4-Channel 16-Bit ADC for Raspberry Pi(ADS1115)
- 8-Channel 12-Bit ADC for Raspberry Pi (STM32F030).html)
- Grove Base Hat for Raspberry Pi
- Grove Base Hat for Raspberry Pi Zero

And you can find the demo in the wiki of those hats.

Schematic Online Viewer

Resources

- **[Zip]** Grove - Capacitive Moisture Sensor (Corrosion Resistant) Eagle Files.zip)
- **[PDF]** NE555DR Datasheet
- **[PDF]** PDF Format Wiki

Tech Support

Please do not hesitate to submit the issue into our forum

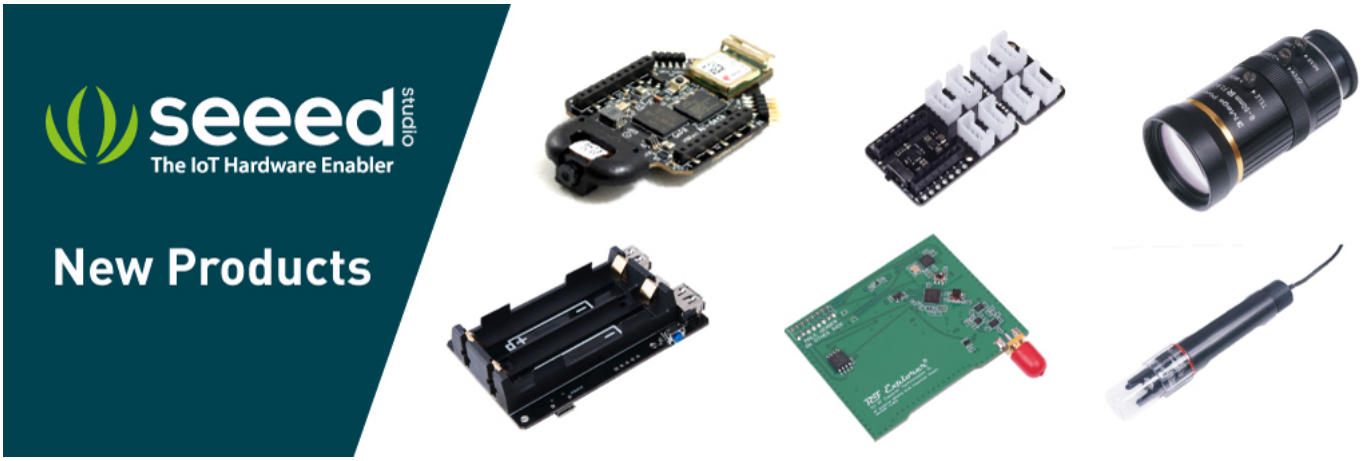

Capacity	kg	40-50
Comprehensive Error	mv/v	0.05
Output Sensitivity	mv/v	1.0±0.1
Nonlinearity	%FS	0.03
Repeatability	%FS	0.03
Hysteresis	%FS	0.03
Creep	(3min)%FS	0.03
Zero Drift	(1min)%FS	0.03
Temp. Effect on Zero	%FS/10℃	1
Temp. Effect on Output	%FS/10℃	0.05
Zero Output	mV/V	±0.1
Input Resistance	Ω	1000±20
Output Resistance	Ω	1000±20
Insulation Resistance	MΩ	≥5000
Excitation Voltage	V	≤10
Operation Temp. Range	℃	0--+50
Overload Capacity	%FS	150

24-Bit Analog-to-Digital Converter (ADC) for Weigh Scales

DESCRIPTION

Based on Avia Semiconductor's patented technology, HX711 is a precision 24-bit analog-to-digital converter (ADC) designed for weigh scales and industrial control applications to interface directly with a bridge sensor.

The input multiplexer selects either Channel A or B differential input to the low-noise programmable gain amplifier (PGA). Channel A can be programmed with a gain of 128 or 64, corresponding to a full-scale differential input voltage of ±20mV or ±40mV respectively, when a 5V supply is connected to AVDD analog power supply pin. Channel B has a fixed gain of 32. On-chip power supply regulator eliminates the need for an external supply regulator to provide analog power for the ADC and the sensor. Clock input is flexible. It can be from an external clock source, a crystal, or the on-chip oscillator that does not require any external component. On-chip power-on-reset circuitry simplifies digital interface initialization.

There is no programming needed for the internal registers. All controls to the HX711 are through the pins.

FEATURES

- **Two selectable differential input channels**
- **On-chip active low noise PGA with selectable gain of 32, 64 and 128**
- **On-chip power supply regulator for load-cell and ADC analog power supply**
- **On-chip oscillator requiring no external component with optional external crystal**
- **On-chip power-on-reset**
- **Simple digital control and serial interface: pin-driven controls, no programming needed**
- **Selectable 10SPS or 80SPS output data rate**
- **Simultaneous 50 and 60Hz supply rejection**
- **Current consumption including on-chip analog power supply regulator: normal operation < 1.5mA, power down < 1uA**
- **Operation supply voltage range: 2.6 ~ 5.5V**
- **Operation temperature range: -40 ~ +85℃**
- **16 pin SOP-16 package**

APPLICATIONS

- **Weigh Scales**
- **Industrial Process Control**

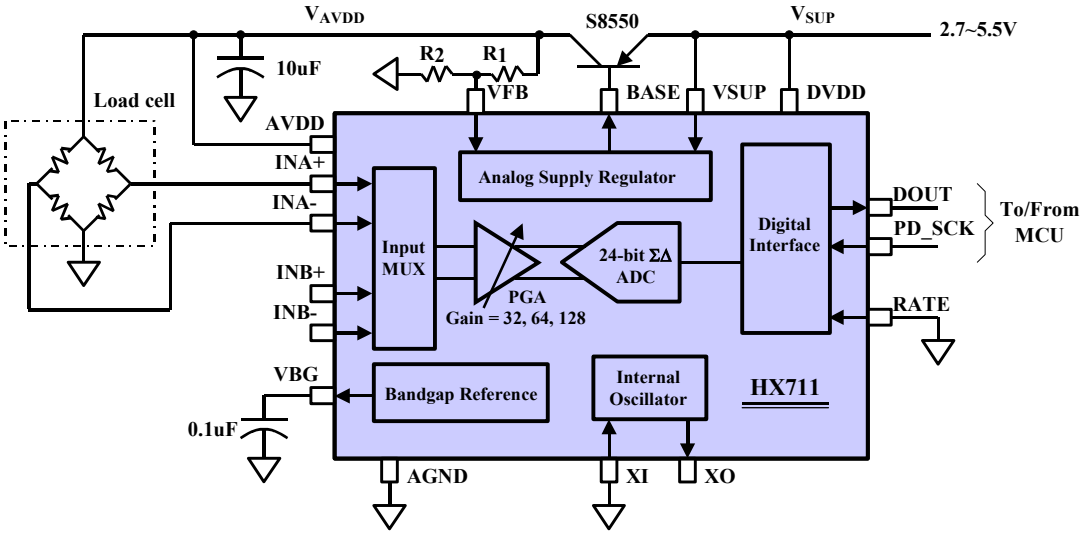

Fig. 1 Typical weigh scale application block diagram

Pin Description

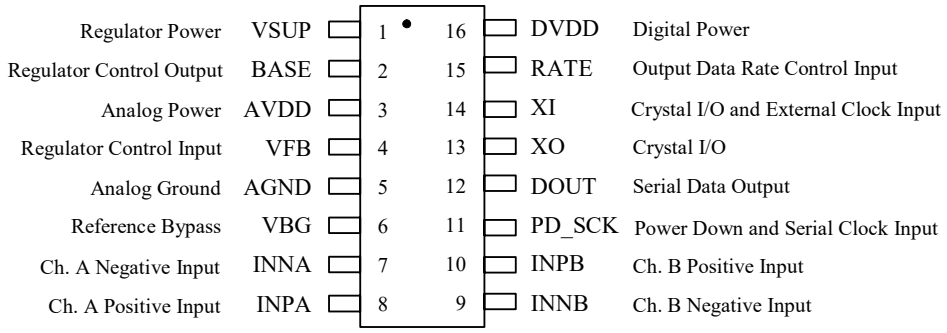

SOP-16L Package

Pin #	Name	Function	Description
1	VSUP	Power	Regulator supply: 2.7 ~ 5.5V
2	BASE	Analog Output	Regulator control output（NC when not used）
3	AVDD	Power	Analog supply: 2.6 ~ 5.5V
4	VFB	Analog Input	Regulator control input（connect to AGND when not used）
5	AGND	Ground	Analog Ground
6	VBG	Analog Output	Reference bypass output
7	INA-	Analog Input	Channel A negative input
8	INA+	Analog Input	Channel A positive input
9	INB-	Analog Input	Channel B negative input
10	INB+	Analog Input	Channel B positive input
11	PD_SCK	Digital Input	Power down control (high active) and serial clock input
12	DOUT	Digital Output	Serial data output
13	XO	Digital I/O	Crystal I/O (NC when not used）
14	XI	Digital Input	Crystal I/O or external clock input, 0: use on-chip oscillator
15	RATE	Digital Input	Output data rate control, 0: 10Hz; 1: 80Hz
16	DVDD	Power	Digital supply: 2.6 ~ 5.5V

Table 1 Pin Description

KEY ELECTRICAL CHARACTERISTICS

Parameter	Notes	MIN	TYP	MAX	UNIT
Full scale differential input range	V(inp)-V(inn)		±0.5(AVDD/GAIN)		V
Common mode input		AGND+1.2		AVDD-1.3	V
Output data rate	Internal Oscillator, RATE = 0		10		Hz
	Internal Oscillator, RATE = DVDD		80		
	Crystal or external clock, RATE = 0		f_{clk}/1,105,920		
	Crystal or external clock, RATE = DVDD		f_{clk}/138,240		
Output data coding	2's complement	800000		7FFFFF	HEX
Output settling time (1)	RATE = 0		400		ms
	RATE = DVDD		50		
Input offset drift	Gain = 128		0.2		mV
	Gain = 64		0.4		
Input noise	Gain = 128， RATE = 0		50		nV(rms)
	Gain = 128， RATE = DVDD		90		
Temperature drift	Input offset（Gain = 128）		±6		nV/℃
	Gain（Gain = 128）		±5		ppm/℃
Input common mode rejection	Gain = 128， RATE = 0		100		dB
Power supply rejection	Gain = 128， RATE = 0		100		dB
Reference bypass（V_{BG}）			1.25		V
Crystal or external clock frequency		1	11.0592	20	MHz
Power supply voltage	DVDD	2.6		5.5	V
	AVDD，VSUP	2.6		5.5	
Analog supply current (including regulator)	Normal		1400		μA
	Power down		0.3		
Digital supply current	Normal		100		μA
	Power down		0.2		

（1）Settling time refers to the time from power up, reset, input channel change and gain change to valid stable output data.

Table 2 Key Electrical Characteristics

Analog Inputs

Channel A differential input is designed to interface directly with a bridge sensor's differential output. It can be programmed with a gain of 128 or 64. The large gains are needed to accommodate the small output signal from the sensor. When 5V supply is used at the AVDD pin, these gains correspond to a full-scale differential input voltage of ±20mV or ±40mV respectively.

Channel B differential input has a fixed gain of 32. The full-scale input voltage range is ±80mV, when 5V supply is used at the AVDD pin.

Power Supply Options

Digital power supply (DVDD) should be the same power supply as the MCU power supply.

When using internal analog supply regulator, the dropout voltage of the regulator depends on the external transistor used. The output voltage is equal to $V_{AVDD}=V_{BG}*(R1+R2)/ R1$ (Fig. 1). This voltage should be designed with a minimum of 100mV below VSUP voltage.

If the on-chip analog supply regulator is not used, the VSUP pin should be connected to either AVDD or DVDD, depending on which voltage is higher. Pin VFB should be connected to Ground and pin BASE becomes NC. The external 0.1uF bypass capacitor shown on Fig. 1 at the VBG output pin is then not needed.

Clock Source Options

By connecting pin XI to Ground, the on-chip oscillator is activated. The nominal output data rate when using the internal oscillator is 10 (RATE=0) or 80SPS (RATE=1).

If accurate output data rate is needed, crystal or external reference clock can be used. A crystal can be directly connected across XI and XO pins. An external clock can be connected to XI pin, through a 20pF ac coupled capacitor. This external clock is not required to be a square wave. It can come directly from the crystal output pin of the MCU chip, with amplitude as low as 150 mV.

When using a crystal or an external clock, the internal oscillator is automatically powered down.

Output Data Rate and Format

When using the on-chip oscillator, output data rate is typically 10 (RATE=0) or 80SPS (RATE=1).

When using external clock or crystal, output data rate is directly proportional to the clock or crystal frequency. Using 11.0592MHz clock or crystal results in an accurate 10 (RTE=0) or 80SPS (RATE=1) output data rate.

The output 24 bits of data is in 2's complement format. When input differential signal goes out of the 24 bit range, the output data will be saturated at 800000h (MIN) or 7FFFFFh (MAX), until the input signal comes back to the input range.

Serial Interface

Pin PD_SCK and DOUT are used for data retrieval, input selection, gain selection and power down controls.

When output data is not ready for retrieval, digital output pin DOUT is high. Serial clock input PD_SCK should be low. When DOUT goes to low, it indicates data is ready for retrieval. By applying 25~27 positive clock pulses at the PD_SCK pin, data is shifted out from the DOUT output pin. Each PD_SCK pulse shifts out one bit, starting with the MSB bit first, until all 24 bits are shifted out. The 25th pulse at PD_SCK input will pull DOUT pin back to high (Fig.2).

Input and gain selection is controlled by the number of the input PD_SCK pulses (Table 3). PD_SCK clock pulses should not be less than 25 or more than 27 within one conversion period, to avoid causing serial communication error.

PD_SCK Pulses	Input channel	Gain
25	A	128
26	B	32
27	A	64

Table 3 Input Channel and Gain Selection

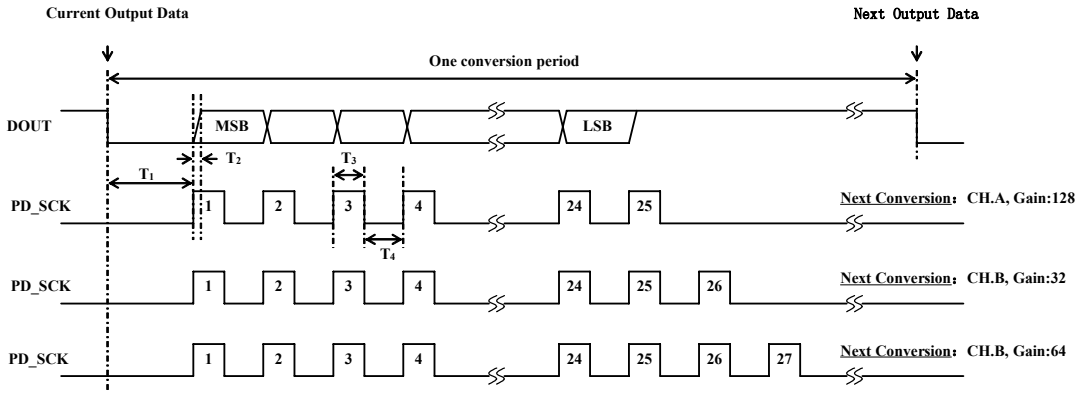

Fig.2 Data output, input and gain selection timing and control

Symbol	Note	MIN	TYP	MAX	Unit
T_1	DOUT falling edge to PD_SCK rising edge	0.1			μs
T_2	PD_SCK rising edge to DOUT data ready			0.1	μs
T_3	PD_SCK high time	0.2	1	50	μs
T_4	PD_SCK low time	0.2	1		μs

Reset and Power-Down

When chip is powered up, on-chip power on rest circuitry will reset the chip.

Pin PD_SCK input is used to power down the HX711. When PD_SCK Input is low, chip is in normal working mode.

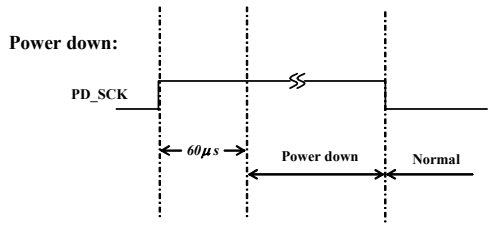

Fig.3 Power down control

When PD_SCK pin changes from low to high and stays at high for longer than 60μs, HX711 enters power down mode (Fig.3). When internal regulator is used for HX711 and the external transducer, both HX711 and the transducer will be powered down. When PD_SCK returns to low, chip will reset and enter normal operation mode.

After a reset or power-down event, input selection is default to Channel A with a gain of 128.

Application Example

Fig.1 is a typical weigh scale application using HX711. It uses on-chip oscillator (XI=0), 10Hz output data rate (RATE=0). A Single power supply （2.7～5.5V） comes directly from MCU power supply. Channel B can be used for battery level detection. The related circuitry is not shown on Fig. 1.

Reference PCB Board (Single Layer)

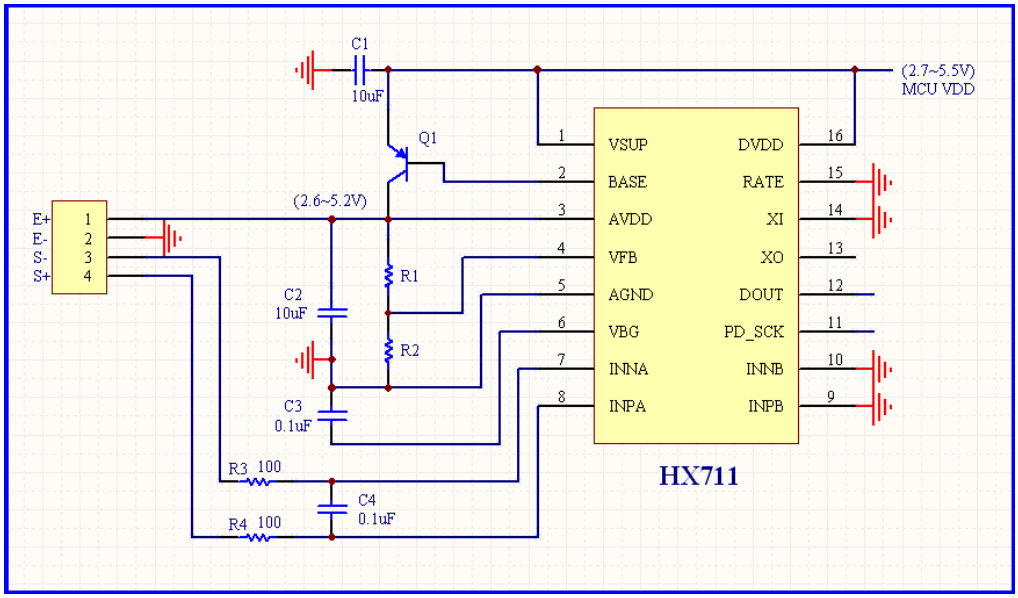

Fig.4 Reference PCB board schematic

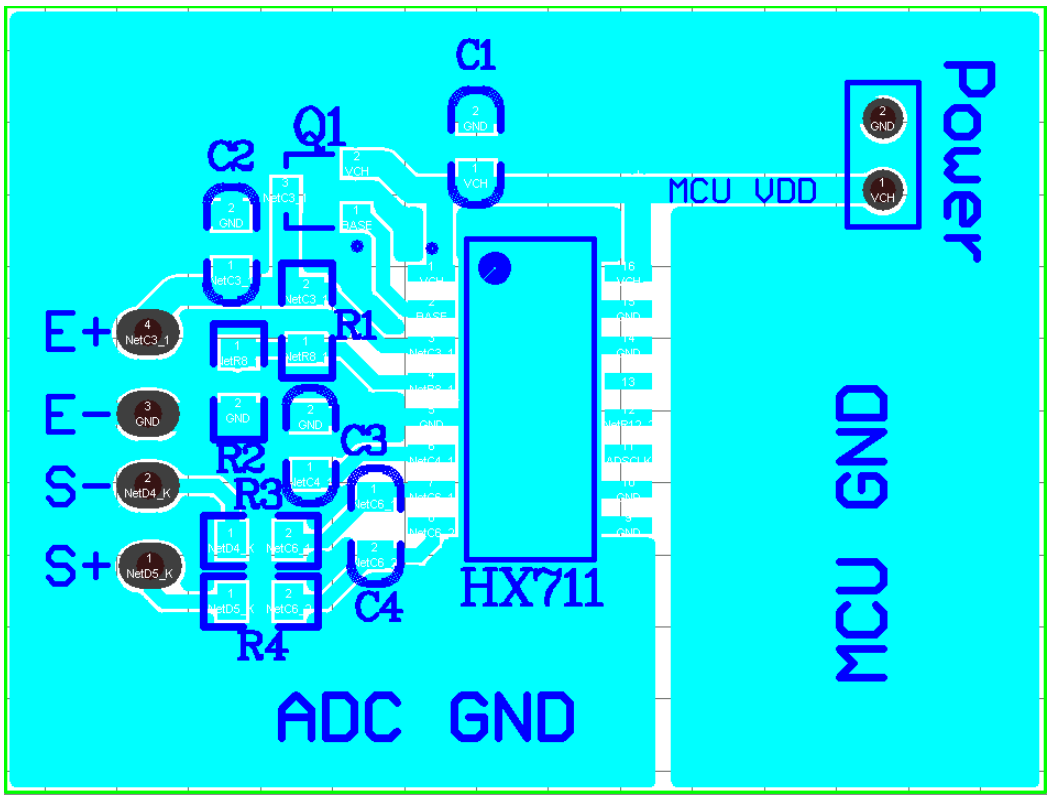

Fig.5 Reference PCB board layout

Reference Driver (Assembly)

```
/*-----------------------------------------------------------------
Call from ASM:      LCALL   ReaAD
Call from C:    extern unsigned long ReadAD(void);
                  .
                  .
                 unsigned long data;
                 data=ReadAD();
                  .
                  .
-------------------------------------------------------------------*/
PUBLIC        ReadAD
HX711ROM      segment  code
rseg          HX711ROM

sbit           ADDO = P1.5;
sbit           ADSK = P0.0;
/*-----------------------------------------------
 OUT:   R4, R5, R6, R7   R7=>LSB
-----------------------------------------------*/
ReadAD:
    CLR    ADSK              //AD Enable (PD_SCK set low)
    SETB   ADDO              //Enable 51CPU I/O
    JB     ADDO,$            //AD conversion completed?
    MOV    R4,#24
ShiftOut:
    SETB   ADSK              //PD_SCK set high (positive pulse)
    NOP
    CLR    ADSK              //PD_SCK set low
    MOV    C,ADDO            //read on bit
    XCH    A,R7              //move data
    RLC    A
    XCH    A,R7
    XCH    A,R6
    RLC    A
    XCH    A,R6
    XCH    A,R5
    RLC    A
    XCH    A,R5
    DJNZ   R4,ShiftOut        //moved 24BIT?
    SETB   ADSK
    NOP
    CLR    ADSK
    RET
    END
```

Reference Driver（C）

```
//-----------------------------------------------------------------
sbit   ADDO = P1^5;
sbit   ADSK = P0^0;
unsigned long ReadCount(void){
  unsigned long Count;
  unsigned char i;
  ADDO=1;
  ADSK=0;
  Count=0;
  while(ADDO);
  for (i=0;i<24;i++){
    ADSK=1;
    Count=Count<<1;
    ADSK=0;
    if(ADDO) Count++;
  }
  ADSK=1;
  Count=Count^0x800000;
  ADSK=0;
  return(Count);
}
```

Package Dimensions

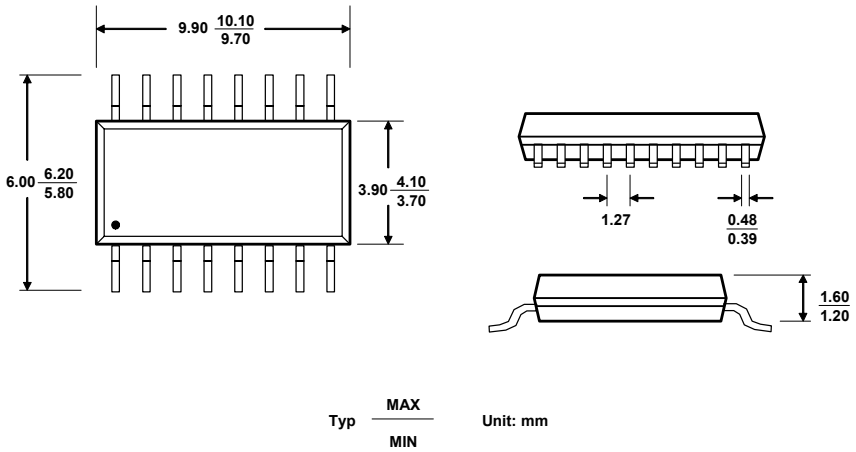

SOP-16L Package

WWW.HTC-SENSOR.COM

Features:

◆Capacity： 3~200kg
◆Material: aluminum-alloy or alloy steel
◆Type: Parallel beam type
◆Defend grade: IP65
◆Application : Palm scale, kitchen scale, electronic balance, fishing scale, electronic platform scale and other electronic weighing devices.

Electrical connection and Dimensions:(dimension unit: mm)

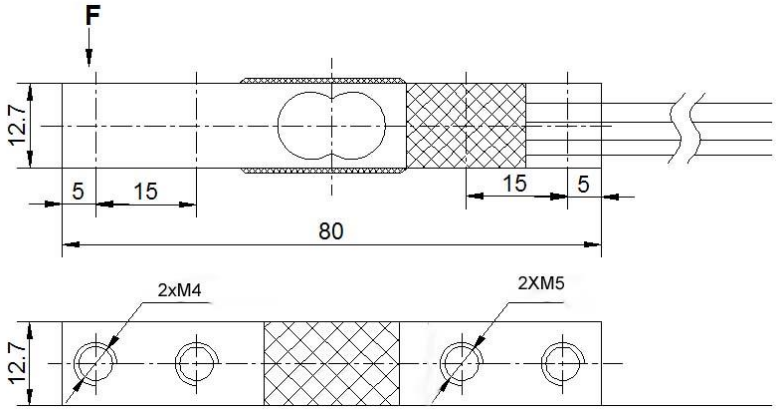

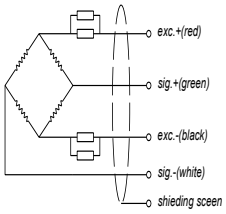

Specifications:		
capacity	kg	3,5,10,20,25,30,50(aluminum); 80,100,120,200(alloy steel)
safe overload	%FS	120
ultimate overload	%FS	150
rated output	mV/V	1.0 ± 0.15
excitation voltage	Vdc	5 ~ 10
combined error	%FS	± 0.05
zero unbalance	%FS	± 0.1
non-linearity	%FS	± 0.05
hysteresis	%FS	± 0.05
repeatability	%FS	± 0.03
creep	%FS/3min	± 0.05
input resistance	Ω	1000 ± 15
output resistance	Ω	1000 ± 10
insulation resistance	M Ω	≥ 2000
operating temperature range	℃	-10 ~ +55
compensated temperature range	℃	-10 ~ +40
temperature coefficient of SPAN	%FS/10℃	± 0.05
temperature coefficient of ZERO	%FS/10℃	± 0.05
Electrical connection	cable	4 color wire (standard)or 4 shielded PVC cable, Ø0.8 × 220 mm

※**Ordering code:** model-capacity- rated output-accuracy-defend grade- the length of cable

°

ANNOUNCED SPECIFICATION OF HS-422 STANDARD DELUXE SERVO

1.TECHNICAL VALUES

CONTROL SYSTEM	: +PULSE WIDTH CONTROL 1500usec NEUTRAL	
OPERATING VOLTAGE RANGE	: 4.8V TO 6.0V	
OPERATING TEMPERATURE RANGE	: -20 T0 +60°C	
TEST VOLTAGE	: AT 4.8V	AT 6.0V
OPERATING SPEED	: 0.21sec/60° AT NO LOAD	0.16sec/60° AT NO LOAD
STALL TORQUE	: 3.3kg.cm(45.82oz.in)	4.1kg.cm(56.93oz.in)
OPERATING ANGLE	: 45°/ONE SIDE PULSE TRAVELING 400usec	
DIRECTION	: CLOCK WISE/PULSE TRAVELING 1500 TO 1900usec	
CURRENT DRAIN	: 8mA/IDLE AND 150mA/NO LOAD RUNNING	
DEAD BAND WIDTH	: 8usec	
CONNECTOR WIRE LENGTH	: 300mm(11.81in)	
DIMENSIONS	: 40.6x19.8x36.6mm(1.59x0.77x1.44in)	
WEIGHT	: 45.5g(1.6oz)	

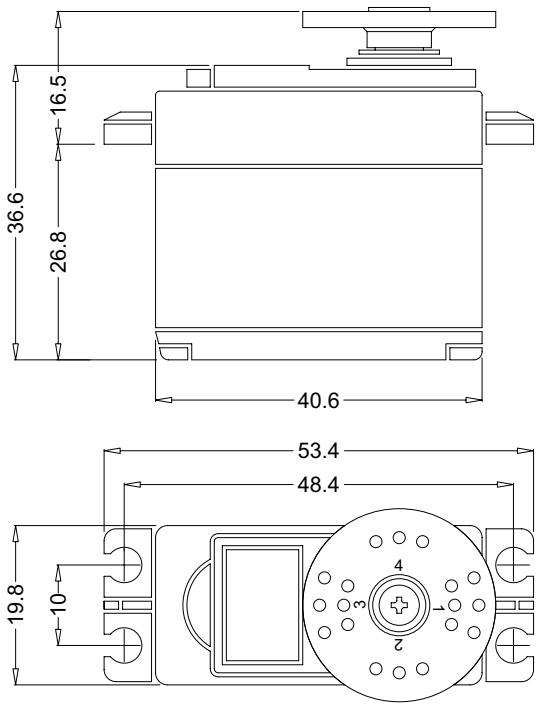

2.FEATURES

3-POLE FERRITE MOTOR
LONG LIFE POTENTIOMETER
DUAL OILITE BUSHING
INDIRECT POTENTIOMETER DRIVE

3.APPLICATIONS

AIRCRAFT 20-60 SIZE
30 SIZE HELICOPTERS
STEERING AND THROTTLE SERVO FOR CARS
TRUCK AND BOATS

TP4056 1A Standalone Linear Li-Ion Battery Charger with Thermal Regulation in SOP-8

DESCRIPTION

The TP4056 is a complete constant-current/constant-voltage linear charger for single cell lithium-ion batteries. Its SOP package and low external component count make the TP4056 ideally suited for portable applications. Furthermore, the TP4056 can work within USB and wall adapter.

No blocking diode is required due to the internal PMOSFET architecture and have prevent to negative Charge Current Circuit. Thermal feedback regulates the charge current to limit the die temperature during high power operation or high ambient temperature. The charge voltage is fixed at 4.2V, and the charge current can be programmed externally with a single resistor. The TP4056 automatically terminates the charge cycle when the charge current drops to 1/10th the programmed value after the final float voltage is reached.

TP4056 Other features include current monitor, under voltage lockout, automatic recharge and two status pin to indicate charge termination and the presence of an input voltage.

FEATURES

- Programmable Charge Current Up to 1000mA
- No MOSFET, Sense Resistor or Blocking Diode Required
- Complete Linear Charger in SOP-8 Package for Single Cell Lithium-Ion Batteries
- Constant-Current/Constant-Voltage
- Charges Single Cell Li-Ion Batteries Directly from USB Port
- Preset 4.2V Charge Voltage with 1.5% Accuracy
- Automatic Recharge
- two Charge Status Output Pins
- C/10 Charge Termination
- 2.9V Trickle Charge Threshold (TP4056)
- Soft-Start Limits Inrush Current
- Available Radiator in 8-Lead SOP Package, the Radiator need connect GND or impending

ABSOLUTE MAXIMUM RATINGS

- Input Supply Voltage(V_{CC}): -0.3V～8V
- TEMP: -0.3V～10V
- CE: -0.3V～10V
- BAT Short-Circuit Duration: Continuous
- BAT Pin Current: 1200mA
- PROG Pin Current: 1200uA
- Maximum Junction Temperature: 145℃
- Operating Ambient Temperature Range: -40℃～85℃
- Lead Temp.(Soldering, 10sec): 260℃

APPLICATIONS

- Cellular Telephones, PDAs, GPS
- Charging Docks and Cradles
- Digital Still Cameras, Portable Devices
- USB Bus-Powered Chargers,Chargers

PACKAGE/ORDER INFORMATION

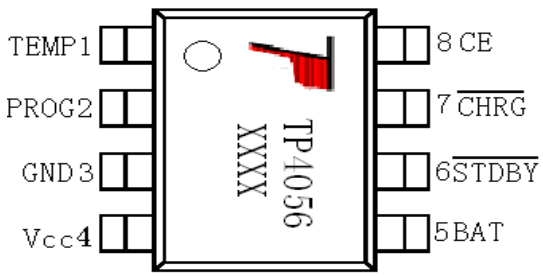

SOP－8

photo	ORDER PART NUMBER
	TP4056-42-SOP8-PP
	PART MARKING TP4056

Complete Charge Cycle (1000mAh Battery)

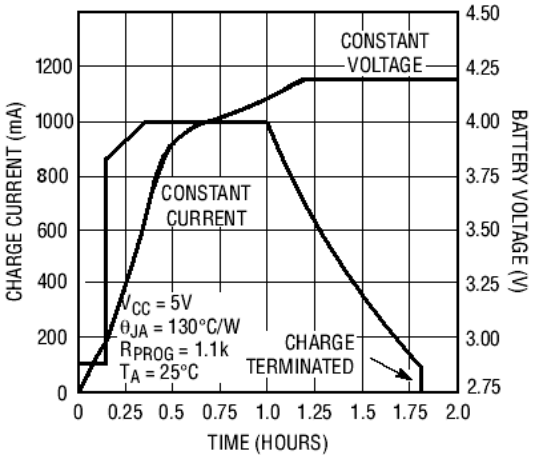

TEMP(Pin 1) :Temperature Sense Input Connecting TEMP pin to NTC thermistor's output in Lithium ion battery pack. If TEMP pin's voltage is below 45% or above 80% of supply voltage V_{IN} for more than 0.15S, this means that battery's temperature is too high or too low, charging is suspended. The temperature sense function can be disabled by grounding the TEMP pin.

PROG(Pin 2): Constant Charge Current Setting and Charge Current Monitor Pin charge current is set by connecting a resistor R_{ISET} from this pin to GND. When in precharge mode, the ISET pin's voltage is regulated to 0.2V. When in constant charge current mode, the ISET pin's voltage is regulated to 2V.In all modes during charging, the voltage on ISET pin can be used to measure the charge current as follows:

$$I_{BAT} \bullet \frac{V_{PROG}}{R_{PROG}} \bullet 1200 \quad (V_{PROG}=1V)$$

GND(Pin3): Ground Terminal

Vcc(Pin 4): Positive Input Supply Voltage V_{IN} is the power supply to the internal circuit. When V_{IN} drops to within 30mv of the BAT pin voltage, TP4056 enters low power sleep mode, dropping BAT pin's current to less than 2uA.

BAT(Pin5): Battery Connection Pin. Connect the positive terminal of the battery to BAT pin. BAT pin draws less than 2uA current in chip disable mode or in sleep mode. BAT pin provides charge current to the battery and provides regulation voltage of 4.2V.

$\overline{STDBY}$(Pin6): Open Drain Charge Status Output When the battery Charge Termination, the $\overline{STDBY}$ pin is pulled low by an internal switch, otherwise $\overline{STDBY}$ pin is in high impedance state.

$\overline{CHRG}$ (Pin7): Open Drain Charge Status Output When the battery is being charged, the $\overline{CHRG}$ pin is pulled low by an internal switch, otherwise $\overline{CHRG}$ pin is in high impedance state.

CE(Pin8): Chip Enable Input. A high input will put the device in the normal operating mode. Pulling the CE pin to low level will put the YP4056 into disable mode. The CE pin can be driven by TTL or CMOS logic level.

ELECTRICAL CHARACTERISTICS

The ● denotes specifications which apply over the full operating temperature range, otherwise specifications are at **T_A=25℃，V_{CC} =5V**，unless otherwise noted.

SYMBOL	PARAMETER	CONDITIONS		MIN	TYP	MAX	UNITS
V_{CC}	Input Supply Voltage		●	4.0	5	8.0	V
I_{CC}	Input Supply Current	Charge Mode, R_{PROG} = 1.2k StandbyMode(Charge Terminated) Shutdown Mode (R_{PROG} Not Connected,V_{CC} < V_{BAT}, or V_{CC} < V_{UV})	● ● ●		150 55 55	500 100 100	μA μA μA
V_{FLOAL}	Regulated Output (Float) Voltage	0℃≤T_A≤85℃，I_{BAT}=40mA		4.137	4.2	4.263	V
I_{BAT}	BAT Pin Current Text condition:VBAT=4.0V	R_{PROG} = 2.4k, Current Mode R_{PROG} = 1.2k, Current Mode Standby Mode, V_{BAT} = 4.2V	● ● ●	450 950 0	500 1000 －2.5	550 1050 －6	mA mA μA
I_{TRIKL}	Trickle Charge Current	V_{BAT}<V_{TRIKL}, R_{PROG}=1.2K	●	120	130	140	mA
V_{TRIKL}	Trickle Charge Threshold Voltage	R_{PROG}=1.2K, V_{BAT} Rising		2.8	2.9	3.0	V
V_{TRHYS}	Trickle Charge Hysteresis Voltage	R_{PROG}=1.2K		60	80	100	mV
T_{LIM}	Junction Temperature in Constant Temperature Mode				145		℃

indicator light state

Charge state	Red LED $\overline{CHRG}$	Greed LED $\overline{STDBY}$
charging	bright	extinguish
Charge Termination	extinguish	bright
Vin too low; Temperature of battery too low or too high; no battery	extinguish	extinguish
BAT PIN Connect 10u Capacitance; No battery	Greed LED bright，Red LED Coruscate T=1-4 S	

Rprog Current Setting

R_{PROG} (k)	I_{BAT} (mA)
10	130
5	250
4	300
3	400
2	580
1.66	690
1.5	780
1.33	900
1.2	1000

TYPICAL APPLICATIONS

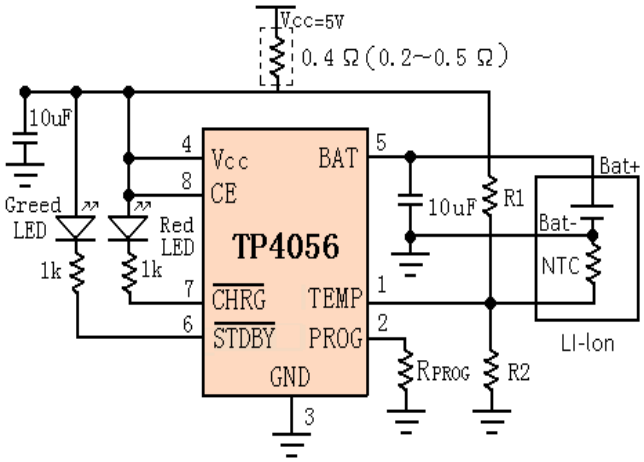

SPECIFICATION OF PRODUCT

□□□□□□□□□□□□ □□□□□□□□□□□□□□□□□□□□□□□□□□□□

□□□□□□□□□□ □□□□□□□□□□□□□□□□□□

Tentative

July, 9th, 2015

Samsung SDI Co., Ltd.

Cell Business Division

Spec. No.	INR18650-35E	Version No.	Ver. 1.1

Revision No.	Date('yr-m-d)	Page	Item	Description	Changes / Author
Ver. 1.0	'15-03-10	19		Ver. 1.0	Yunwoong Kim
Ver. 1.1	'15-07-09	19		Cycle life condition change	Yunwoong Kim

Tentative

1. Scope

This product specification has been prepared to specify the rechargeable lithium-ion cell ('cell') to be supplied to the customer by Samsung SDI Co., Ltd.

2. Description and Model

2.1 Description Cell (lithium-ion rechargeable cell)

2.2 Model INR18650-35E

2.3 Site Manufactured in Korea

3. Nominal Specifications

Item	Specification
3.1 Standard discharge Capacity	Min 3,350mAh - Charge : 0.5C(1,700mA), 4.2V, 0.02C(68mA) cut-off @RT - Discharge : 0.2C(680mA), 2.65V cut-off @RT *1C=3,400mA
3.2 Charging Voltage	4.2V
3.3 Nominal Voltage	3.60V
3.4 Charging Method	CC-CV (constant voltage with limited current)
3.5 Charging Current	Standard charge: 1,700mA For cycle life : 1,020mA
3.6 Charging Time	Standard charge: 4hours
3.7 Max. Charge Current	2,000mA (not for cycle life)
3.8 Max. Discharge Current	8,000mA (for continuous discharge) 13,000mA (not for continuous discharge)
3.9 Discharge Cut-off Voltage	2.65V
3.10 Cell Weight	50 g max
3.11 Cell Dimension	Height : Max. 65.25 mm Diameter: Max. Φ 18.55 mm
3.12 Operating Temperature (Cell Surface Temperature)□	Charge : 0 to 45°C Discharge : -10 to 60°C
3.13 Storage Temperature	1 year : -20~25°C (1*) 3 months : -20~45°C (1*) 1 month : -20~60°C (1*)

Note (1): If the cell is kept as ex-factory status (30% of charge), the capacity recovery rate is more than 80%.

Tentative

4. Outline Dimensions

See the Fig. 1

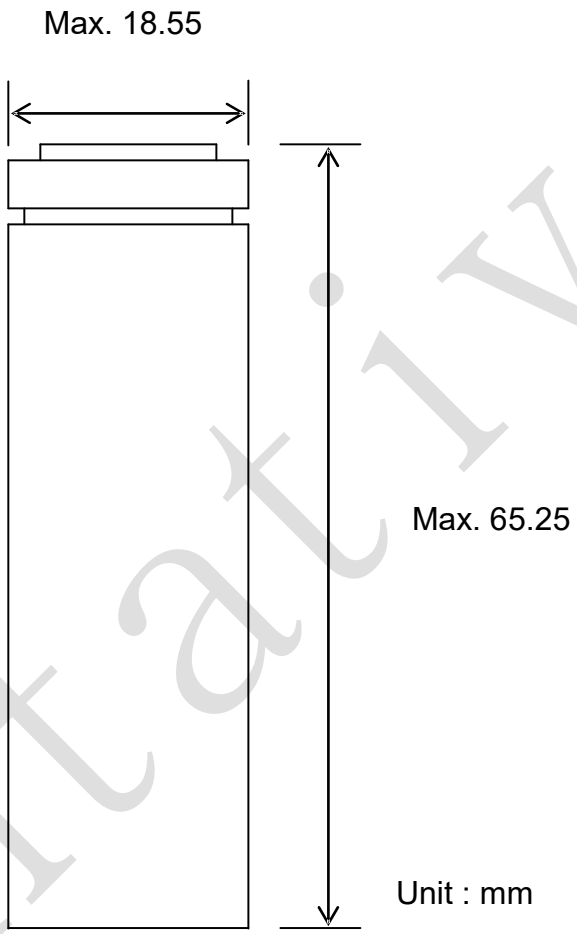

Tentative

5. Appearance

There shall be no such defects as scratch, rust, discoloration, leakage which may adversely affect commercial value of the cell.

6. Standard Test Conditions

6.1 Environmental Conditions

Unless otherwise specified, all tests stated in this specification are conducted at temperature 23□3°C and humidity 65%.

6.2 Measuring Equipment

(1) Amp-meter and Volt-meter

The amp-meter and volt-meter should have an accuracy of the grade 0.5mA and mV or higher.

(2) Slide caliper

The slide caliper should have 0.01 mm scale.

(3) Impedance meter

The impedance meter with AC 1kHz should be used.

7. Characteristics

7.1 Standard Charge

This "Standard Charge" means charging the cell with charge current of 1,700mA and constant voltage 4.2V at 23°C, 0.02C(68mA) cut-off.

7.2 Standard Discharge Capacity

The standard discharge capacity is the initial discharge capacity of the cell, which is measured with discharge current of 0.2C(680mA) with 2.65V cut-off at 23°C within 1 hour after the Standard charge.

Standard Discharge Capacity □ 3,350mAh

7.3 Rated Discharge Capacity

The rated discharge capacity is the initial discharge capacity of the cell, which is measured with discharge current of 1C(3,400mA) with 2.65V cut-off at 23°C within 1 hour after the Standard charge.

Rated Discharge Capacity □ 3,250mAh (97% of 3,350mAh)

7.4 Initial internal impedance

Initial internal impedance measured at AC 1kHz after Standard charge.

Initial internal impedance □ 35m□

Tentative

7.5 Temperature Dependence of Discharge Capacity

Discharge capacity comparison at each temperature, measured with discharge constant current 3,400mA and 2.65V cut-off with follow temperature after the Standard charging at 23°C.

Charge Temperature	Discharge temperature		
23°C	-10°C	23°C	40°C
Relative Capacity	40%	97%	97%

Note: If charge temperature and discharge temperature is not the same, the interval for temperature change is 3 hours.
Percentage as an index of the Standard discharge capacity (=3,350mAh) is 100%.

7.6 Temperature Dependence of Charge Capacity

Capacity comparison at each temperature, measured with discharge constant current 680mA and 2.65V cut-off at 23°C after the Standard charge is as follow temperature.

	Charge temperature			Discharge temperature
	0°C	23°C	45°C	23°C
Relative Capacity	60%	100%	100%	

Note: If charge temperature and discharge temperature is not the same, the interval for temperature change is 3 hours.
Percentage as an index of the Standard discharge capacity (=3,350mAh) is 100%.

7.7 Charge Rate Capabilities

Discharge capacity is measured with constant current 680mA and 2.65V cut-off after the cell is charged with 4.2V at 23°C as follows.

	Charge Condition	
Current	0.5C (1,700mA)	1.0C (3,400mA)
Cut-off	3h or 0.02C	2.5h or 0.02C
Relative Capacity	100%	97%

Note: Percentage as an index of the Standard discharge capacity (=3,350mAh) is 100%.

Tentative

7.8 Discharge Rate Capabilities

Discharge capacity is measured with the various currents in under table and 2.65V cut-off after the Standard charge at 23°C.

	Discharge Condition			
Current	0.2C (680mA)	1C (3,400mA)	2C (6,800mA)	8000mA
Relative Capacity	100%	97%	95%	92%

Note: Percentage as an index of the Standard discharge capacity (=3,350mAh) is 100%.

7.9 Cycle Life

Each cycle is an interval between the charge (charge current 1,020mA) with 100mA cut-off and the discharge (discharge current 3,400mA) with 2.65V cut-off. Capacity after 500cycles.

Capacity □ 2,010mAh (60% of Standard Capacity)

7.10 Storage Characteristics

Capacity after storage for 20days at 60°C after the Standard charged at 23°C, measured with discharge current 680mA with 2.65V cut-off at 23□ .

Capacity recovery(after the storage) □ 3,183mAh (95% of Standard Discharge Capacity)

7.11 Status of the cell as of ex-factory

The cell should be shipped in 3.49V ~ 3.69V Charging voltage range.

8. Mechanical Characteristics

8.1 Drop Test

Test method: Each fully charged cell or battery is dropped three times from a height of 1.0 m onto a concrete floor. The cells or batteries are dropped so as to obtain impacts in random orientations. After the test, the sample shall be put on rest for a minimum of one hour and then a visual inspection shall be performed.

Criteria: No fire, no explosion

(Test shall be performed with the following criteria IEC 62133)

8.2 Vibration Test

Test method: As to the UN transportation regulation(UN38.3), for each axis (X and Y axis with cylindrical cells) 7Hz□ 200Hz□ 7Hz for 15min, repetition 12 times totally 3hours, the acceleration 1g during 7 to 18Hz and 8g (amplitude 1.6mm) up to 200Hz.

Criteria: No leakage, with less than 10mV of OCV drop

Tentative

9. Safety

9.1 Overcharge Test

Test method: To charge the standard charged cell with 12V and 3C(10.2A) at 23°C for 7 hours.

Criteria: No fire, and no explosion.

Overcharge test shall be performed with the UL1642 standard

9.2 External Short-circuit Test

Test method: To short-circuit the standard charged cell by connecting positive and negative terminal by less than 80~20mΩ wire for 3 hours.

Criteria: No fire, and no explosion.

9.3 Reverse Charge Test

Test method: To charge reversely the standard discharged cell with charge current 3,400mA for 1.5 hours.

Criteria: No fire, and no explosion.

9.4 Heating Test

Test method: To heat the standard charged cell at heating rate of 5°C per minute up to 130°C and keep the cell in oven for 10 minutes.

Criteria: No fire, and no explosion.

10. Warranty

Samsung SDI will be responsible for replacing the cell against defects or poor workmanship for 15month from the date of shipping. Any other problems caused by malfunction of the equipment or unsuitable use of the cell are not under this warranty.
The warranty set forth in proper use, handling conditions described above,
and excludes in the case of a defect which is not related to manufacturing of the cell.

11. Others

□

11.1 Storage for a long time

If the cell is kept for a long time (3months or more), It is strongly recommended that the cell is preserved at dry and low-temperature.

11.2 Other

Any matters that specifications does not have, should be conferred with between the both parties.

Tentative

12. Packaging

See Fig.2, Package Drawing

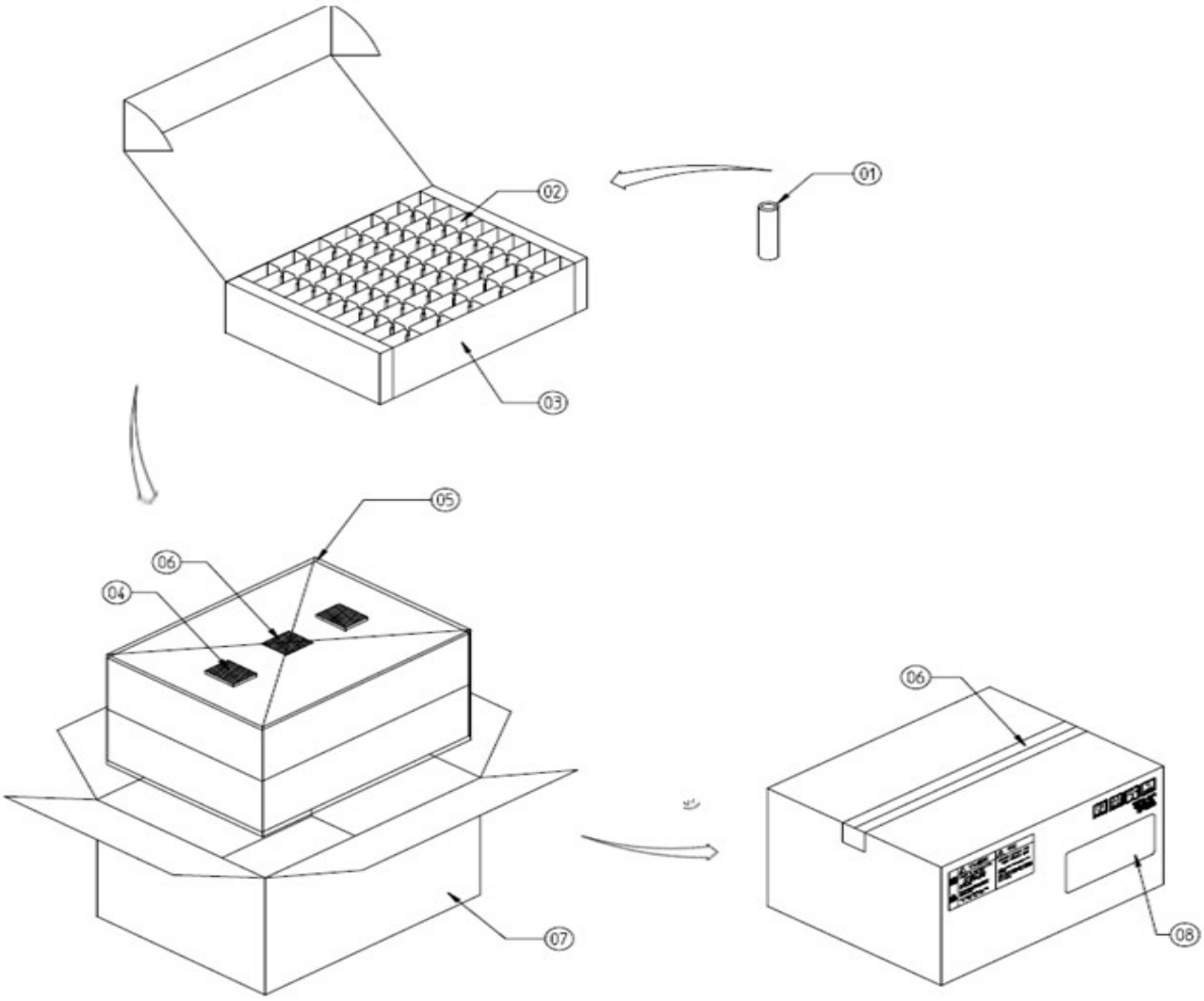

NO	PART NAME	MATERIAL	MATERIAL DIM	Q'TY	TREATMENT
01	INR18650(Ref. Model List)	BARE CELL	ø18, H65	200	NONE
02	PACKING GUIDE	MANILA	L192×W191×H67	200	NONE
03	PACKING CASE IN	SW-1(B FLUTE)	L192×W192×H68	2	NONE
04	SILICAGEL	SI	L50×W50,3G	2	NONE
05	PE BAG(LARGE)	PE	L500×W450×T0.028	1	NONE
06	TAPE	PE(OPP)	W50×T0.05	1	NONE
07	PACKING CASE OUT	DW-1(BA FLUTE)	L225×W214×H164	1	NONE
08	LABEL	ART PAPER	L52×W100	1	NONE

Proper Use and Handling of Lithium Ion Cells

See before using lithium-ion cell
Supplied by
Samsung SDI Co., Ltd.

1. General

This document has been prepared to describe the appropriate cautions and prohibitions, which the customer should take or employ when the customer uses and handles the lithium ion cell to be manufactured and supplied by Samsung SDI Co., Ltd., in order to obtain optimum performance and safety.

2. Charging

2.1. Charging current
Charging current should be less than maximum charge current specified in the product specification.

2.2. Charging voltage
Charging should be done by voltage less than that specified in the product specification.

2.3. Charging time
Continuous charging under appropriate voltage does not cause any loss of characteristics. However, the charge timer is recommended to be installed from a safety consideration, which shuts off further charging at time specified in the product specification.

2.4. Charging temperature
The cell should be charged within a range of specified temperatures in the product specification.

2.5. Reverse charging
The cell should be connected, confirming that its poles are correctly aligned. Inverse charging should be strictly prohibited. If the cell is connected improperly, it may be damaged.

3. Discharging

3.1. Discharging
3.1.1. The cell should be discharged at less than maximum discharge current specified in the product specification.

3.2. Discharging temperature
3.2.1. The cell should be discharged within a range of temperatures specified in the product specification.
3.2.2. Otherwise, it may cause loss of characteristics.

Tentative

3.3. Over-discharging

3.3.1. The system should be equipped with a device to prevent further discharging exceeding discharging cut-off voltage specified in the product specification.(over-discharging)

3.3.2. Over-discharging may cause loss of performance, characteristics, of battery function.

3.3.3. Over-discharging may occur by self-discharge if the battery is left for a very long time without any use.

3.3.4. The charger should be equipped with a device to detect cell voltage and to determine recharging procedures.

4. Storage

□

4.1. Storage conditions

4.1.1. The cell should be stored within a range of temperatures specified in the product specification.

4.1.2. Otherwise, it may cause loss of characteristics, leakage and/or rust.

4.2. Long-term storage

4.2.1. The cell should be used within a short period after charging because long-term storage may cause loss of capacity by self-discharging.

4.2.2. If long-term storage is necessary, the cell should be stored at lower voltage within a range specified in the product specification, because storage at higher voltage may cause loss of characteristics.

5. Cycle life

□

5.1. Cycle life performance

5.1.1. The cell can be charged/discharged repeatedly up to times specified in the produce specification with a certain level of capacity also specified in the product specification.

5.1.2. Cycle life may be determined by conditions of charging, discharging, operating temperature and/or storage.

6. Design of System

6.1. Connection between the cell and the battery

6.1.1. The cell should not be soldered directly with leads. Namely, the cell should be welded with leads on its terminal and then be soldered with wire or leads to soldered lead.

6.1.2. Otherwise, it may cause damage of component, such as separator and insulator, by heat generation.

Tentative

6.2 Positioning the battery in the System

6.2.1. The battery should be positioned as possible as far from heat sources and high temperature components.

6.2.2. Otherwise, it may cause loss of characteristics.

6.3. Mechanical shock protection of the battery

6.3.1. The battery should be equipped with appropriate shock absorbers in order to minimize shock.

6.3.2. Otherwise, it may cause shape distortion, leakage, heat generation and/or rupture.

6.4. Short-circuit protection of the cell

6.4.1. The cell is equipped with an insulating sleeve to protect short-circuit which may occur during transportation, battery assembly and /or system operation.

6.4.2. If the cell sleeve is damaged by some causes such as outside impact, it may cause short-circuit with some wiring inside the battery.

6.5. Connection between the battery and charger/system

6.5.1. The battery should be designed to be connected only to the specified charger and system.

6.5.2. A reverse connection of the battery, even in the specified system, should be avoided by employing special battery design such as a special terminals.

7. Battery Pack Assembly

7.1. Prohibition of usage of damaged cell

7.1.1. The cell should be inspected visually before battery assembly.

7.1.2. The cell should not be used if sleeve-damage, can-distortion and/or electrolyte-smell is detected.

7.2. Transportation

7.2.1. If the cell is necessary to transport to order place, such as the battery manufacturer, careful precautions should be taken to avoid damage of cell.

8. Others

8.1. Disassembly

8.1.1. The cell should not be dismantled from the battery pack.

8.1.2. Internal short-circuit caused by disassembly may lead to heat generation and/or venting.

8.1.3. When the electrolyte is coming in contact with the skin or eyes, wash immediately with fresh water and seek medical advice.

Tentative

8.2. Short-circuiting

8.2.1. Short-circuit results in very high current which leads to heat generation.

8.2.2. An appropriate circuitry should be employed to protect accidental short-circuiting.

8.3. Incineration

8.3.1 Incinerating and disposing of the cell in fire are strictly prohibited, because it may cause rupture.

8.4. Immersion

8.4.1 Soaking the cell in water is strictly prohibited, because it may cause melt of components to damaged to functions.

8.5. Mixing use

8.5.1. Different types of cell, or same types but different manufacturer's cell may lead to cell rupture or damage to system due to the different characteristics of cell.

8.6. Battery disposal

8.6.1. Although the cell contains no environmentally hazardous component, such as lead or cadmium. the battery should be disposed according to the local regulations when it is disposed.

8.6.2. The cell should be disposed with a discharged state to avoid heat generation by an inadvertent short-circuit.

8.7. Caution - The Battery used in this device may present a risk of fire or chemical burn if mistreated. Do not disassemble, heat above 100°C or incinerate. Replace battery with Samsung SDI battery only. Use of another battery may present a risk of fire or explosion. Dispose of used battery promptly. Keep away from children. Do not disassemble and do not dispose of in fire.

8.8. Warning – Attached

Tentative

□ [illegible]

[illegible]	[illegible]	[illegible]	[illegible]	[illegible]	[illegible]	[illegible]	[illegible]
□ [illegible]	[illegible]	[illegible]	[illegible]	[illegible]	[illegible]	[illegible]	[illegible]
□ [illegible]	[illegible]	[illegible]	[illegible]	[illegible]	[illegible]	[illegible]	[illegible]
□ [illegible]	[illegible]	[illegible]	[illegible]	[illegible]	[illegible]	[illegible]	[illegible]
□ [illegible]	[illegible]	[illegible]	[illegible]	[illegible]	[illegible]	[illegible]	[illegible]
□ [illegible]	[illegible]	[illegible]	[illegible]	[illegible]	[illegible]	[illegible]	[illegible]
□ [illegible]	[illegible]	[illegible]	[illegible]	[illegible]	[illegible]	[illegible]	[illegible]
[illegible]	□ [illegible]	[illegible]	[illegible]	[illegible]	[illegible]	[illegible]	[illegible]
	□ [illegible]	[illegible]	[illegible]	[illegible]	[illegible]	[illegible]	[illegible]
[illegible]	□ [illegible]	[illegible]	[illegible]	[illegible]	[illegible]	[illegible]	[illegible]
	□ [illegible]	[illegible]	[illegible]	[illegible]	[illegible]	[illegible]	[illegible]
□ [illegible]	[illegible]	[illegible]	[illegible]	[illegible]	[illegible]	[illegible]	[illegible]
□ [illegible]	[illegible]	[illegible]	[illegible]	[illegible]	[illegible]	[illegible]	[illegible]
□ [illegible]	□[illegible]	□[illegible]	□[illegible]	□[illegible]	□[illegible]	□[illegible]	□[illegible]
□ [illegible]	[illegible]	[illegible]	[illegible]	[illegible]	[illegible]	[illegible]	[illegible]
□ [illegible]	[illegible]	[illegible]	[illegible]	[illegible]	[illegible]	[illegible]	[illegible]

□

[illegible]

* Current of cell which full-charging shall be terminated.

** Voltage condition of BMS which shall be shut down.

*** Under 1.0V voltage, do not charge the cell.

**** Voltage range of cell which shall be charged by Pre-charging.

□ [illegible]

[illegible]	[illegible]	[illegible]	[illegible]	[illegible]	[illegible]	[illegible]	[illegible]
□ [illegible]	□	□	□	□	□	□	□
□ [illegible]					□	□	□
□ [illegible]					□	□	□
□ [illegible]	□	□	□	□	□	□	□
□ [illegible]						□	□
□ [illegible]						□	□

□ [illegible]

□ [illegible]

Tentative

Inaccurate handling of lithium ion and lithium ion polymer rechargeable battery may cause leakage, heat, smoke, an explosion, or fire.

This could cause deterioration of performance or failure. Please be sure to follow instructions carefully.

1.1. Storage

Store the battery at low temperature (below 20°C is recommended), low humidity, no dust and no corrosive gas atmosphere.

1.2. Safety precaution and prohibitions

To assure product safety, describe the following precautions in the instruction manual of the application.

■ Electrical misusage

Use dedicated charger.

Use or charge the battery only in the dedicated application.

Don't charge the battery by an electric outlet directly or a cigarette lighter charger.

Don't charge the battery reversely.

■ Environmental misusage

Don't leave the battery near the fire or a heated source.

Don't throw the battery into the fire.

Don't leave, charge or use the battery in a car or similar place where inside of temperature may be over 60°C.

Don't immerse, throw, wet the battery in water / seawater.

■ others

Don't fold the battery cased with laminated film such as pouch and Polymer.

Don't store the battery in a pocket or a bag together with metallic objects such as keys, necklaces, hairpins, coins, or screws.

Don't short circuit (+) and (-) terminals with metallic object intentionally.

Don't pierce the battery with a sharp object such as a needle, screw drivers.

Don't heat partial area of the battery with heated objects such as soldering iron.

Don't hit with heavy objects such as a hammer, weight.

Tentative

Don't step on the battery and throw or drop the battery on the hard floor to avoid mechanical shock.

Don't disassemble the battery or modify the battery design including electric circuit.

Don't solder on the battery directly.

Don't use seriously scared or deformed battery.

Don't put the battery into a microwave oven, dryer ,or high-pressure container.

Don't use or assemble the battery with other makers' batteries, different types and/or models of batteries such as dry batteries, nickel-metal hydride batteries, or nickel-cadmium batteries.

Don't use or assemble old and new batteries together.

Stop charging the battery if charging isn't completed within the specified time.

Stop using the battery if the battery becomes abnormally hot, order, discoloration, deformation, or abnormal conditions is detected during use, charge, or storage.

Keep away from fire immediately when leakage or foul odors are detected. If liquid leaks onto your skin or cloths, wash well with fresh water immediately.

If liquid leaking from the battery gets into your eyes, don't rub your eyes and wash them with clean water and go to see a doctor immediately.

If the terminals of the battery become dirty, wipe with a dry cloth before using the battery.

The battery can be used within the following temperature ranges. Don't exceed these ranges.

Charge temperature ranges : 0°C ~ 45°C

Discharge Temperature ranges : -10°C ~ 60°C

Store the battery at temperature below 60°C

Cover terminals with proper insulating tape before disposal.

■ Electrical misusage

Battery must be charge with constant current-constant voltage (CC/CV).

Charge current must be controlled by specified value in Cell specification.

Cut-off Voltage of charging must be 4.20V

Charger must stop charging battery by detecting either charging time or current specified in Cell's specification.

Discharge current must be controlled by specified value in Cell's specification.

Cut-off Voltage of discharging must be over 2.65V.

Tentative

■ others

Keep the battery away from babies and children to avoid any accidents such as swallow.

If younger children use the battery, their guardians should explain the proper handling method and precaution before using.

Before using the battery, be sure to read the user's manual and precaution of it's handling.

Before using charger, be sure to read the user's manual of the charger.

Before installing and removing the battery from application, be sure to read user's manual of the application.

Replace the battery when using time of battery becomes much shorter than usual.

Cover terminals with insulating tape before proper disposal.

If the battery is needed to be stored for an long period, battery should be removed from the application and stored in a place where humidity and temperature are low.

While the battery is charged, used and stored, keep it away from object materials with static electric chargers.

■ Quarantine

Packages that are crushed, punctured or torn open to reveal contents should not be transported. Such packages should be isolated until the shipper has been consulted, provided instructions and, if appropriate, arranged to have the product inspected and repacked.

■ Spilled Product

In the event that damage to packaging results in the release of cells or batteries, the spilled products should be promptly collected and segregated and the shipper should be contacted for instructions.

To prevent the deterioration of the battery performance caused by heat, battery shall be positioned away from the area where heat is generated in the application and the charger.

Tentative

[illegible]

Be sure adopting proper safe device such as PTC specified type or model in Cell Specification. If you intend to adopt different safety device which is not specified in Cell Specification, please contact Samsung SDI to investigate any potential safety problem.

Be sure designing 2nd protective devices such as PTC & PCM at the same time to protect Cell just in case one protective device is fault.

Please contact following offices when you need any help including safety concerns.

[illegible]

- [illegible]
  428-5, Gongsae-dong, Kiheung-gu, Yongin, Kyunggi-do, Korea
  Tel: +82-31-8006-3100, Fax : +82-31-210-7887

- [illegible]
  508, Sungsung-Dong, Cheonan, Chungchongnam-Do, Korea
  Tel: +82-41-560-3114, Fax : +82-41-550-3399

- [illegible]
  3655 North First St. San Jose CA 95134
  Tel: +1-408-544-4541, Fax : +1-949-260-2221

- [illegible]
  9F-1,399 Ruey Kuang Road, Neihu, Taipei Taiwan
  Tel: +886-2-2656-8300, Fax : +886-2-2656-8329

- [illegible]
  Lot 635 & 660, Kawasan Perindustrian, Tuanku Jaafar, 71450
  Sungai Gadut, Negeri Sembilan Darul Khusus, Malaysia
  Tel: (+60)6-677-6160, 6153

Tentative

TP4056 1A Standalone Linear Li-Ion Battery Charger with Thermal Regulation in SOP-8

DESCRIPTION

The TP4056 is a complete constant-current/constant-voltage linear charger for single cell lithium-ion batteries. Its SOP package and low external component count make the TP4056 ideally suited for portable applications. Furthermore, the TP4056 can work within USB and wall adapter.

No blocking diode is required due to the internal PMOSFET architecture and have prevent to negative Charge Current Circuit. Thermal feedback regulates the charge current to limit the die temperature during high power operation or high ambient temperature. The charge voltage is fixed at 4.2V, and the charge current can be programmed externally with a single resistor. The TP4056 automatically terminates the charge cycle when the charge current drops to 1/10th the programmed value after the final float voltage is reached.

TP4056 Other features include current monitor, under voltage lockout, automatic recharge and two status pin to indicate charge termination and the presence of an input voltage.

FEATURES

- Programmable Charge Current Up to 1000mA
- No MOSFET, Sense Resistor or Blocking Diode Required
- Complete Linear Charger in SOP-8 Package for Single Cell Lithium-Ion Batteries
- Constant-Current/Constant-Voltage
- Charges Single Cell Li-Ion Batteries Directly from USB Port
- Preset 4.2V Charge Voltage with 1.5% Accuracy
- Automatic Recharge
- two Charge Status Output Pins
- C/10 Charge Termination
- 2.9V Trickle Charge Threshold (TP4056)
- Soft-Start Limits Inrush Current
- Available Radiator in 8-Lead SOP Package, the Radiator need connect GND or impending

ABSOLUTE MAXIMUM RATINGS

- Input Supply Voltage(V_{CC}): -0.3V～8V
- TEMP: -0.3V～10V
- CE: -0.3V～10V
- BAT Short-Circuit Duration: Continuous
- BAT Pin Current: 1200mA
- PROG Pin Current: 1200uA
- Maximum Junction Temperature: 145℃
- Operating Ambient Temperature Range: -40℃～85℃
- Lead Temp.(Soldering, 10sec): 260℃

APPLICATIONS

- Cellular Telephones, PDAs, GPS
- Charging Docks and Cradles
- Digital Still Cameras, Portable Devices
- USB Bus-Powered Chargers,Chargers

PACKAGE/ORDER INFORMATION

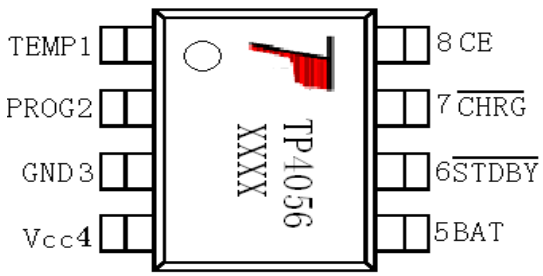

SOP－8

photo	ORDER PART NUMBER
	TP4056-42-SOP8-PP
	PART MARKING TP4056

Complete Charge Cycle (1000mAh Battery)

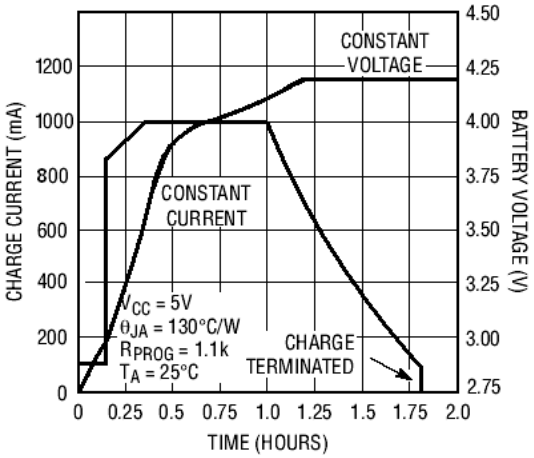

TEMP(Pin 1) :Temperature Sense Input Connecting TEMP pin to NTC thermistor's output in Lithium ion battery pack. If TEMP pin's voltage is below 45% or above 80% of supply voltage V_{IN} for more than 0.15S, this means that battery's temperature is too high or too low, charging is suspended. The temperature sense function can be disabled by grounding the TEMP pin.

PROG(Pin 2): Constant Charge Current Setting and Charge Current Monitor Pin charge current is set by connecting a resistor R_{ISET} from this pin to GND. When in precharge mode, the ISET pin's voltage is regulated to 0.2V. When in constant charge current mode, the ISET pin's voltage is regulated to 2V.In all modes during charging, the voltage on ISET pin can be used to measure the charge current as follows:

$$I_{BAT} \bullet \frac{V_{PROG}}{R_{PROG}} \bullet 1200 \quad (V_{PROG}=1V)$$

GND(Pin3): Ground Terminal

Vcc(Pin 4): Positive Input Supply Voltage V_{IN} is the power supply to the internal circuit. When V_{IN} drops to within 30mv of the BAT pin voltage, TP4056 enters low power sleep mode, dropping BAT pin's current to less than 2uA.

BAT(Pin5): Battery Connection Pin. Connect the positive terminal of the battery to BAT pin. BAT pin draws less than 2uA current in chip disable mode or in sleep mode. BAT pin provides charge current to the battery and provides regulation voltage of 4.2V.

$\overline{STDBY}$(Pin6): Open Drain Charge Status Output When the battery Charge Termination, the $\overline{STDBY}$ pin is pulled low by an internal switch, otherwise $\overline{STDBY}$ pin is in high impedance state.

$\overline{CHRG}$ (Pin7): Open Drain Charge Status Output When the battery is being charged, the $\overline{CHRG}$ pin is pulled low by an internal switch, otherwise $\overline{CHRG}$ pin is in high impedance state.

CE(Pin8): Chip Enable Input. A high input will put the device in the normal operating mode. Pulling the CE pin to low level will put the YP4056 into disable mode. The CE pin can be driven by TTL or CMOS logic level.

ELECTRICAL CHARACTERISTICS

The ● denotes specifications which apply over the full operating temperature range, otherwise specifications are at **T_A=25℃，V_{CC} =5V**，unless otherwise noted.

SYMBOL	PARAMETER	CONDITIONS		MIN	TYP	MAX	UNITS
V_{CC}	Input Supply Voltage		●	4.0	5	8.0	V
I_{CC}	Input Supply Current	Charge Mode, R_{PROG} = 1.2k StandbyMode(Charge Terminated) Shutdown Mode (R_{PROG} Not Connected,V_{CC} < V_{BAT}, or V_{CC} < V_{UV})	● ● ●		150 55 55	500 100 100	μA μA μA
V_{FLOAL}	Regulated Output (Float) Voltage	0℃≤T_A≤85℃，I_{BAT}=40mA		4.137	4.2	4.263	V
I_{BAT}	BAT Pin Current Text condition:VBAT=4.0V	R_{PROG} = 2.4k, Current Mode R_{PROG} = 1.2k, Current Mode Standby Mode, V_{BAT} = 4.2V	● ● ●	450 950 0	500 1000 －2.5	550 1050 －6	mA mA μA
I_{TRIKL}	Trickle Charge Current	V_{BAT}<V_{TRIKL}, R_{PROG}=1.2K	●	120	130	140	mA
V_{TRIKL}	Trickle Charge Threshold Voltage	R_{PROG}=1.2K, V_{BAT} Rising		2.8	2.9	3.0	V
V_{TRHYS}	Trickle Charge Hysteresis Voltage	R_{PROG}=1.2K		60	80	100	mV
T_{LIM}	Junction Temperature in Constant Temperature Mode				145		℃

indicator light state

Charge state	Red LED $\overline{CHRG}$	Greed LED $\overline{STDBY}$
charging	bright	extinguish
Charge Termination	extinguish	bright
Vin too low; Temperature of battery too low or too high; no battery	extinguish	extinguish
BAT PIN Connect 10u Capacitance; No battery	Greed LED bright，Red LED Coruscate T=1-4 S	

Rprog Current Setting

R_{PROG} (k)	I_{BAT} (mA)
10	130
5	250
4	300
3	400
2	580
1.66	690
1.5	780
1.33	900
1.2	1000

TYPICAL APPLICATIONS

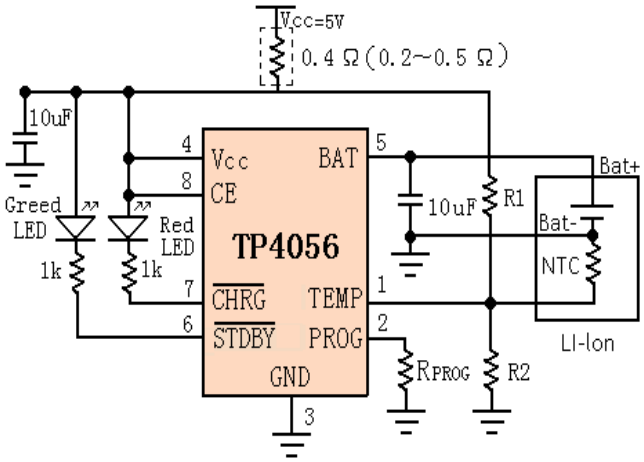

SPECIFICATION OF PRODUCT

□□□□□□□□□□□□ □□□□□□□□□□□□□□□□□□□□□□□□□□□□

□□□□□□□□□□ □□□□□□□□□□□□□□□□□□

Tentative

July, 9th, 2015

Samsung SDI Co., Ltd.

Cell Business Division

Spec. No.	INR18650-35E	Version No.	Ver. 1.1

Revision No.	Date('yr-m-d)	Page	Item	Description	Changes / Author
Ver. 1.0	'15-03-10	19		Ver. 1.0	Yunwoong Kim
Ver. 1.1	'15-07-09	19		Cycle life condition change	Yunwoong Kim

Tentative

1. Scope

This product specification has been prepared to specify the rechargeable lithium-ion cell ('cell') to be supplied to the customer by Samsung SDI Co., Ltd.

2. Description and Model

2.1 Description Cell (lithium-ion rechargeable cell)

2.2 Model INR18650-35E

2.3 Site Manufactured in Korea

3. Nominal Specifications

Item	Specification
3.1 Standard discharge Capacity	Min 3,350mAh - Charge : 0.5C(1,700mA), 4.2V, 0.02C(68mA) cut-off @RT - Discharge : 0.2C(680mA), 2.65V cut-off @RT *1C=3,400mA
3.2 Charging Voltage	4.2V
3.3 Nominal Voltage	3.60V
3.4 Charging Method	CC-CV (constant voltage with limited current)
3.5 Charging Current	Standard charge: 1,700mA For cycle life : 1,020mA
3.6 Charging Time	Standard charge: 4hours
3.7 Max. Charge Current	2,000mA (not for cycle life)
3.8 Max. Discharge Current	8,000mA (for continuous discharge) 13,000mA (not for continuous discharge)
3.9 Discharge Cut-off Voltage	2.65V
3.10 Cell Weight	50 g max
3.11 Cell Dimension	Height : Max. 65.25 mm Diameter: Max. Φ 18.55 mm
3.12 Operating Temperature (Cell Surface Temperature)□	Charge : 0 to 45°C Discharge : -10 to 60°C
3.13 Storage Temperature	1 year : -20~25°C (1*) 3 months : -20~45°C (1*) 1 month : -20~60°C (1*)

Note (1): If the cell is kept as ex-factory status (30% of charge), the capacity recovery rate is more than 80%.

Tentative

4. Outline Dimensions

See the Fig. 1

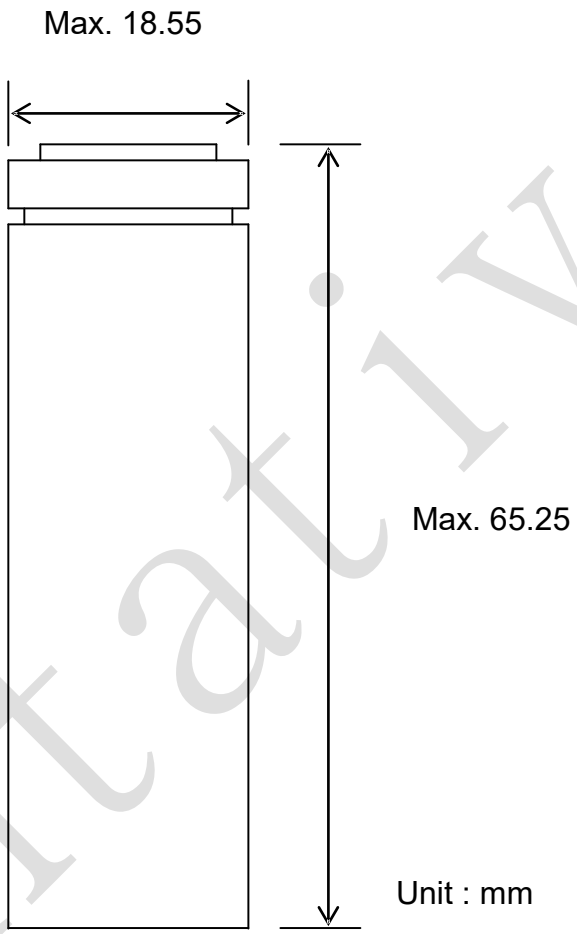

Tentative

5. Appearance

There shall be no such defects as scratch, rust, discoloration, leakage which may adversely affect commercial value of the cell.

6. Standard Test Conditions

6.1 Environmental Conditions

Unless otherwise specified, all tests stated in this specification are conducted at temperature 23□3°C and humidity 65%.

6.2 Measuring Equipment

(1) Amp-meter and Volt-meter

The amp-meter and volt-meter should have an accuracy of the grade 0.5mA and mV or higher.

(2) Slide caliper

The slide caliper should have 0.01 mm scale.

(3) Impedance meter

The impedance meter with AC 1kHz should be used.

7. Characteristics

7.1 Standard Charge

This "Standard Charge" means charging the cell with charge current of 1,700mA and constant voltage 4.2V at 23°C, 0.02C(68mA) cut-off.

7.2 Standard Discharge Capacity

The standard discharge capacity is the initial discharge capacity of the cell, which is measured with discharge current of 0.2C(680mA) with 2.65V cut-off at 23°C within 1 hour after the Standard charge.

Standard Discharge Capacity □ 3,350mAh

7.3 Rated Discharge Capacity

The rated discharge capacity is the initial discharge capacity of the cell, which is measured with discharge current of 1C(3,400mA) with 2.65V cut-off at 23°C within 1 hour after the Standard charge.

Rated Discharge Capacity □ 3,250mAh (97% of 3,350mAh)

7.4 Initial internal impedance

Initial internal impedance measured at AC 1kHz after Standard charge.

Initial internal impedance □ 35m□

Tentative

7.5 Temperature Dependence of Discharge Capacity

Discharge capacity comparison at each temperature, measured with discharge constant current 3,400mA and 2.65V cut-off with follow temperature after the Standard charging at 23°C.

Charge Temperature	Discharge temperature		
23°C	-10°C	23°C	40°C
Relative Capacity	40%	97%	97%

Note: If charge temperature and discharge temperature is not the same, the interval for temperature change is 3 hours.
Percentage as an index of the Standard discharge capacity (=3,350mAh) is 100%.

7.6 Temperature Dependence of Charge Capacity

Capacity comparison at each temperature, measured with discharge constant current 680mA and 2.65V cut-off at 23°C after the Standard charge is as follow temperature.

	Charge temperature			Discharge temperature
	0°C	23°C	45°C	23°C
Relative Capacity	60%	100%	100%	

Note: If charge temperature and discharge temperature is not the same, the interval for temperature change is 3 hours.
Percentage as an index of the Standard discharge capacity (=3,350mAh) is 100%.

7.7 Charge Rate Capabilities

Discharge capacity is measured with constant current 680mA and 2.65V cut-off after the cell is charged with 4.2V at 23°C as follows.

	Charge Condition	
Current	0.5C (1,700mA)	1.0C (3,400mA)
Cut-off	3h or 0.02C	2.5h or 0.02C
Relative Capacity	100%	97%

Note: Percentage as an index of the Standard discharge capacity (=3,350mAh) is 100%.

Tentative

7.8 Discharge Rate Capabilities

Discharge capacity is measured with the various currents in under table and 2.65V cut-off after the Standard charge at 23°C.

	Discharge Condition			
Current	0.2C (680mA)	1C (3,400mA)	2C (6,800mA)	8000mA
Relative Capacity	100%	97%	95%	92%

Note: Percentage as an index of the Standard discharge capacity (=3,350mAh) is 100%.

7.9 Cycle Life

Each cycle is an interval between the charge (charge current 1,020mA) with 100mA cut-off and the discharge (discharge current 3,400mA) with 2.65V cut-off. Capacity after 500cycles.

Capacity □ 2,010mAh (60% of Standard Capacity)

7.10 Storage Characteristics

Capacity after storage for 20days at 60°C after the Standard charged at 23°C, measured with discharge current 680mA with 2.65V cut-off at 23□ .

Capacity recovery(after the storage) □ 3,183mAh (95% of Standard Discharge Capacity)

7.11 Status of the cell as of ex-factory

The cell should be shipped in 3.49V ~ 3.69V Charging voltage range.

8. Mechanical Characteristics

8.1 Drop Test

Test method: Each fully charged cell or battery is dropped three times from a height of 1.0 m onto a concrete floor. The cells or batteries are dropped so as to obtain impacts in random orientations. After the test, the sample shall be put on rest for a minimum of one hour and then a visual inspection shall be performed.

Criteria: No fire, no explosion

(Test shall be performed with the following criteria IEC 62133)

8.2 Vibration Test

Test method: As to the UN transportation regulation(UN38.3), for each axis (X and Y axis with cylindrical cells) 7Hz□ 200Hz□ 7Hz for 15min, repetition 12 times totally 3hours, the acceleration 1g during 7 to 18Hz and 8g (amplitude 1.6mm) up to 200Hz.

Criteria: No leakage, with less than 10mV of OCV drop

Tentative

9. Safety

9.1 Overcharge Test

Test method: To charge the standard charged cell with 12V and 3C(10.2A) at 23°C for 7 hours.

Criteria: No fire, and no explosion.

Overcharge test shall be performed with the UL1642 standard

9.2 External Short-circuit Test

Test method: To short-circuit the standard charged cell by connecting positive and negative terminal by less than 80~20mΩ wire for 3 hours.

Criteria: No fire, and no explosion.

9.3 Reverse Charge Test

Test method: To charge reversely the standard discharged cell with charge current 3,400mA for 1.5 hours.

Criteria: No fire, and no explosion.

9.4 Heating Test

Test method: To heat the standard charged cell at heating rate of 5°C per minute up to 130°C and keep the cell in oven for 10 minutes.

Criteria: No fire, and no explosion.

10. Warranty

Samsung SDI will be responsible for replacing the cell against defects or poor workmanship for 15month from the date of shipping. Any other problems caused by malfunction of the equipment or unsuitable use of the cell are not under this warranty.
The warranty set forth in proper use, handling conditions described above,
and excludes in the case of a defect which is not related to manufacturing of the cell.

11. Others

□

11.1 Storage for a long time

If the cell is kept for a long time (3months or more), It is strongly recommended that the cell is preserved at dry and low-temperature.

11.2 Other

Any matters that specifications does not have, should be conferred with between the both parties.

Tentative

12. Packaging

See Fig.2, Package Drawing

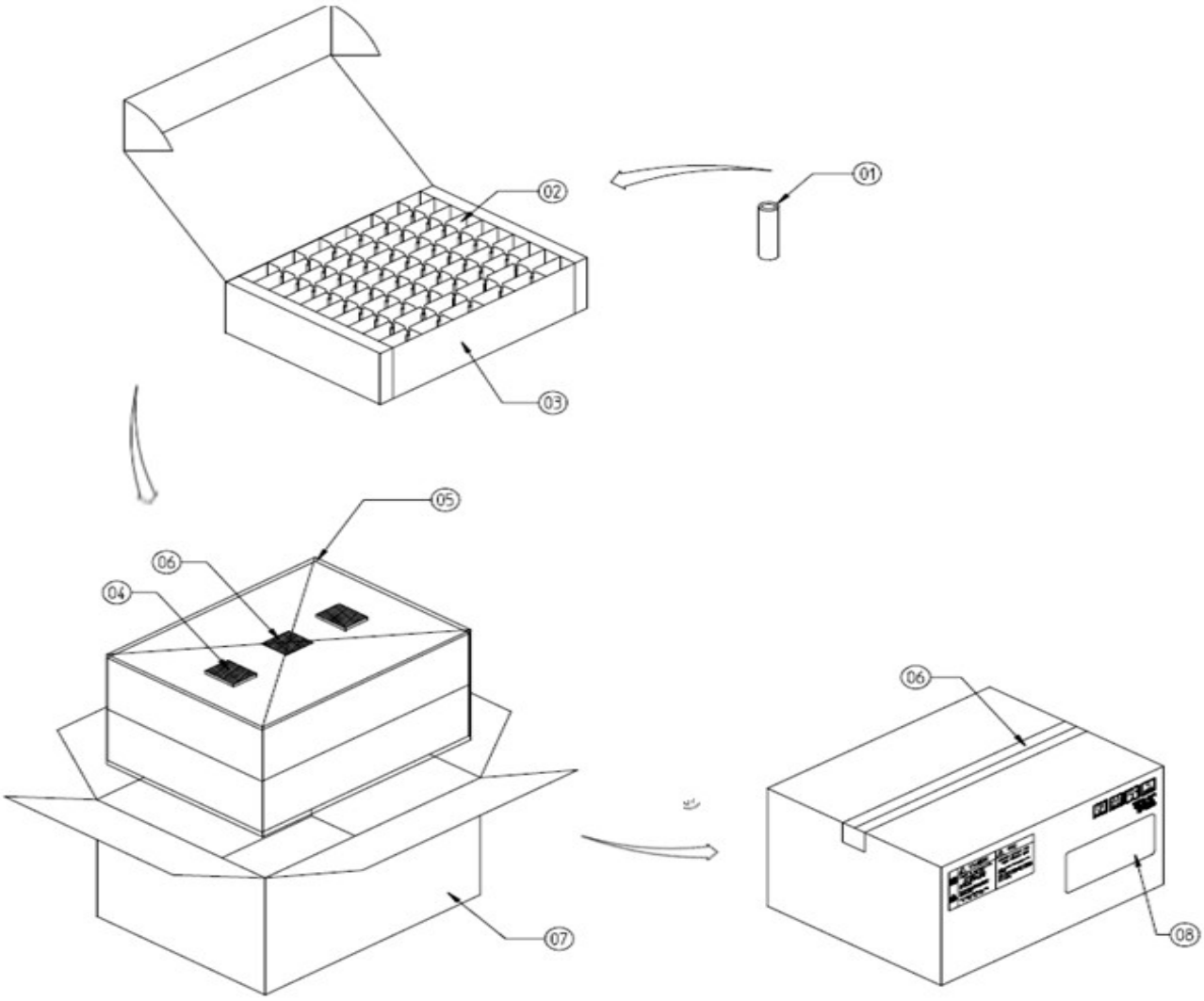

NO	PART NAME	MATERIAL	MATERIAL DIM	Q'TY	TREATMENT
01	INR18650(Ref. Model List)	BARE CELL	ø18, H65	200	NONE
02	PACKING GUIDE	MANILA	L192×W191×H67	200	NONE
03	PACKING CASE IN	SW-1(B FLUTE)	L192×W192×H68	2	NONE
04	SILICAGEL	SI	L50×W50,3G	2	NONE
05	PE BAG(LARGE)	PE	L500×W450×T0.028	1	NONE
06	TAPE	PE(OPP)	W50×T0.05	1	NONE
07	PACKING CASE OUT	DW-1(BA FLUTE)	L225×W214×H164	1	NONE
08	LABEL	ART PAPER	L52×W100	1	NONE

Proper Use and Handling of Lithium Ion Cells

See before using lithium-ion cell
Supplied by
Samsung SDI Co., Ltd.

1. General

This document has been prepared to describe the appropriate cautions and prohibitions, which the customer should take or employ when the customer uses and handles the lithium ion cell to be manufactured and supplied by Samsung SDI Co., Ltd., in order to obtain optimum performance and safety.

2. Charging

2.1. Charging current
Charging current should be less than maximum charge current specified in the product specification.

2.2. Charging voltage
Charging should be done by voltage less than that specified in the product specification.

2.3. Charging time
Continuous charging under appropriate voltage does not cause any loss of characteristics. However, the charge timer is recommended to be installed from a safety consideration, which shuts off further charging at time specified in the product specification.

2.4. Charging temperature
The cell should be charged within a range of specified temperatures in the product specification.

2.5. Reverse charging
The cell should be connected, confirming that its poles are correctly aligned. Inverse charging should be strictly prohibited. If the cell is connected improperly, it may be damaged.

3. Discharging

3.1. Discharging
3.1.1. The cell should be discharged at less than maximum discharge current specified in the product specification.

3.2. Discharging temperature
3.2.1. The cell should be discharged within a range of temperatures specified in the product specification.
3.2.2. Otherwise, it may cause loss of characteristics.

Tentative

3.3. Over-discharging

3.3.1. The system should be equipped with a device to prevent further discharging exceeding discharging cut-off voltage specified in the product specification.(over-discharging)

3.3.2. Over-discharging may cause loss of performance, characteristics, of battery function.

3.3.3. Over-discharging may occur by self-discharge if the battery is left for a very long time without any use.

3.3.4. The charger should be equipped with a device to detect cell voltage and to determine recharging procedures.

4. Storage

□

4.1. Storage conditions

4.1.1. The cell should be stored within a range of temperatures specified in the product specification.

4.1.2. Otherwise, it may cause loss of characteristics, leakage and/or rust.

4.2. Long-term storage

4.2.1. The cell should be used within a short period after charging because long-term storage may cause loss of capacity by self-discharging.

4.2.2. If long-term storage is necessary, the cell should be stored at lower voltage within a range specified in the product specification, because storage at higher voltage may cause loss of characteristics.

5. Cycle life

□

5.1. Cycle life performance

5.1.1. The cell can be charged/discharged repeatedly up to times specified in the produce specification with a certain level of capacity also specified in the product specification.

5.1.2. Cycle life may be determined by conditions of charging, discharging, operating temperature and/or storage.

6. Design of System

6.1. Connection between the cell and the battery

6.1.1. The cell should not be soldered directly with leads. Namely, the cell should be welded with leads on its terminal and then be soldered with wire or leads to soldered lead.

6.1.2. Otherwise, it may cause damage of component, such as separator and insulator, by heat generation.

Tentative

6.2 Positioning the battery in the System

6.2.1. The battery should be positioned as possible as far from heat sources and high temperature components.

6.2.2. Otherwise, it may cause loss of characteristics.

6.3. Mechanical shock protection of the battery

6.3.1. The battery should be equipped with appropriate shock absorbers in order to minimize shock.

6.3.2. Otherwise, it may cause shape distortion, leakage, heat generation and/or rupture.

6.4. Short-circuit protection of the cell

6.4.1. The cell is equipped with an insulating sleeve to protect short-circuit which may occur during transportation, battery assembly and /or system operation.

6.4.2. If the cell sleeve is damaged by some causes such as outside impact, it may cause short-circuit with some wiring inside the battery.

6.5. Connection between the battery and charger/system

6.5.1. The battery should be designed to be connected only to the specified charger and system.

6.5.2. A reverse connection of the battery, even in the specified system, should be avoided by employing special battery design such as a special terminals.

7. Battery Pack Assembly

7.1. Prohibition of usage of damaged cell

7.1.1. The cell should be inspected visually before battery assembly.

7.1.2. The cell should not be used if sleeve-damage, can-distortion and/or electrolyte-smell is detected.

7.2. Transportation

7.2.1. If the cell is necessary to transport to order place, such as the battery manufacturer, careful precautions should be taken to avoid damage of cell.

8. Others

8.1. Disassembly

8.1.1. The cell should not be dismantled from the battery pack.

8.1.2. Internal short-circuit caused by disassembly may lead to heat generation and/or venting.

8.1.3. When the electrolyte is coming in contact with the skin or eyes, wash immediately with fresh water and seek medical advice.

Tentative

8.2. Short-circuiting

8.2.1. Short-circuit results in very high current which leads to heat generation.

8.2.2. An appropriate circuitry should be employed to protect accidental short-circuiting.

8.3. Incineration

8.3.1 Incinerating and disposing of the cell in fire are strictly prohibited, because it may cause rupture.

8.4. Immersion

8.4.1 Soaking the cell in water is strictly prohibited, because it may cause melt of components to damaged to functions.

8.5. Mixing use

8.5.1. Different types of cell, or same types but different manufacturer's cell may lead to cell rupture or damage to system due to the different characteristics of cell.

8.6. Battery disposal

8.6.1. Although the cell contains no environmentally hazardous component, such as lead or cadmium. the battery should be disposed according to the local regulations when it is disposed.

8.6.2. The cell should be disposed with a discharged state to avoid heat generation by an inadvertent short-circuit.

8.7. Caution - The Battery used in this device may present a risk of fire or chemical burn if mistreated. Do not disassemble, heat above 100°C or incinerate. Replace battery with Samsung SDI battery only. Use of another battery may present a risk of fire or explosion. Dispose of used battery promptly. Keep away from children. Do not disassemble and do not dispose of in fire.

8.8. Warning – Attached

Tentative

□ [illegible]

[illegible]	[illegible]	[illegible]	[illegible]	[illegible]	[illegible]	[illegible]	[illegible]
□ [illegible]	[illegible]	[illegible]	[illegible]	[illegible]	[illegible]	[illegible]	[illegible]
□ [illegible]	[illegible]	[illegible]	[illegible]	[illegible]	[illegible]	[illegible]	[illegible]
□ [illegible]	[illegible]	[illegible]	[illegible]	[illegible]	[illegible]	[illegible]	[illegible]
□ [illegible]	[illegible]	[illegible]	[illegible]	[illegible]	[illegible]	[illegible]	[illegible]
□ [illegible]	[illegible]	[illegible]	[illegible]	[illegible]	[illegible]	[illegible]	[illegible]
□ [illegible]	[illegible]	[illegible]	[illegible]	[illegible]	[illegible]	[illegible]	[illegible]
[illegible]	□ [illegible]	[illegible]	[illegible]	[illegible]	[illegible]	[illegible]	[illegible]
	□ [illegible]	[illegible]	[illegible]	[illegible]	[illegible]	[illegible]	[illegible]
[illegible]	□ [illegible]	[illegible]	[illegible]	[illegible]	[illegible]	[illegible]	[illegible]
	□ [illegible]	[illegible]	[illegible]	[illegible]	[illegible]	[illegible]	[illegible]
□ [illegible]	[illegible]	[illegible]	[illegible]	[illegible]	[illegible]	[illegible]	[illegible]
□ [illegible]	[illegible]	[illegible]	[illegible]	[illegible]	[illegible]	[illegible]	[illegible]
□ [illegible]	□[illegible]	□[illegible]	□[illegible]	□[illegible]	□[illegible]	□[illegible]	□[illegible]
□ [illegible]	[illegible]	[illegible]	[illegible]	[illegible]	[illegible]	[illegible]	[illegible]
□ [illegible]	[illegible]	[illegible]	[illegible]	[illegible]	[illegible]	[illegible]	[illegible]

□

[illegible]

* Current of cell which full-charging shall be terminated.

** Voltage condition of BMS which shall be shut down.

*** Under 1.0V voltage, do not charge the cell.

**** Voltage range of cell which shall be charged by Pre-charging.

□ [illegible]

[illegible]	[illegible]	[illegible]	[illegible]	[illegible]	[illegible]	[illegible]	[illegible]
□ [illegible]	□	□	□	□	□	□	□
□ [illegible]					□	□	□
□ [illegible]					□	□	□
□ [illegible]	□	□	□	□	□	□	□
□ [illegible]						□	□
□ [illegible]						□	□

□ [illegible]

□ [illegible]

Tentative

Inaccurate handling of lithium ion and lithium ion polymer rechargeable battery may cause leakage, heat, smoke, an explosion, or fire.

This could cause deterioration of performance or failure. Please be sure to follow instructions carefully.

1.1. Storage

Store the battery at low temperature (below 20°C is recommended), low humidity, no dust and no corrosive gas atmosphere.

1.2. Safety precaution and prohibitions

To assure product safety, describe the following precautions in the instruction manual of the application.

■ Electrical misusage

Use dedicated charger.

Use or charge the battery only in the dedicated application.

Don't charge the battery by an electric outlet directly or a cigarette lighter charger.

Don't charge the battery reversely.

■ Environmental misusage

Don't leave the battery near the fire or a heated source.

Don't throw the battery into the fire.

Don't leave, charge or use the battery in a car or similar place where inside of temperature may be over 60°C.

Don't immerse, throw, wet the battery in water / seawater.

■ others

Don't fold the battery cased with laminated film such as pouch and Polymer.

Don't store the battery in a pocket or a bag together with metallic objects such as keys, necklaces, hairpins, coins, or screws.

Don't short circuit (+) and (-) terminals with metallic object intentionally.

Don't pierce the battery with a sharp object such as a needle, screw drivers.

Don't heat partial area of the battery with heated objects such as soldering iron.

Don't hit with heavy objects such as a hammer, weight.

Tentative

Don't step on the battery and throw or drop the battery on the hard floor to avoid mechanical shock.

Don't disassemble the battery or modify the battery design including electric circuit.

Don't solder on the battery directly.

Don't use seriously scared or deformed battery.

Don't put the battery into a microwave oven, dryer ,or high-pressure container.

Don't use or assemble the battery with other makers' batteries, different types and/or models of batteries such as dry batteries, nickel-metal hydride batteries, or nickel-cadmium batteries.

Don't use or assemble old and new batteries together.

Stop charging the battery if charging isn't completed within the specified time.

Stop using the battery if the battery becomes abnormally hot, order, discoloration, deformation, or abnormal conditions is detected during use, charge, or storage.

Keep away from fire immediately when leakage or foul odors are detected. If liquid leaks onto your skin or cloths, wash well with fresh water immediately.

If liquid leaking from the battery gets into your eyes, don't rub your eyes and wash them with clean water and go to see a doctor immediately.

If the terminals of the battery become dirty, wipe with a dry cloth before using the battery.

The battery can be used within the following temperature ranges. Don't exceed these ranges.

Charge temperature ranges : 0°C ~ 45°C

Discharge Temperature ranges : -10°C ~ 60°C

Store the battery at temperature below 60°C

Cover terminals with proper insulating tape before disposal.

■ Electrical misusage

Battery must be charge with constant current-constant voltage (CC/CV).

Charge current must be controlled by specified value in Cell specification.

Cut-off Voltage of charging must be 4.20V

Charger must stop charging battery by detecting either charging time or current specified in Cell's specification.

Discharge current must be controlled by specified value in Cell's specification.

Cut-off Voltage of discharging must be over 2.65V.

Tentative

■ others

Keep the battery away from babies and children to avoid any accidents such as swallow.

If younger children use the battery, their guardians should explain the proper handling method and precaution before using.

Before using the battery, be sure to read the user's manual and precaution of it's handling.

Before using charger, be sure to read the user's manual of the charger.

Before installing and removing the battery from application, be sure to read user's manual of the application.

Replace the battery when using time of battery becomes much shorter than usual.

Cover terminals with insulating tape before proper disposal.

If the battery is needed to be stored for an long period, battery should be removed from the application and stored in a place where humidity and temperature are low.

While the battery is charged, used and stored, keep it away from object materials with static electric chargers.

■ Quarantine

Packages that are crushed, punctured or torn open to reveal contents should not be transported. Such packages should be isolated until the shipper has been consulted, provided instructions and, if appropriate, arranged to have the product inspected and repacked.

■ Spilled Product

In the event that damage to packaging results in the release of cells or batteries, the spilled products should be promptly collected and segregated and the shipper should be contacted for instructions.

To prevent the deterioration of the battery performance caused by heat, battery shall be positioned away from the area where heat is generated in the application and the charger.

Tentative

[illegible]

Be sure adopting proper safe device such as PTC specified type or model in Cell Specification. If you intend to adopt different safety device which is not specified in Cell Specification, please contact Samsung SDI to investigate any potential safety problem.

Be sure designing 2nd protective devices such as PTC & PCM at the same time to protect Cell just in case one protective device is fault.

Please contact following offices when you need any help including safety concerns.

[illegible]

- [illegible]
  428-5, Gongsae-dong, Kiheung-gu, Yongin, Kyunggi-do, Korea
  Tel: +82-31-8006-3100, Fax : +82-31-210-7887

- [illegible]
  508, Sungsung-Dong, Cheonan, Chungchongnam-Do, Korea
  Tel: +82-41-560-3114, Fax : +82-41-550-3399

- [illegible]
  3655 North First St. San Jose CA 95134
  Tel: +1-408-544-4541, Fax : +1-949-260-2221

- [illegible]
  9F-1,399 Ruey Kuang Road, Neihu, Taipei Taiwan
  Tel: +886-2-2656-8300, Fax : +886-2-2656-8329

- [illegible]
  Lot 635 & 660, Kawasan Perindustrian, Tuanku Jaafar, 71450
  Sungai Gadut, Negeri Sembilan Darul Khusus, Malaysia
  Tel: (+60)6-677-6160, 6153

Tentative

Features

- Low On-Resistance
  - 13mΩ @ V_{GS} = -10V
  - 16mΩ @ V_{GS} = -4.5V
  - 22mΩ @ V_{GS} = -2.5V
- Low Gate Threshold Voltage
- Low Input Capacitance
- Fast Switching Speed
- Low Input/Output Leakage
- **Totally Lead-Free & Fully RoHS Compliant (Notes 1 & 2)**
- **Halogen and Antimony Free. "Green" Device (Note 3)**
- **Qualified to AEC-Q101 Standards for High Reliability**
- **An Automotive-Compliant Part is Available Under Separate Datasheet (DMP2022LSSQ)**

Mechanical Data

- Case: SO-8
- Case Material: Molded Plastic, "Green" Molding Compound. UL Flammability Classification Rating 94V-0
- Moisture Sensitivity: Level 1 per J-STD-020
- Terminals Connections: See Diagram
- Terminals: Finish - Matte Tin Annealed over Copper Leadframe. Solderable per MIL-STD-202, Method 208 e3
- Weight: 0.072g (Approximate)

SO-8

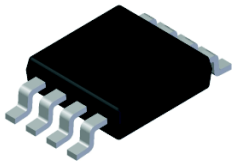

Top View

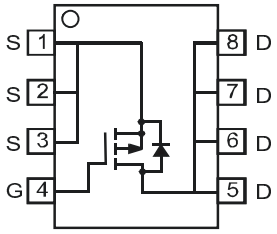

Top View
Internal Schematic

Ordering Information (Note 4)

Part Number	Case	Packaging
DMP2022LSS-13	SO-8	2500/Tape & Reel

Notes:
1. No purposely added lead. Fully EU Directive 2002/95/EC (RoHS) & 2011/65/EU (RoHS 2) compliant.
2. See http://www.diodes.com/quality/lead_free.html for more information about Diodes Incorporated's definitions of Halogen- and Antimony-free, "Green" and Lead-free.
3. Halogen- and Antimony-free "Green" products are defined as those which contain <900ppm bromine, <900ppm chlorine (<1500ppm total Br + Cl) and <1000ppm antimony compounds.
4. For packaging details, go to our website at https://www.diodes.com/design/support/packaging/diodes-packaging/.

Marking Information

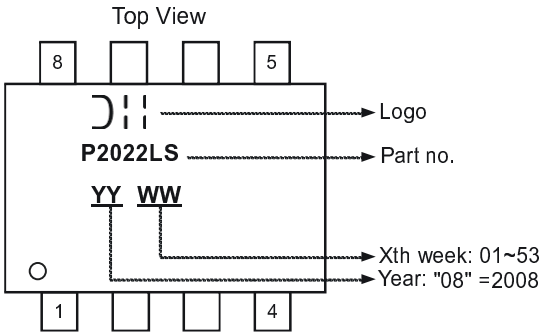

© Diodes Incorporated

Maximum Ratings (@T_A = +25°C, unless otherwise specified.)

Characteristic			Symbol	Value	Unit
Drain-Source Voltage			V_{DSS}	-20	V
Gate-Source Voltage			V_{GSS}	±12	V
Drain Current (Note 5)	Steady State	T_A = +25°C T_A = +70°C	I_D	-10 -8	A
Pulsed Drain Current (Note 6)			I_{DM}	-90	A

Thermal Characteristics

Characteristic	Symbol	Value	Unit
Total Power Dissipation (Note 5)	P_D	2.5	W
Thermal Resistance, Junction to Ambient	$R_{\theta JA}$	50	°C/W
Operating and Storage Temperature Range	T_J, T_{STG}	-55 to +150	°C

Notes: 5. Device mounted on 2 oz. Copper pads on FR-4 PCB.
6. Pulse width ≤10μS, Duty Cycle ≤1%.

Electrical Characteristics (@T_A = +25°C, unless otherwise specified.)

Characteristic	Symbol	Min	Typ	Max	Unit	Test Condition
OFF CHARACTERISTICS (Note 7)						
Drain-Source Breakdown Voltage	BV_{DSS}	-20	—	—	V	V_{GS} = 0V, I_D = -250μA
Zero Gate Voltage Drain Current	I_{DSS}	—	—	-1	μA	V_{DS} = -20V, V_{GS} = 0V
Gate-Source Leakage	I_{GSS}	—	—	±100	nA	V_{GS} = ±12V, V_{DS} = 0V
ON CHARACTERISTICS (Note 7)						
Gate Threshold Voltage	$V_{GS(TH)}$	-0.6	-0.77	-1.1	V	V_{DS} = V_{GS}, I_D = -250μA
Static Drain-Source On-Resistance	$R_{DS(ON)}$	—	8	13	mΩ	V_{GS} = -10V, I_D = -10A
		—	11	16		V_{GS} = -4.5V, I_D = -9A
		—	17	22		V_{GS} = -2.5V, I_D = -8A
Forward Transconductance	g_{fs}	—	28	—	S	V_{DS} = -10V, I_D = -10A
Diode Forward Voltage (Note 7)	V_{SD}	-0.5	-0.68	-1.2	V	V_{GS} = 0V, I_S = -3A
DYNAMIC CHARACTERISTICS (Note 8)						
Input Capacitance	C_{iss}	—	2444	—	pF	V_{DS} = -10V, V_{GS} = 0V f = 1.0MHz
Output Capacitance	C_{oss}	—	594	—	pF	
Reverse Transfer Capacitance	C_{rss}	—	556	—	pF	
Gate Resistance	R_G	—	2.0	—	Ω	V_{GS} = 0V, V_{DS} = 0V, f = 1MHz
SWITCHING CHARACTERISTICS (Note 8)						
Total Gate Charge	Q_g	—	28.1 56.9	—	nC	V_{DS} = -10V, V_{GS} = -4.5V, I_D = -10A V_{DS} = -10V, V_{GS} = -10V, I_D = -10A
Gate-Source Charge	Q_{gs}	—	3.4	—		V_{DS} = -10V, V_{GS} = -10V, I_D = -10A
Gate-Drain Charge	Q_{gd}	—	11.9	—		V_{DS} = -10V, V_{GS} = -10V, I_D = -10A
Turn-On Delay Time	$t_{D(ON)}$	—	7.5	15	ns	V_{DD} = -15V, I_D = -1A, V_{GS} = -10V, R_{GEN} = 6Ω
Turn-On Rise Time	t_R	—	9.9	20		
Turn-Off Delay Time	$t_{D(OFF)}$	—	108.0	216		
Turn-Off Fall Time	t_F	—	76.5	153		

Notes: 7. Short duration pulse test used to minimize self-heating effect.
8. Guaranteed by design. Not subject to product testing.

© Diodes Incorporated

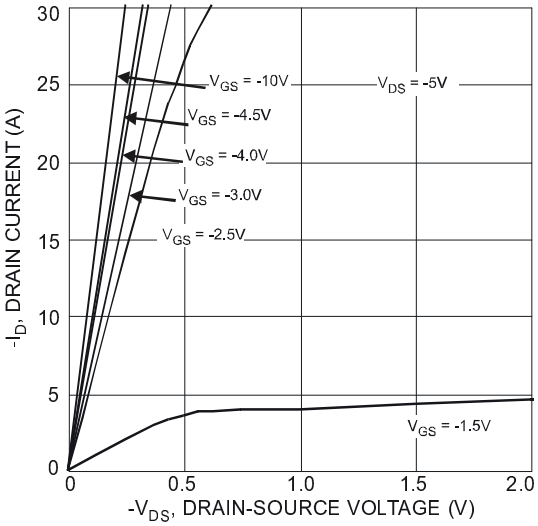

Fig. 1 Typical Output Characteristic

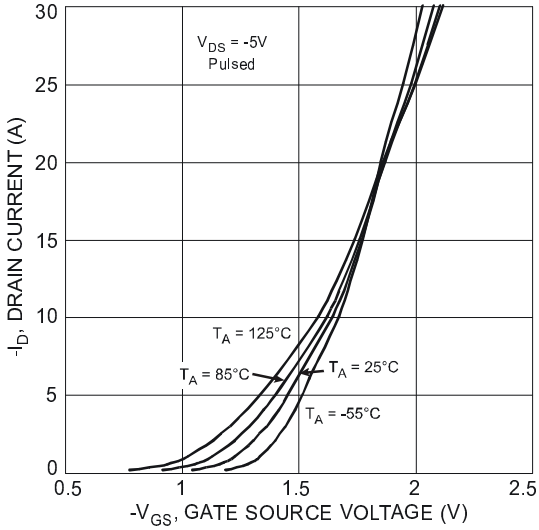

Fig. 2 Typical Transfer Characteristics

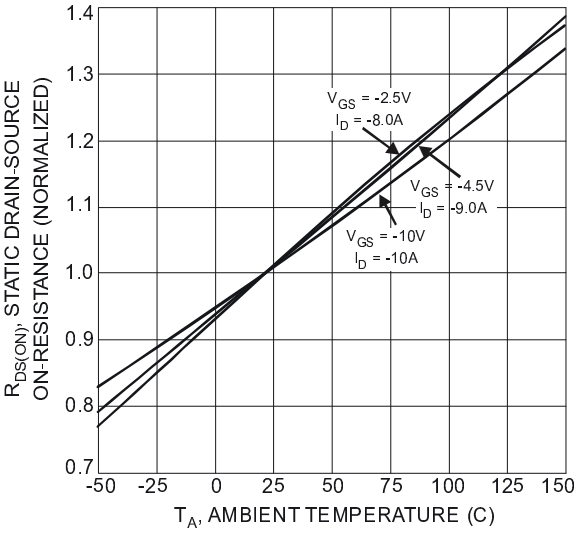

Fig. 3 Normalized Static Drain-Source On-Resistance vs. Ambient Temperature

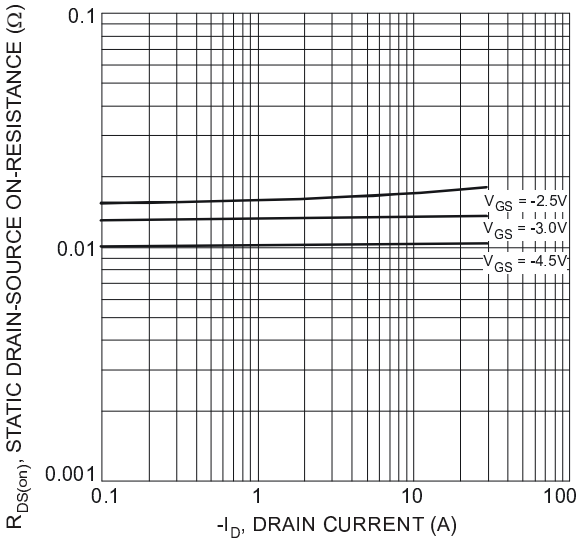

Fig. 4 On-Resistance vs. Drain Current and Gate Voltage

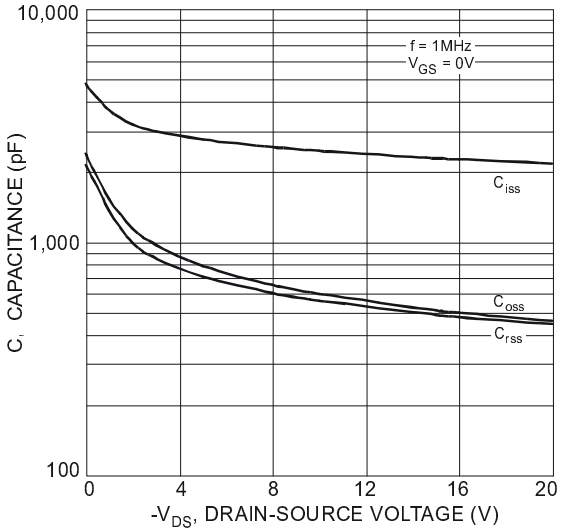

Fig. 5 Typical Total Capacitance

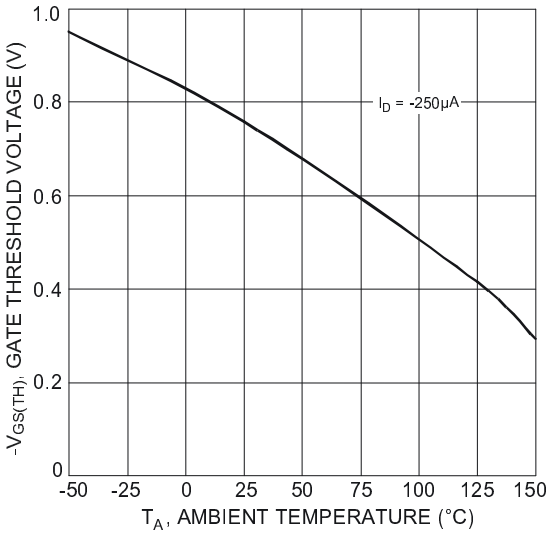

Fig. 6 Gate Threshold Variation vs. Ambient Temperature

© Diodes Incorporated

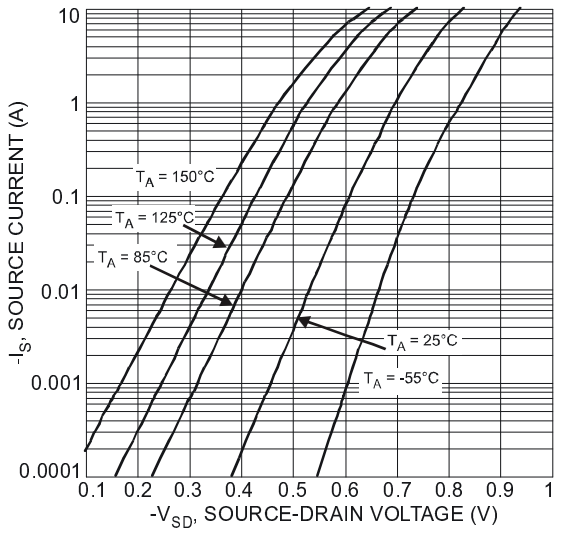

Fig. 7 Reverse Drain Current vs. Source-Drain Voltage

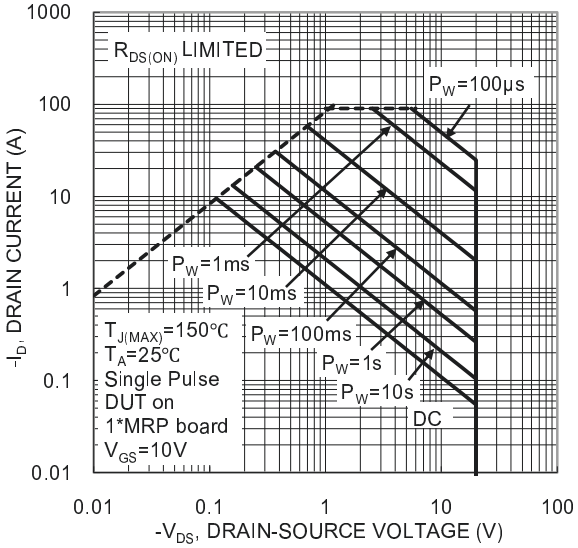

Figure 8. SOA, Safe Operation Area

© Diodes Incorporated

Package Outline Dimensions

Please see http://www.diodes.com/package-outlines.html for the latest version.

SO-8

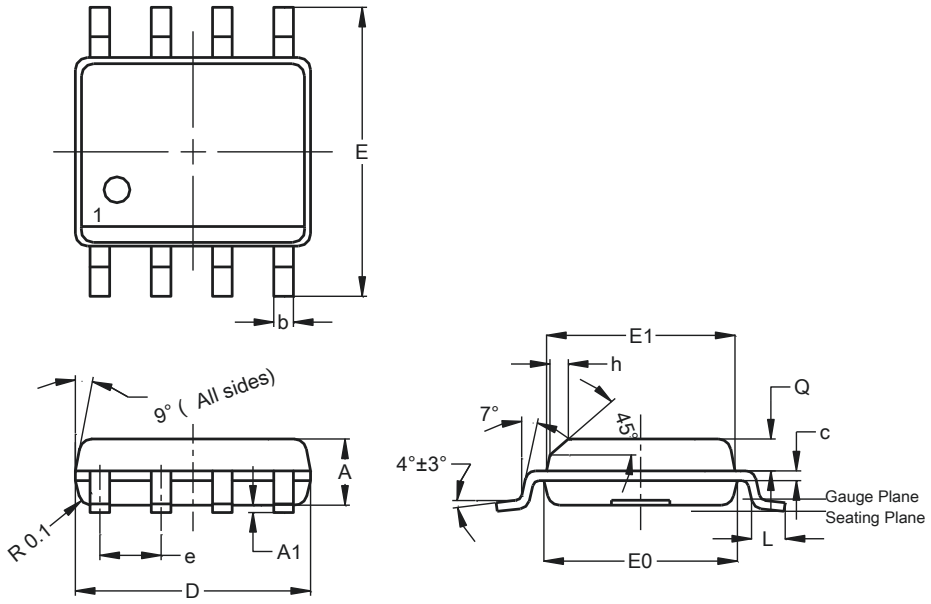

SO-8			
Dim	Min	Max	Typ
A	1.40	1.50	1.45
A1	0.10	0.20	0.15
b	0.30	0.50	0.40
c	0.15	0.25	0.20
D	4.85	4.95	4.90
E	5.90	6.10	6.00
E1	3.80	3.90	3.85
E0	3.85	3.95	3.90
e	--	--	1.27
h	-	--	0.35
L	0.62	0.82	0.72
Q	0.60	0.70	0.65
All Dimensions in mm			

Suggested Pad Layout

Please see http://www.diodes.com/package-outlines.html for the latest version.

SO-8

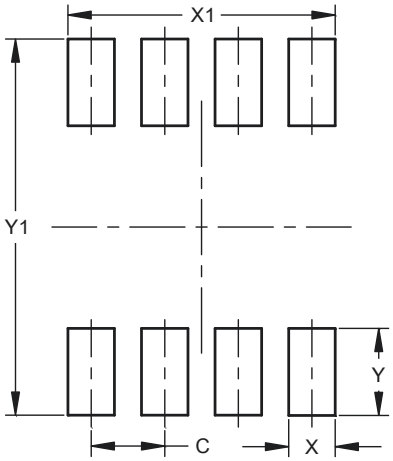

Dimensions	Value (in mm)
C	1.27
X	0.802
X1	4.612
Y	1.505
Y1	6.50

© Diodes Incorporated

IMPORTANT NOTICE

DIODES INCORPORATED MAKES NO WARRANTY OF ANY KIND, EXPRESS OR IMPLIED, WITH REGARDS TO THIS DOCUMENT, INCLUDING, BUT NOT LIMITED TO, THE IMPLIED WARRANTIES OF MERCHANTABILITY AND FITNESS FOR A PARTICULAR PURPOSE (AND THEIR EQUIVALENTS UNDER THE LAWS OF ANY JURISDICTION).

Diodes Incorporated and its subsidiaries reserve the right to make modifications, enhancements, improvements, corrections or other changes without further notice to this document and any product described herein. Diodes Incorporated does not assume any liability arising out of the application or use of this document or any product described herein; neither does Diodes Incorporated convey any license under its patent or trademark rights, nor the rights of others. Any Customer or user of this document or products described herein in such applications shall assume all risks of such use and will agree to hold Diodes Incorporated and all the companies whose products are represented on Diodes Incorporated website, harmless against all damages.

Diodes Incorporated does not warrant or accept any liability whatsoever in respect of any products purchased through unauthorized sales channel. Should Customers purchase or use Diodes Incorporated products for any unintended or unauthorized application, Customers shall indemnify and hold Diodes Incorporated and its representatives harmless against all claims, damages, expenses, and attorney fees arising out of, directly or indirectly, any claim of personal injury or death associated with such unintended or unauthorized application.

Products described herein may be covered by one or more United States, international or foreign patents pending. Product names and markings noted herein may also be covered by one or more United States, international or foreign trademarks.

This document is written in English but may be translated into multiple languages for reference. Only the English version of this document is the final and determinative format released by Diodes Incorporated.

LIFE SUPPORT

Diodes Incorporated products are specifically not authorized for use as critical components in life support devices or systems without the express written approval of the Chief Executive Officer of Diodes Incorporated. As used herein:

A. Life support devices or systems are devices or systems which:

1. are intended to implant into the body, or
2. support or sustain life and whose failure to perform when properly used in accordance with instructions for use provided in the labeling can be reasonably expected to result in significant injury to the user.

B. A critical component is any component in a life support device or system whose failure to perform can be reasonably expected to cause the failure of the life support device or to affect its safety or effectiveness.

Customers represent that they have all necessary expertise in the safety and regulatory ramifications of their life support devices or systems, and acknowledge and agree that they are solely responsible for all legal, regulatory and safety-related requirements concerning their products and any use of Diodes Incorporated products in such safety-critical, life support devices or systems, notwithstanding any devices- or systems-related information or support that may be provided by Diodes Incorporated. Further, Customers must fully indemnify Diodes Incorporated and its representatives against any damages arising out of the use of Diodes Incorporated products in such safety-critical, life support devices or systems.

Copyright © 2017, Diodes Incorporated

www.diodes.com

ON Semiconductor

Is Now

To learn more about onsemi™, please visit our website at
www.onsemi.com

onsemi and onsemi and other names, marks, and brands are registered and/or common law trademarks of Semiconductor Components Industries, LLC dba "**onsemi**" or its affiliates and/or subsidiaries in the United States and/or other countries. **onsemi** owns the rights to a number of patents, trademarks, copyrights, trade secrets, and other intellectual property. A listing of **onsemi** product/patent coverage may be accessed at www.onsemi.com/site/pdf/Patent-Marking.pdf. **onsemi** reserves the right to make changes at any time to any products or information herein, without notice. The information herein is provided "as-is" and **onsemi** makes no warranty, representation or guarantee regarding the accuracy of the information, product features, availability, functionality, or suitability of its products for any particular purpose, nor does **onsemi** assume any liability arising out of the application or use of any product or circuit, and specifically disclaims any and all liability, including without limitation special, consequential or incidental damages. Buyer is responsible for its products and applications using **onsemi** products, including compliance with all laws, regulations and safety requirements or standards, regardless of any support or applications information provided by **onsemi**. "Typical" parameters which may be provided in **onsemi** data sheets and/or specifications can and do vary in different applications and actual performance may vary over time. All operating parameters, including "Typicals" must be validated for each customer application by customer's technical experts. **onsemi** does not convey any license under any of its intellectual property rights nor the rights of others. **onsemi** products are not designed, intended, or authorized for use as a critical component in life support systems or any FDA Class 3 medical devices or medical devices with a same or similar classification in a foreign jurisdiction or any devices intended for implantation in the human body. Should Buyer purchase or use **onsemi** products for any such unintended or unauthorized application, Buyer shall indemnify and hold **onsemi** and its officers, employees, subsidiaries, affiliates, and distributors harmless against all claims, costs, damages, and expenses, and reasonable attorney fees arising out of, directly or indirectly, any claim of personal injury or death associated with such unintended or unauthorized use, even if such claim alleges that **onsemi** was negligent regarding the design or manufacture of the part. **onsemi** is an Equal Opportunity/Affirmative Action Employer. This literature is subject to all applicable copyright laws and is not for resale in any manner. Other names and brands may be claimed as the property of others.

ON Semiconductor®

BC846 / BC847 / BC848 / BC850
NPN Epitaxial Silicon Transistor

Features

- Switching and Amplifier Applications
- Suitable for Automatic Insertion in Thick and Thin-film Circuits
- Low Noise: BC850
- Complement to BC856, BC857, BC858, BC859, and BC860

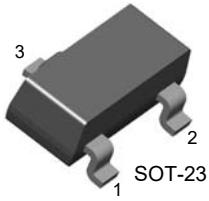

1. Base 2. Emitter 3. Collector

Ordering Information(1)

Part Number	Marking	Package	Packing Method
BC846AMTF	8AA	SOT-23 3L	Tape and Reel
BC846BMTF	8AB	SOT-23 3L	Tape and Reel
BC846CMTF	8AC	SOT-23 3L	Tape and Reel
BC847AMTF	8BA	SOT-23 3L	Tape and Reel
BC847BMTF	8BB	SOT-23 3L	Tape and Reel
BC847CMTF	8BC	SOT-23 3L	Tape and Reel
BC848BMTF	8CB	SOT-23 3L	Tape and Reel
BC848CMTF	8CC	SOT-23 3L	Tape and Reel
BC850AMTF	8EA	SOT-23 3L	Tape and Reel
BC850CMTF	8EC	SOT-23 3L	Tape and Reel

Note:

1. Affix “-A,-B,-C” means h_{FE} classification. Affix “-M” means SOT-23 package. Affix “-TF” means the tape and reel type packing.

© 2002 Semiconductor Components Industries, LLC.

Absolute Maximum Ratings

Stresses exceeding the absolute maximum ratings may damage the device. The device may not function or be operable above the recommended operating conditions and stressing the parts to these levels is not recommended. In addition, extended exposure to stresses above the recommended operating conditions may affect device reliability. The absolute maximum ratings are stress ratings only. Values are at T_A = 25°C unless otherwise noted.

Symbol	Parameter		Value	Unit
V_{CBO}	Collector-Base Voltage	BC846	80	V
		BC847 / BC850	50	
		BC848	30	
V_{CEO}	Collector-Emitter Voltage	BC846	65	V
		BC847 / BC850	45	
		BC848	30	
V_{EBO}	Emitter-Base Voltage	BC846 / BC847	6	V
		BC848 / BC850	5	
I_C	Collector Current (DC)		100	mA
T_J	Junction Temperature		150	°C
T_{STG}	Storage Temperature Range		-65 to +150	°C

Thermal Characteristics[2]

Values are at T_A = 25°C unless otherwise noted.

Symbol	Parameter	Value	Unit
P_D	Power Dissipation	310	mW
	Derate Above 25°C	2.48	mW/°C
$R_{\theta JA}$	Thermal Resistance, Junction-to-Ambient	403	°C/W

Note:

2. PCB size: FR-4, 76 mm x 114 mm x 1.57 mm (3.0 inch x 4.5 inch x 0.062 inch) with minimum land pattern size.

Electrical Characteristics[3]

Values are at T_A = 25°C unless otherwise noted.

Symbol	Parameter		Conditions	Min.	Typ.	Max.	Unit
I_{CBO}	Collector Cut-Off Current		V_{CB} = 30 V, I_E = 0			15	nA
h_{FE}	DC Current Gain		V_{CE} = 5 V, I_C = 2 mA	110		800	
V_{CE}(sat)	Collector-Emitter Saturation Voltage		I_C = 10 mA, I_B = 0.5 mA		90	250	mV
			I_C = 100 mA, I_B = 5 mA		200	600	
V_{BE}(sat)	Collector-Base Saturation Voltage		I_C = 10 mA, I_B = 0.5 mA		700		mV
			I_C = 100 mA, I_B = 5 mA		900		
V_{BE}(on)	Base-Emitter On Voltage		V_{CE} = 5 V, I_C = 2 mA	580	660	700	mV
			V_{CE} = 5 V, I_C = 10 mA			720	
f_T	Current Gain Bandwidth Product		V_{CE} = 5 V, I_C = 10 mA, f = 100 MHz		300		MHz
C_{ob}	Output Capacitance		V_{CB} = 10 V, I_E = 0, f = 1 MHz		3.5	6.0	pF
C_{ib}	Input Capacitance		V_{EB} = 0.5 V, I_C = 0, f = 1 MHz		9		pF
NF	Noise Figure	BC846 / BC847 / BC848	V_{CE} = 5 V, I_C = 200 μA, R_G = 2 kΩ, f = 1 kHz		2.0	10.0	dB
		BC850			1.2	4.0	
		BC850	V_{CE} = 5 V, I_C = 200 μA, R_G = 2 kΩ, f = 30 to 15000 Hz		1.4	3.0	

Note:

3. Pulse test: pulse width ≤ 300 μs, duty cycle ≤ 2%

h_{FE} Classification

Classification	A	B	C
h_{FE}	110 ~ 220	200 ~ 450	420 ~ 800

Typical Performance Characteristics

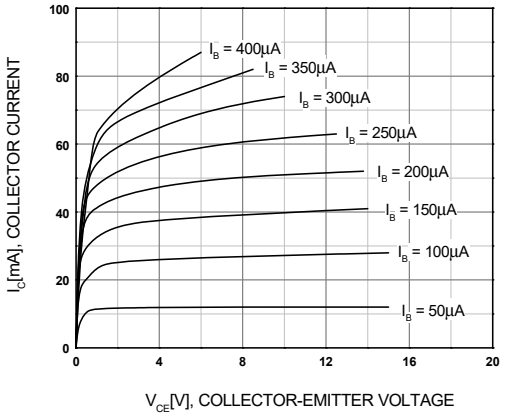

Figure 1. Static Characteristic

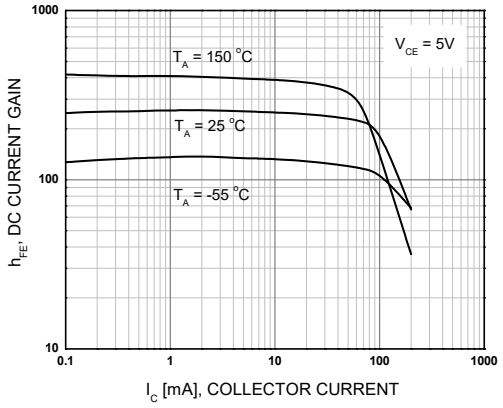

Figure 2. DC Current Gain

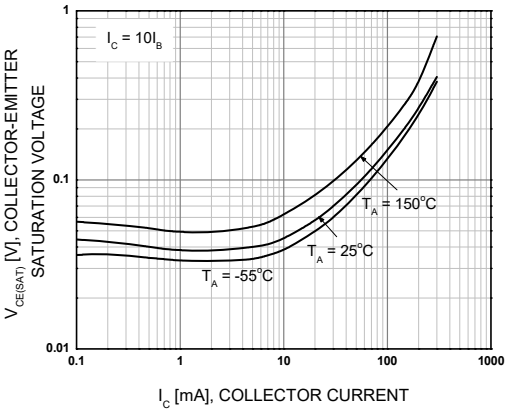

Figure 3. Collector-Emitter Saturation Voltage

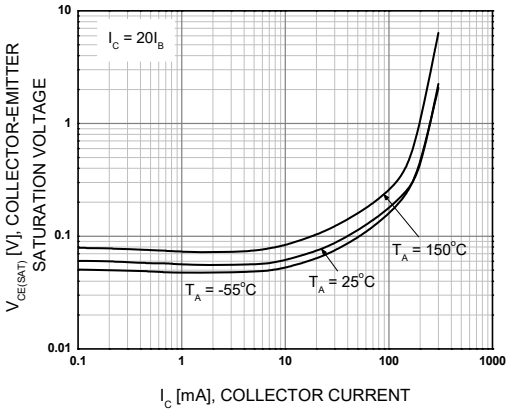

Figure 4. Collector-Emitter Saturation Voltage

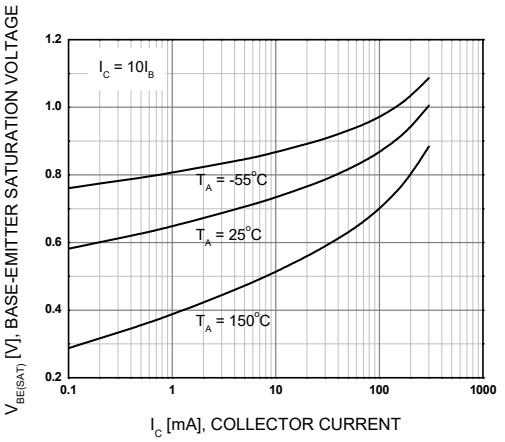

Figure 5. Base-Emitter Saturation Voltage

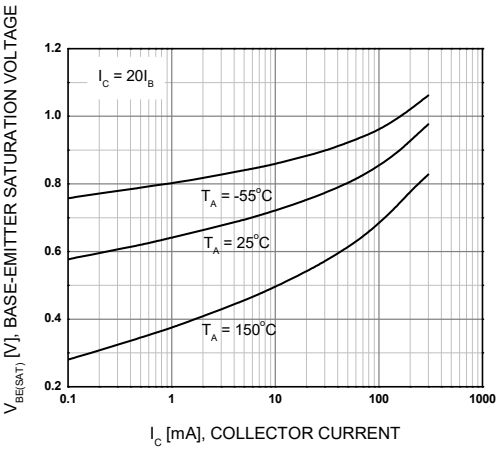

Figure 6. Base-Emitter Saturation Voltage

Typical Performance Characteristics (Continued)

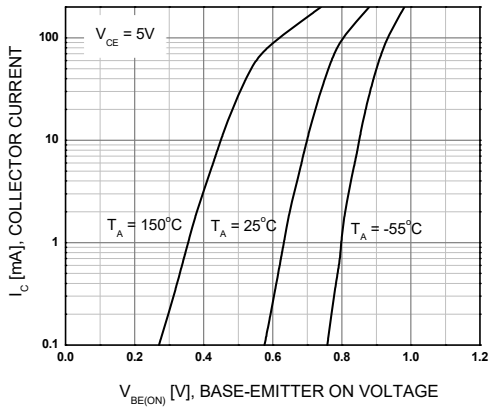

Figure 7. Base-Emitter On Voltage

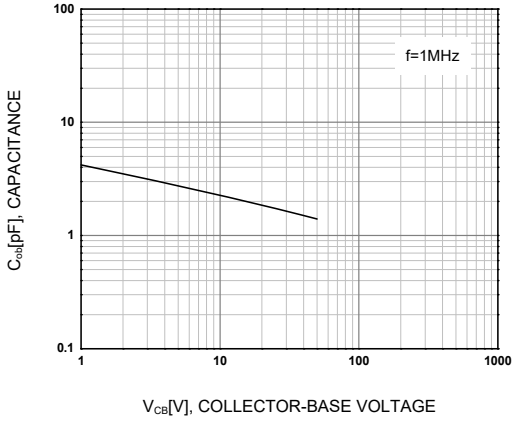

Figure 8. Collector Output Capacitance

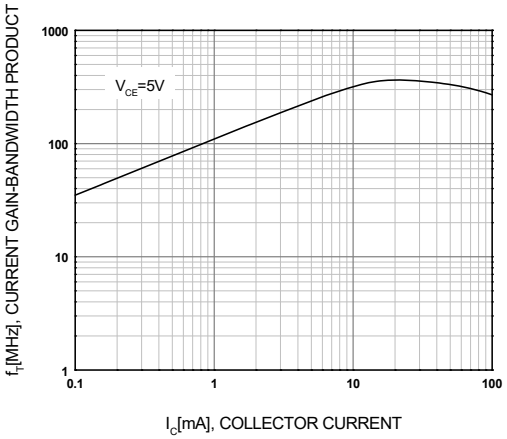

Figure 9. Current Gain Bandwidth Product

ON Semiconductor and ON are trademarks of Semiconductor Components Industries, LLC dba ON Semiconductor or its subsidiaries in the United States and/or other countries. ON Semiconductor owns the rights to a number of patents, trademarks, copyrights, trade secrets, and other intellectual property. A listing of ON Semiconductor's product/patent coverage may be accessed at www.onsemi.com/site/pdf/Patent−Marking.pdf. ON Semiconductor reserves the right to make changes without further notice to any products herein. ON Semiconductor makes no warranty, representation or guarantee regarding the suitability of its products for any particular purpose, nor does ON Semiconductor assume any liability arising out of the application or use of any product or circuit, and specifically disclaims any and all liability, including without limitation special, consequential or incidental damages. Buyer is responsible for its products and applications using ON Semiconductor products, including compliance with all laws, regulations and safety requirements or standards, regardless of any support or applications information provided by ON Semiconductor. "Typical" parameters which may be provided in ON Semiconductor data sheets and/or specifications can and do vary in different applications and actual performance may vary over time. All operating parameters, including "Typicals" must be validated for each customer application by customer's technical experts. ON Semiconductor does not convey any license under its patent rights nor the rights of others. ON Semiconductor products are not designed, intended, or authorized for use as a critical component in life support systems or any FDA Class 3 medical devices or medical devices with a same or similar classification in a foreign jurisdiction or any devices intended for implantation in the human body. Should Buyer purchase or use ON Semiconductor products for any such unintended or unauthorized application, Buyer shall indemnify and hold ON Semiconductor and its officers, employees, subsidiaries, affiliates, and distributors harmless against all claims, costs, damages, and expenses, and reasonable attorney fees arising out of, directly or indirectly, any claim of personal injury or death associated with such unintended or unauthorized use, even if such claim alleges that ON Semiconductor was negligent regarding the design or manufacture of the part. ON Semiconductor is an Equal Opportunity/Affirmative Action Employer. This literature is subject to all applicable copyright laws and is not for resale in any manner.

PUBLICATION ORDERING INFORMATION

LITERATURE FULFILLMENT:
Literature Distribution Center for ON Semiconductor
19521 E. 32nd Pkwy, Aurora, Colorado 80011 USA
Phone: 303−675−2175 or 800−344−3860 Toll Free USA/Canada
Fax: 303−675−2176 or 800−344−3867 Toll Free USA/Canada
Email: orderlit@onsemi.com

N. American Technical Support: 800−282−9855 Toll Free USA/Canada
Europe, Middle East and Africa Technical Support:
Phone: 421 33 790 2910
Japan Customer Focus Center
Phone: 81−3−5817−1050

ON Semiconductor Website: **www.onsemi.com**

Order Literature: http://www.onsemi.com/orderlit

For additional information, please contact your local Sales Representative

MCP1700

Low Quiescent Current LDO

Features

- AEC-Q100 Qualified and PPAP Capable
- 1.6 µA Typical Quiescent Current
- Input Operating Voltage Range: 2.3V to 6.0V
- Output Voltage Range: 1.2V to 5.0V
- 250 mA Output Current for Output Voltages ≥ 2.5V
- 200 mA Output Current for Output Voltages < 2.5V
- Low Dropout (LDO) Voltage
  - 178 mV Typical @ 250 mA for V_{OUT} = 2.8V
- 0.4% Typical Output Voltage Tolerance
- Standard Output Voltage Options:
  - 1.2V, 1.8V, 2.5V, 2.8V, 2.9V, 3.0V, 3.3V, 5.0V
- Stable with 1.0 µF Ceramic Output Capacitor
- Short Circuit Protection
- Overtemperature Protection

Applications

- Battery-Powered Devices
- Battery-Powered Alarm Circuits
- Smoke Detectors
- CO_2 Detectors
- Pagers and Cellular Phones
- Smart Battery Packs
- Low Quiescent Current Voltage Reference
- PDAs
- Digital Cameras
- Microcontroller Power

Related Literature

- AN765, *"Using Microchip's Micropower LDOs"* (DS00765), Microchip Technology Inc., 2002
- AN766, *"Pin-Compatible CMOS Upgrades to BiPolar LDOs"* (DS00766), Microchip Technology Inc., 2002
- AN792, *"A Method to Determine How Much Power a SOT23 Can Dissipate in an Application"* (DS00792), Microchip Technology Inc., 2001

General Description

The MCP1700 is a family of CMOS low dropout (LDO) voltage regulators that can deliver up to 250 mA of current while consuming only 1.6 µA of quiescent current (typical). The input operating range is specified from 2.3V to 6.0V, making it an ideal choice for two and three primary cell battery-powered applications, as well as single cell Li-Ion-powered applications.

The MCP1700 is capable of delivering 250 mA with only 178 mV of input to output voltage differential (V_{OUT} = 2.8V). The output voltage tolerance of the MCP1700 is typically ±0.4% at +25°C and ±3% maximum over the operating junction temperature range of -40°C to +125°C.

Output voltages available for the MCP1700 range from 1.2V to 5.0V. The LDO output is stable when using only 1 µF output capacitance. Ceramic, tantalum or aluminum electrolytic capacitors can all be used for input and output. Overcurrent limit and overtemperature shutdown provide a robust solution for any application.

Package options include SOT-23, SOT-89, TO-92 and 2x2 DFN-6.

Package Types

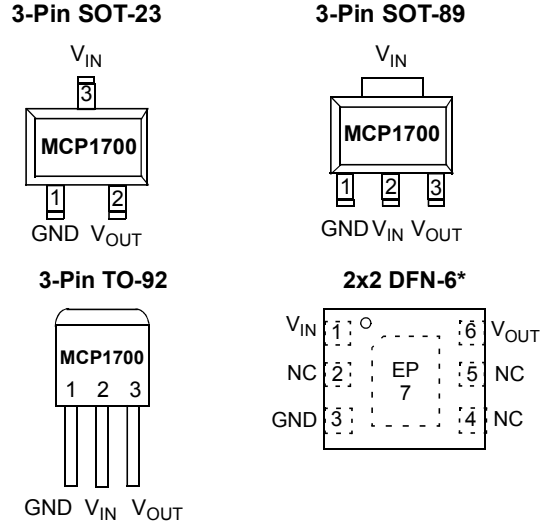

* Includes Exposed Thermal Pad (EP); see Table 3-1.

Functional Block Diagrams

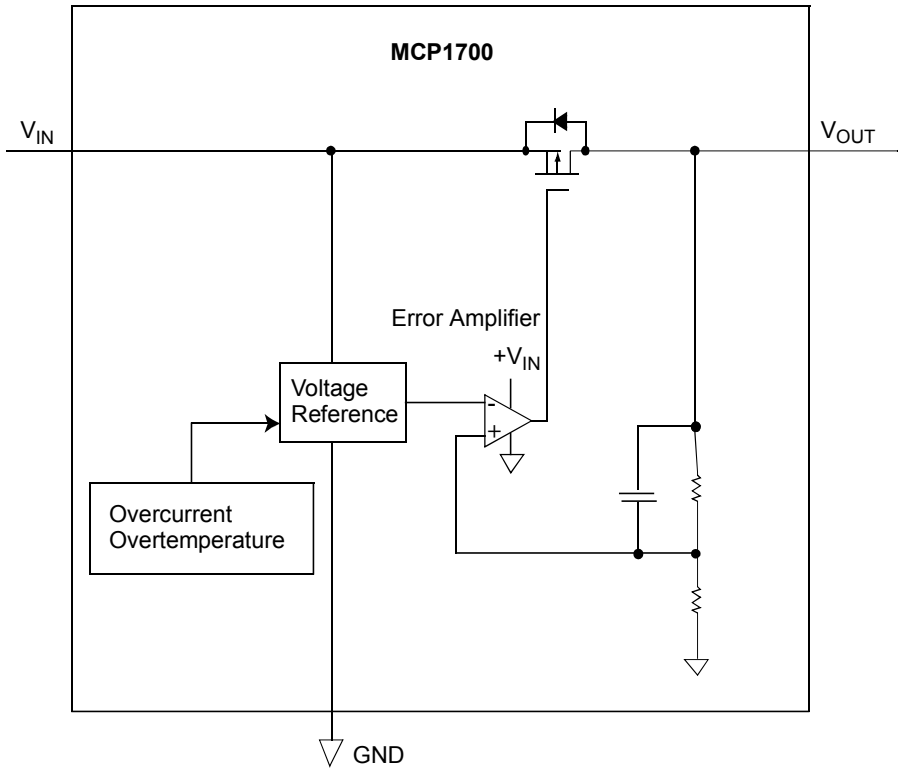

Typical Application Circuits

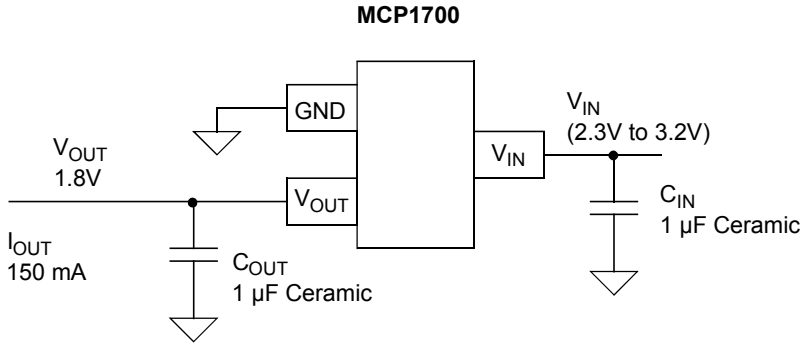

1.0 ELECTRICAL CHARACTERISTICS

Absolute Maximum Ratings †

V_{DD} ..... +6.5V
All inputs and outputs w.r.t. ..... (V_{SS} - 0.3V) to (V_{IN} + 0.3V)
Peak Output Current ..... Internally Limited
Storage Temperature ..... -65°C to +150°C
Maximum Junction Temperature ..... 150°C
Operating Junction Temperature ..... -40°C to +125°C
ESD protection on all pins (HBM;MM) ..... ≥ 4 kV; ≥ 400V

† Notice: Stresses above those listed under "Maximum Ratings" may cause permanent damage to the device. This is a stress rating only, and functional operation of the device at those or any other conditions above those indicated in the operational listings of this specification is not implied. Exposure to maximum rating conditions for extended periods may affect device reliability.

DC CHARACTERISTICS

Electrical Characteristics: Unless otherwise specified, all limits are established for $V_{IN} = V_R + 1V$, $I_{LOAD} = 100\ \mu A$, $C_{OUT} = 1\ \mu F$ (X7R), $C_{IN} = 1\ \mu F$ (X7R), $T_A = +25°C$.
Boldface type applies for junction temperatures, T_J (**Note 6**) of -40°C to +125°C.

Parameters	Sym.	Min.	Typ.	Max.	Units	Conditions
Input/Output Characteristics						
Input Operating Voltage	V_{IN}	**2.3**	—	**6.0**	V	**Note 1**
Input Quiescent Current	I_q	—	1.6	**4**	µA	I_L = 0 mA, $V_{IN} = V_R + 1V$
Maximum Output Current	I_{OUT_mA}	**250** **200**	— —	— —	mA	For $V_R \geq 2.5V$ For $V_R < 2.5V$
Output Short Circuit Current	I_{OUT_SC}	—	408	—	mA	$V_{IN} = V_R + 1V$, V_{OUT} = GND Current (peak current) measured 10 ms after short is applied.
Output Voltage Regulation	V_{OUT}	V_R - 2.0% **V_R - 3.0%**	V_R ± 0.4%	V_R + 2.0% **V_R + 3.0%**	V	**Note 2**
V_{OUT} Temperature Coefficient	TCV_{OUT}	—	50	—	ppm/°C	**Note 3**
Line Regulation	$\Delta V_{OUT}/(V_{OUT} X \Delta V_{IN})$	**-1.0**	±0.75	**+1.0**	%/V	$(V_R + 1)V \leq V_{IN} \leq 6V$
Load Regulation	$\Delta V_{OUT}/V_{OUT}$	**-1.5**	±1.0	**+1.5**	%	I_L = 0.1 mA to 250 mA for $V_R \geq 2.5V$ I_L = 0.1 mA to 200 mA for $V_R < 2.5V$ **Note 4**
Dropout Voltage $V_R > 2.5V$	$V_{IN} - V_{OUT}$	—	178	**350**	mV	I_L = 250 mA, (**Note 1**, **Note 5**)
Dropout Voltage $V_R < 2.5V$	$V_{IN} - V_{OUT}$	—	150	**350**	mV	I_L = 200 mA, (**Note 1**, **Note 5**)
Output Rise Time	T_R	—	500	—	µs	10% V_R to 90% V_R V_{IN} = 0V to 6V, $R_L = 50\Omega$ resistive

Note 1: The minimum V_{IN} must meet two conditions: $V_{IN} \geq 2.3V$ and $V_{IN} \geq (V_R + 3.0\%) + V_{DROPOUT}$.

2: V_R is the nominal regulator output voltage. For example: V_R = 1.2V, 1.5V, 1.8V, 2.5V, 2.8V, 2.9V, 3.0V, 3.3V, 4.0V, 5.0V. The input voltage $V_{IN} = V_R + 1.0V$; $I_{OUT} = 100\ \mu A$.

3: $TCV_{OUT} = (V_{OUT\text{-}HIGH} - V_{OUT\text{-}LOW}) * 10^6 / (V_R * \Delta Temperature)$, $V_{OUT\text{-}HIGH}$ = highest voltage measured over the temperature range. $V_{OUT\text{-}LOW}$ = lowest voltage measured over the temperature range.

4: Load regulation is measured at a constant junction temperature using low duty cycle pulse testing. Changes in output voltage due to heating effects are determined using thermal regulation specification TCV_{OUT}.

5: Dropout voltage is defined as the input to output differential at which the output voltage drops 2% below its measured value with a V_R + 1V differential applied.

6: The maximum allowable power dissipation is a function of ambient temperature, the maximum allowable junction temperature and the thermal resistance from junction to air (i.e. T_A, T_J, θ_{JA}). Exceeding the maximum allowable power dissipation will cause the device operating junction temperature to exceed the maximum 150°C rating. Sustained junction temperatures above 150°C can impact the device reliability.

7: The junction temperature is approximated by soaking the device under test at an ambient temperature equal to the desired Junction temperature. The test time is small enough such that the rise in the Junction temperature over the ambient temperature is not significant.

© 2005-2018 Microchip Technology Inc.

DC CHARACTERISTICS (CONTINUED)

Electrical Characteristics: Unless otherwise specified, all limits are established for $V_{IN} = V_R + 1V$, $I_{LOAD} = 100\ \mu A$, $C_{OUT} = 1\ \mu F$ (X7R), $C_{IN} = 1\ \mu F$ (X7R), $T_A = +25°C$.
Boldface type applies for junction temperatures, T_J **(Note 6)** of -40°C to +125°C.

Parameters	Sym.	Min.	Typ.	Max.	Units	Conditions
Output Noise	e_N	—	3	—	$\mu V/(Hz)^{1/2}$	$I_L = 100$ mA, f = 1 kHz, $C_{OUT} = 1\ \mu F$
Power Supply Ripple Rejection Ratio	PSRR	—	44	—	dB	f = 100 Hz, $C_{OUT} = 1\ \mu F$, $I_L = 50$ mA, $V_{INAC} = 100$ mV pk-pk, $C_{IN} = 0\ \mu F$, $V_R = 1.2V$
Thermal Shutdown Protection	T_{SD}	—	140	—	°C	$V_{IN} = V_R + 1V$, $I_L = 100\ \mu A$

Note 1: The minimum V_{IN} must meet two conditions: $V_{IN} \geq 2.3V$ and $V_{IN} \geq (V_R + 3.0\%) + V_{DROPOUT}$.

2: V_R is the nominal regulator output voltage. For example: $V_R = 1.2V, 1.5V, 1.8V, 2.5V, 2.8V, 2.9V, 3.0V, 3.3V, 4.0V, 5.0V$. The input voltage $V_{IN} = V_R + 1.0V$; $I_{OUT} = 100\ \mu A$.

3: $TCV_{OUT} = (V_{OUT-HIGH} - V_{OUT-LOW}) * 10^6 / (V_R * \Delta Temperature)$, $V_{OUT-HIGH}$ = highest voltage measured over the temperature range. $V_{OUT-LOW}$ = lowest voltage measured over the temperature range.

4: Load regulation is measured at a constant junction temperature using low duty cycle pulse testing. Changes in output voltage due to heating effects are determined using thermal regulation specification TCV_{OUT}.

5: Dropout voltage is defined as the input to output differential at which the output voltage drops 2% below its measured value with a $V_R + 1V$ differential applied.

6: The maximum allowable power dissipation is a function of ambient temperature, the maximum allowable junction temperature and the thermal resistance from junction to air (i.e. T_A, T_J, θ_{JA}). Exceeding the maximum allowable power dissipation will cause the device operating junction temperature to exceed the maximum 150°C rating. Sustained junction temperatures above 150°C can impact the device reliability.

7: The junction temperature is approximated by soaking the device under test at an ambient temperature equal to the desired Junction temperature. The test time is small enough such that the rise in the Junction temperature over the ambient temperature is not significant.

TEMPERATURE SPECIFICATIONS

Electrical Characteristics: Unless otherwise specified, all limits are established for $V_{IN} = V_R + 1V$, $I_{LOAD} = 100\ \mu A$, $C_{OUT} = 1\ \mu F$ (X7R), $C_{IN} = 1\ \mu F$ (X7R), $T_A = +25°C$.
Boldface type applies for junction temperatures, T_J **(Note 1)** of -40°C to +125°C.

Parameters	Sym.	Min.	Typ.	Max.	Units	Conditions
Temperature Ranges						
Specified Temperature Range	T_A	-40		+125	°C	
Operating Temperature Range	T_J	-40		+125	°C	
Storage Temperature Range	T_A	-65		+150	°C	
Thermal Package Resistance						
Thermal Resistance, 2x2 DFN	θ_{JA}	—	91	—	°C/W	EIA/JEDEC® JESD51-7 FR-4 4-Layer Board
	$\theta_{JC(Top)}$	—	286	—	°C/W	
	$\theta_{JC(Bottom)}$	—	28.57	—	°C/W	
	Ψ_{JT}	—	8.95	—	°C/W	
Thermal Resistance, SOT-23	θ_{JA}	—	212	—	°C/W	EIA/JEDEC JESD51-7 FR-4 4-Layer Board
	$\theta_{JC(Top)}$	—	139	—	°C/W	
	$\theta_{JC(Bottom)}$	—	11.95	—	°C/W	
	Ψ_{JT}	—	6.15	—	°C/W	
Thermal Resistance, SOT-89	θ_{JA}	—	104	—	°C/W	EIA/JEDEC JESD51-7 FR-4 4-Layer Board
	$\theta_{JC(Top)}$	—	74	—	°C/W	
	Ψ_{JT}	—	30	—	°C/W	

Note 1: The maximum allowable power dissipation is a function of ambient temperature, the maximum allowable junction temperature and the thermal resistance from junction to air (i.e. T_A, T_J, θ_{JA}). Exceeding the maximum allowable power dissipation will cause the device operating junction temperature to exceed the maximum 150°C rating. Sustained junction temperatures above 150°C can impact the device reliability.

© 2005-2018 Microchip Technology Inc.

TEMPERATURE SPECIFICATIONS (CONTINUED)

Electrical Characteristics: Unless otherwise specified, all limits are established for $V_{IN} = V_R + 1V$, $I_{LOAD} = 100\ \mu A$, $C_{OUT} = 1\ \mu F$ (X7R), $C_{IN} = 1\ \mu F$ (X7R), $T_A = +25°C$.
Boldface type applies for junction temperatures, T_J **(Note 1)** of -40°C to +125°C.

Parameters	Sym.	Min.	Typ.	Max.	Units	Conditions
Thermal Resistance, TO-92	θ_{JA}	—	92	—	°C/W	EIA/JEDEC JESD51-7 FR-4 4-Layer Board
	$\theta_{JC(Top)}$	—	74	—	°C/W	

Note 1: The maximum allowable power dissipation is a function of ambient temperature, the maximum allowable junction temperature and the thermal resistance from junction to air (i.e. T_A, T_J, θ_{JA}). Exceeding the maximum allowable power dissipation will cause the device operating junction temperature to exceed the maximum 150°C rating. Sustained junction temperatures above 150°C can impact the device reliability.

© 2005-2018 Microchip Technology Inc.

2.0 TYPICAL PERFORMANCE CURVES

Note: The graphs and tables provided following this note are a statistical summary based on a limited number of samples and are provided for informational purposes only. The performance characteristics listed herein are not tested or guaranteed. In some graphs or tables, the data presented may be outside the specified operating range (e.g., outside specified power supply range) and therefore outside the warranted range.

Note: Unless otherwise indicated: V_R = 1.8V, C_{OUT} = 1 µF Ceramic (X7R), C_{IN} = 1 µF Ceramic (X7R), I_L = 100 µA, T_A = +25°C, V_{IN} = V_R + 1V.

Note: Junction Temperature (T_J) is approximated by soaking the device under test to an ambient temperature equal to the desired junction temperature. The test time is small enough such that the rise in Junction temperature over the Ambient temperature is not significant.

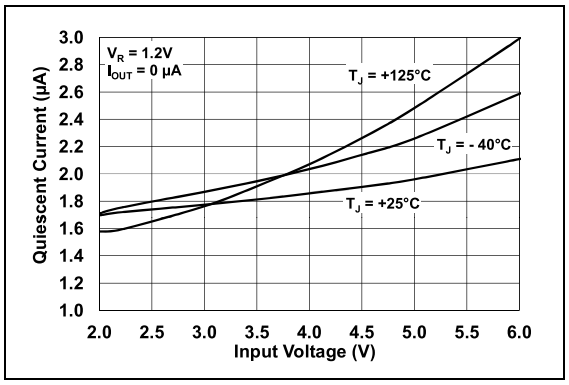

FIGURE 2-1: *Input Quiescent Current vs. Input Voltage.*

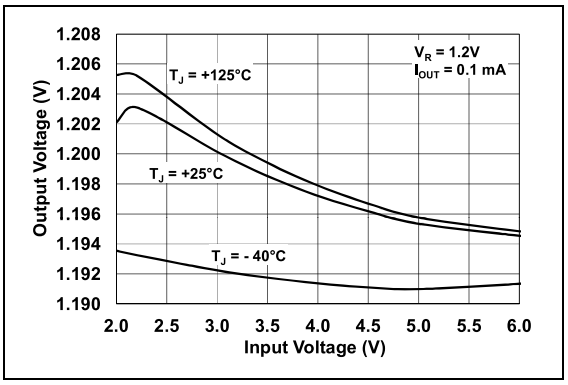

FIGURE 2-4: *Output Voltage vs. Input Voltage (V_R = 1.2V).*

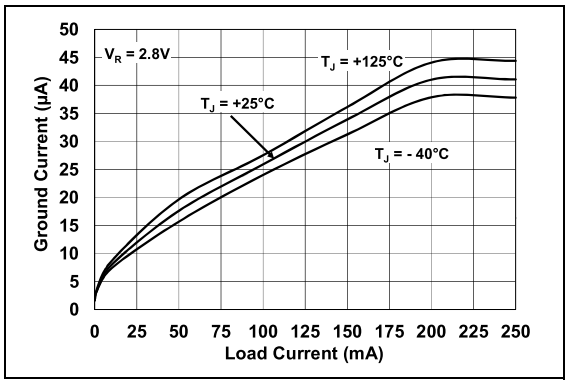

FIGURE 2-2: *Ground Current vs. Load Current.*

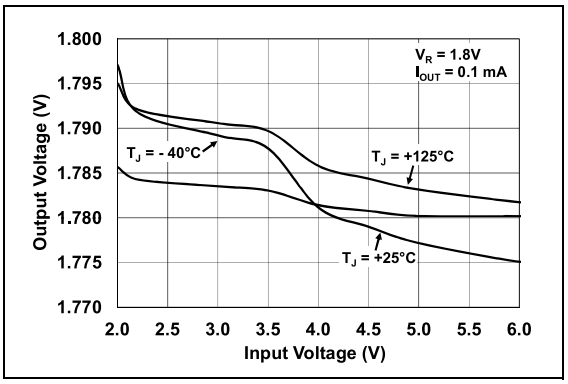

FIGURE 2-5: *Output Voltage vs. Input Voltage (V_R = 1.8V).*

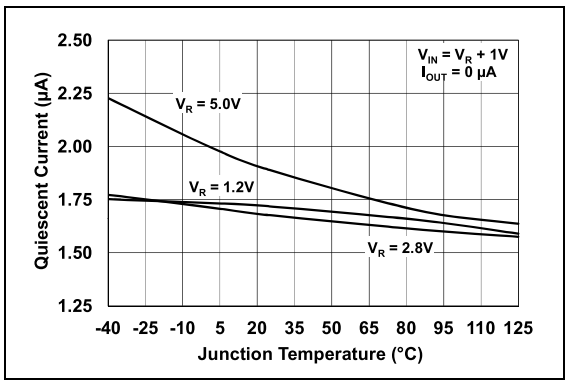

FIGURE 2-3: *Quiescent Current vs. Junction Temperature.*

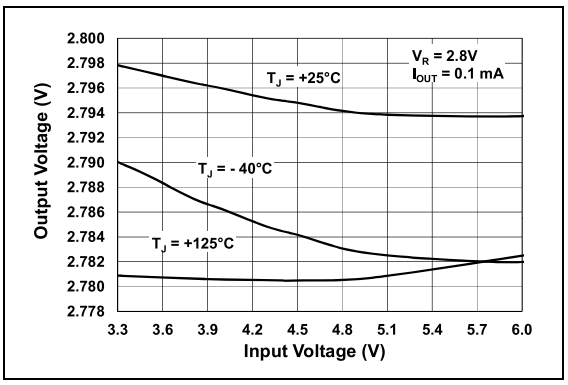

FIGURE 2-6: *Output Voltage vs. Input Voltage (V_R = 2.8V).*

Note: Unless otherwise indicated: V_R = 1.8V, C_{OUT} = 1 µF Ceramic (X7R), C_{IN} = 1 µF Ceramic (X7R), I_L = 100 µA, T_A = +25°C, V_{IN} = V_R + 1V.

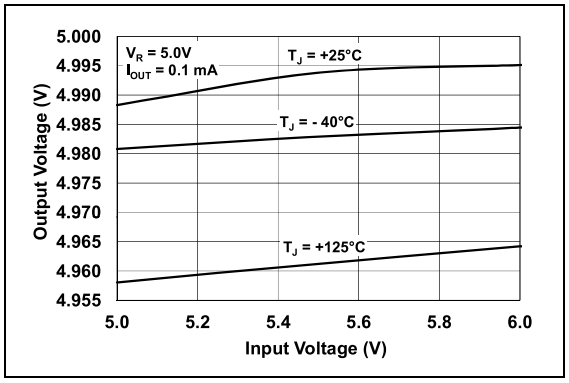

FIGURE 2-7: *Output Voltage vs. Input Voltage (V_R = 5.0V).*

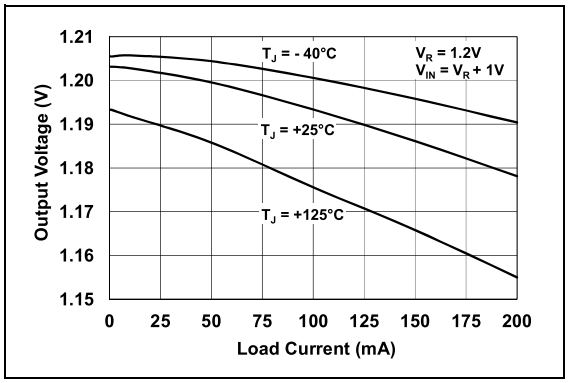

FIGURE 2-8: *Output Voltage vs. Load Current (V_R = 1.2V).*

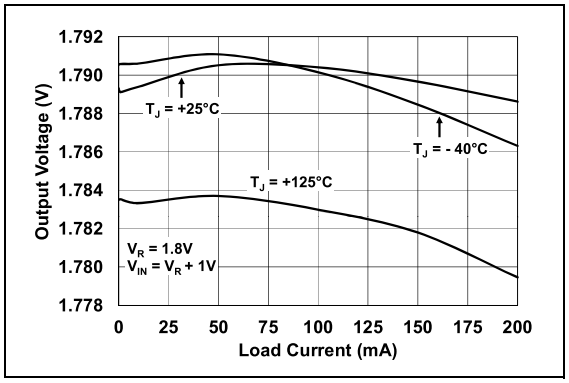

FIGURE 2-9: *Output Voltage vs. Load Current (V_R = 1.8V).*

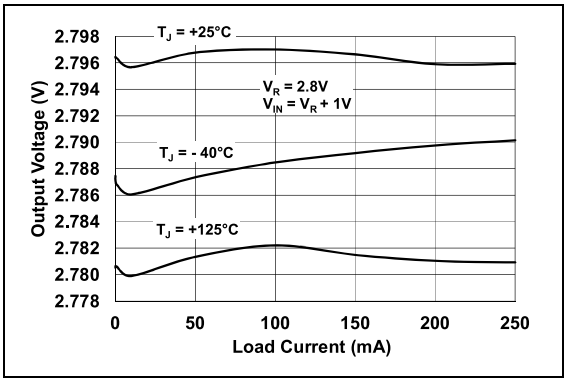

FIGURE 2-10: *Output Voltage vs. Load Current (V_R = 2.8V).*

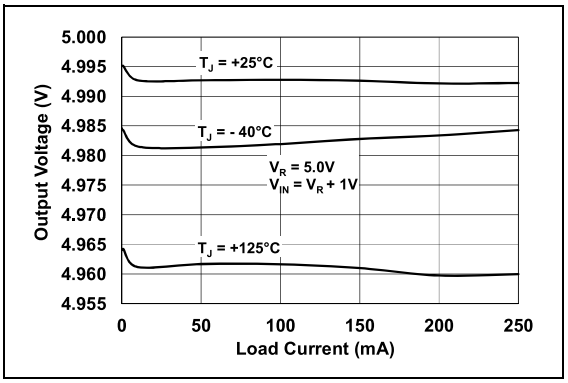

FIGURE 2-11: *Output Voltage vs. Load Current (V_R = 5.0V).*

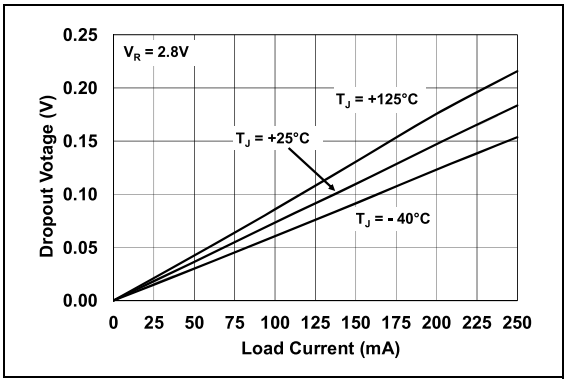

FIGURE 2-12: *Dropout Voltage vs. Load Current (V_R = 2.8V).*

Note: Unless otherwise indicated: V_R = 1.8V, C_{OUT} = 1 µF Ceramic (X7R), C_{IN} = 1 µF Ceramic (X7R), I_L = 100 µA, T_A = +25°C, V_{IN} = V_R + 1V.

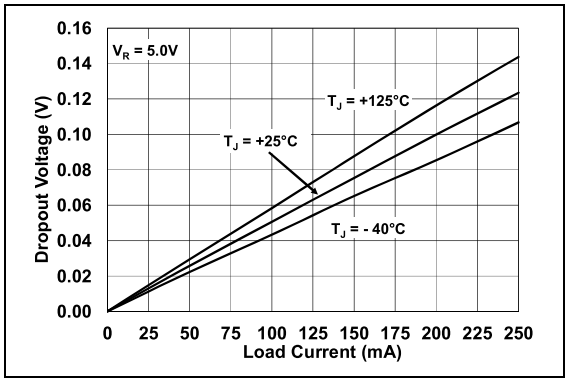

FIGURE 2-13: *Dropout Voltage vs. Load Current (V_R = 5.0V).*

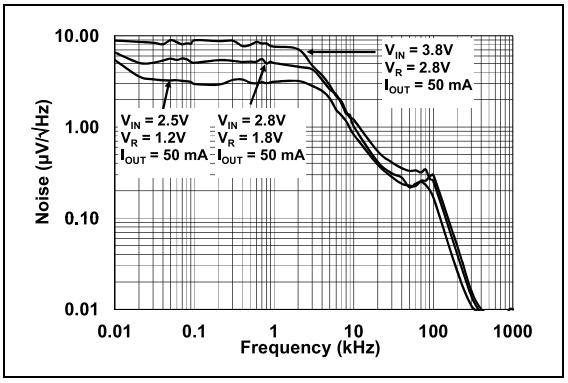

FIGURE 2-16: *Noise vs. Frequency.*

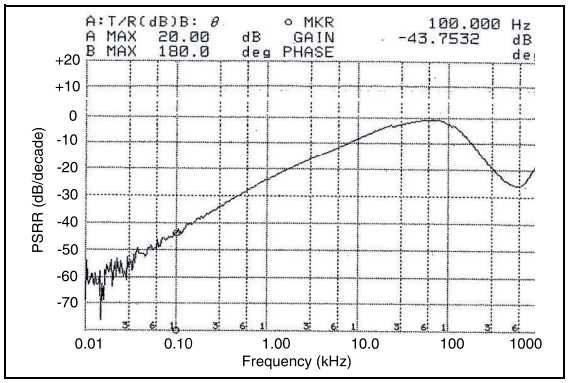

FIGURE 2-14: *Power Supply Ripple Rejection vs. Frequency (V_R = 1.2V).*

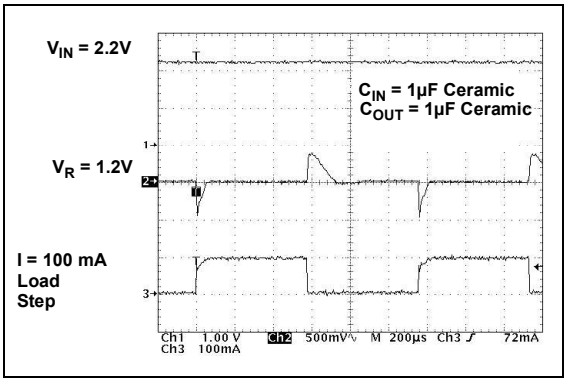

FIGURE 2-17: *Dynamic Load Step (V_R = 1.2V).*

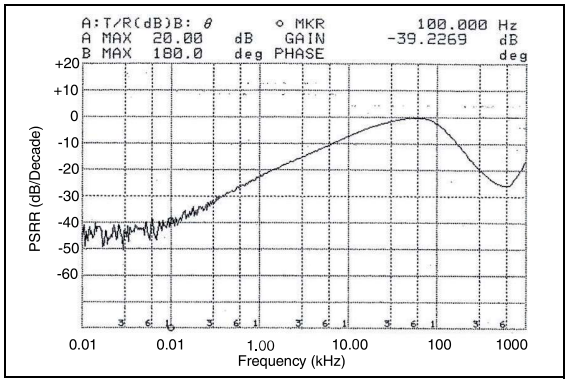

FIGURE 2-15: *Power Supply Ripple Rejection vs. Frequency (V_R = 2.8V).*

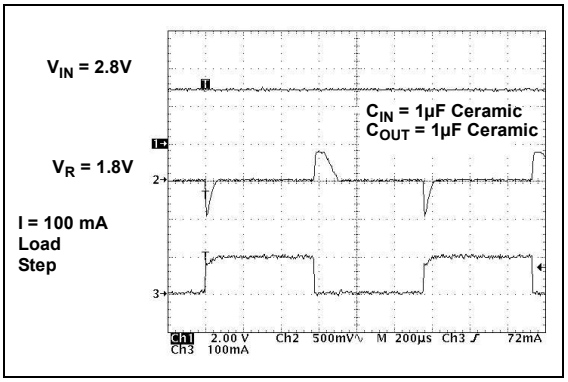

FIGURE 2-18: *Dynamic Load Step (V_R = 1.8V).*

Note: Unless otherwise indicated: V_R = 1.8V, C_{OUT} = 1 µF Ceramic (X7R), C_{IN} = µF Ceramic (X7R), I_L = 100 µA, T_A = +25°C, V_{IN} = V_R + 1V.

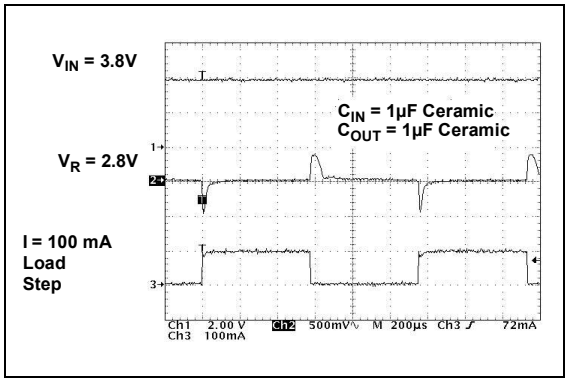

FIGURE 2-19: *Dynamic Load Step (V_R = 2.8V).*

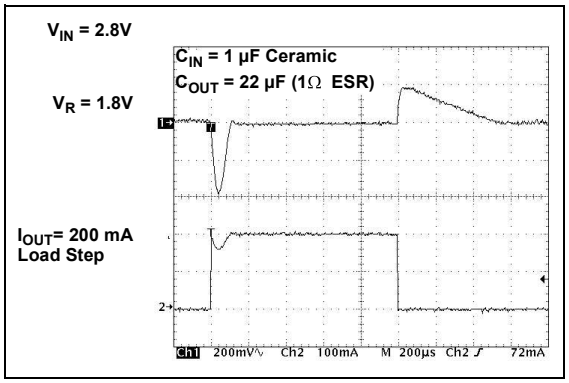

FIGURE 2-20: *Dynamic Load Step (V_R = 1.8V).*

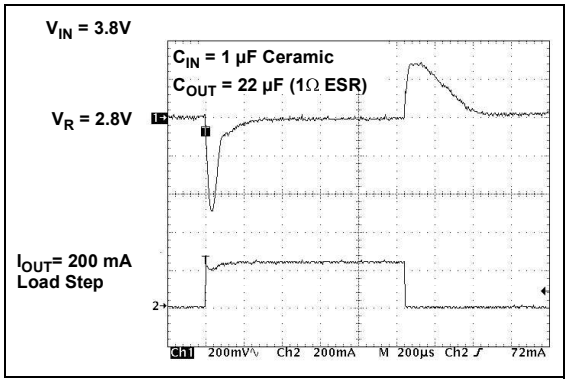

FIGURE 2-21: *Dynamic Load Step (V_R = 2.8V).*

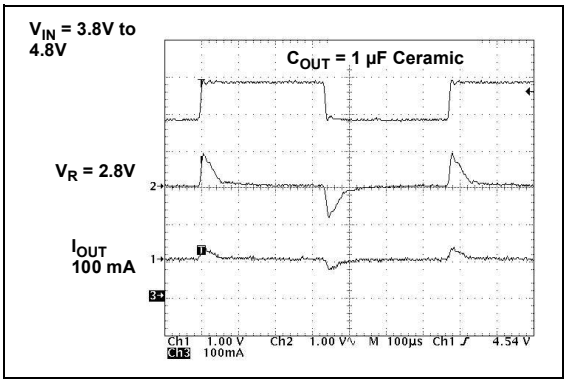

FIGURE 2-22: *Dynamic Load Step (V_R = 5.0V).*

FIGURE 2-23: *Dynamic Line Step (V_R = 2.8V).*

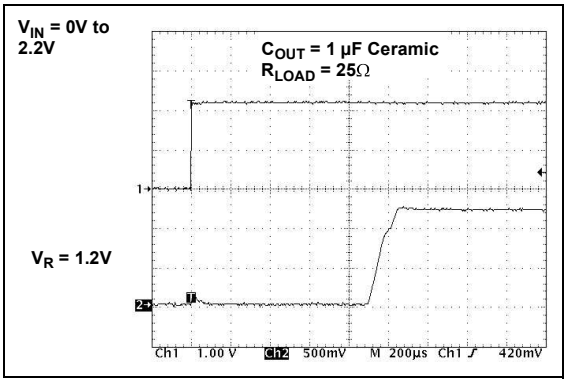

FIGURE 2-24: *Start-up from V_{IN} (V_R = 1.2V).*

Note: Unless otherwise indicated: V_R = 1.8V, C_{OUT} = 1 µF Ceramic (X7R), C_{IN} = 1 µF Ceramic (X7R), I_L = 100 µA, T_A = +25°C, V_{IN} = V_R + 1V.

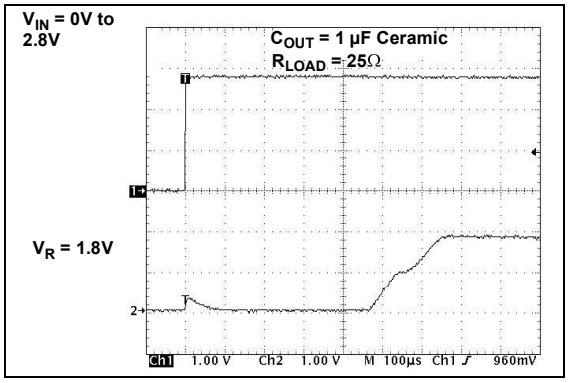

FIGURE 2-25: *Start-up from V_{IN} (V_R = 1.8V).*

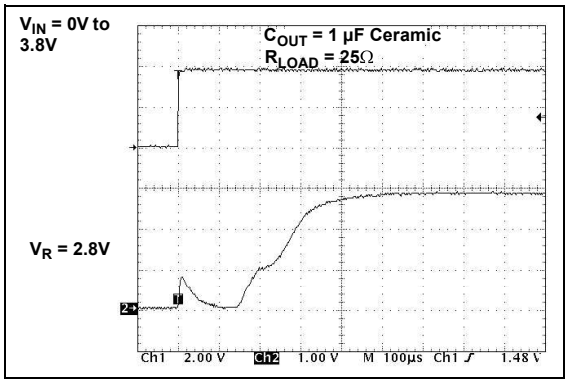

FIGURE 2-26: *Start-up from V_{IN} (V_R = 2.8V).*

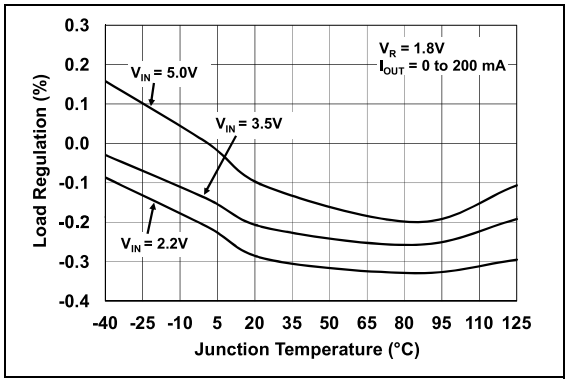

FIGURE 2-27: *Load Regulation vs. Junction Temperature (V_R = 1.8V).*

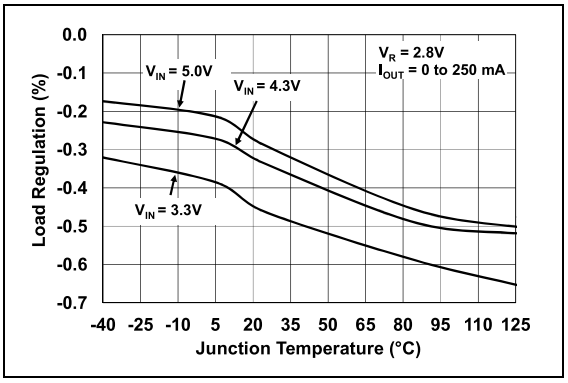

FIGURE 2-28: *Load Regulation vs. Junction Temperature (V_R = 2.8V).*

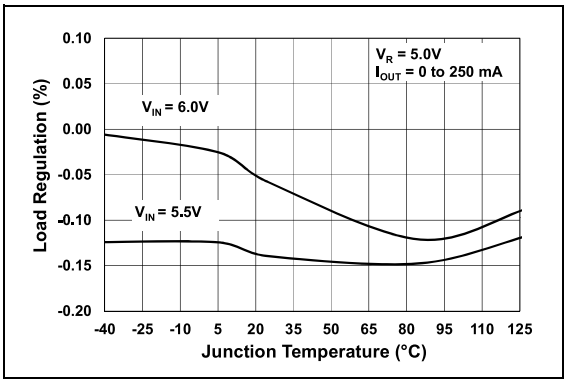

FIGURE 2-29: *Load Regulation vs. Junction Temperature (V_R = 5.0V).*

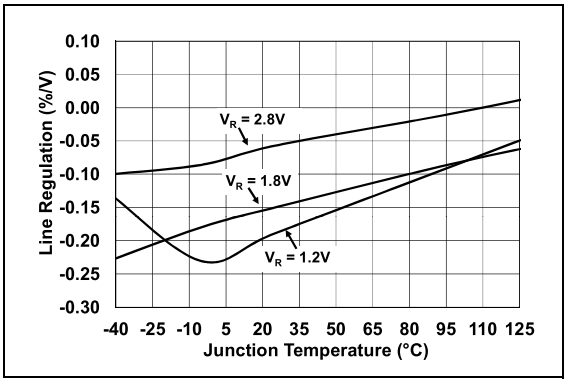

FIGURE 2-30: *Line Regulation vs. Temperature (V_R = 1.2V, 1.8V, 2.8V).*

3.0 PIN DESCRIPTIONS

The descriptions of the pins are listed in Table 3-1.

TABLE 3-1: PIN FUNCTION TABLE

Pin No. SOT-23	Pin No. SOT-89	Pin No. TO-92	Pin No. 2x2 DFN-6	Name	Function
1	1	1	3	GND	Ground Terminal
2	3	3	6	V_{OUT}	Regulated Voltage Output
3	2	2	1	V_{IN}	Unregulated Supply Voltage
—	—	—	2, 4, 5	NC	No Connect
—	—	—	7	EP	Exposed Thermal Pad

3.1 Ground Terminal (GND)

Regulator ground. Tie GND to the negative side of the output and the negative side of the input capacitor. Only the LDO bias current (1.6 µA typical) flows out of this pin; there is no high current. The LDO output regulation is referenced to this pin. Minimize voltage drops between this pin and the negative side of the load.

3.2 Regulated Output Voltage (V_{OUT})

Connect V_{OUT} to the positive side of the load and the positive terminal of the output capacitor. The positive side of the output capacitor should be physically located as close to the LDO V_{OUT} pin as is practical. The current flowing out of this pin is equal to the DC load current.

3.3 Unregulated Input Voltage Pin (V_{IN})

Connect V_{IN} to the input unregulated source voltage. As with all low dropout linear regulators, low source impedance is necessary for the stable operation of the LDO. The amount of capacitance required to ensure low source impedance will depend on the proximity of the input source capacitors or battery type. For most applications, 1 µF of capacitance will ensure stable operation of the LDO circuit. For applications that have load currents below 100 mA, the input capacitance requirement can be lowered. The type of capacitor used can be ceramic, tantalum or aluminum electrolytic. The low ESR characteristics of the ceramic will yield better noise and PSRR performance at high frequency.

3.4 No Connect (NC)

No internal connection. The pins marked NC are true “No Connect” pins.

3.5 Exposed Thermal Pad (EP)

There is an internal electrical connection between the Exposed Thermal Pad (EP) and the GND pin; they must be connected to the same potential on the Printed Circuit Board (PCB).

© 2005-2018 Microchip Technology Inc.

4.0 DETAILED DESCRIPTION

4.1 Output Regulation

A portion of the LDO output voltage is fed back to the internal error amplifier and compared with the precision internal bandgap reference. The error amplifier output will adjust the amount of current that flows through the P-Channel pass transistor, thus regulating the output voltage to the desired value. Any changes in input voltage or output current will cause the error amplifier to respond and adjust the output voltage to the target voltage (refer to Figure 4-1).

4.2 Overcurrent

The MCP1700 internal circuitry monitors the amount of current flowing through the P-Channel pass transistor. In the event of a short circuit or excessive output current, the MCP1700 will turn off the P-Channel device for a short period, after which the LDO will attempt to restart. If the excessive current remains, the cycle will repeat itself.

4.3 Overtemperature

The internal power dissipation within the LDO is a function of input-to-output voltage differential and load current. If the power dissipation within the LDO is excessive, the internal junction temperature will rise above the typical shutdown threshold of 140°C. At that point, the LDO will shut down and begin to cool to the typical turn-on junction temperature of 130°C. If the power dissipation is low enough, the device will continue to cool and operate normally. If the power dissipation remains high, the thermal shutdown protection circuitry will again turn off the LDO, protecting it from catastrophic failure.

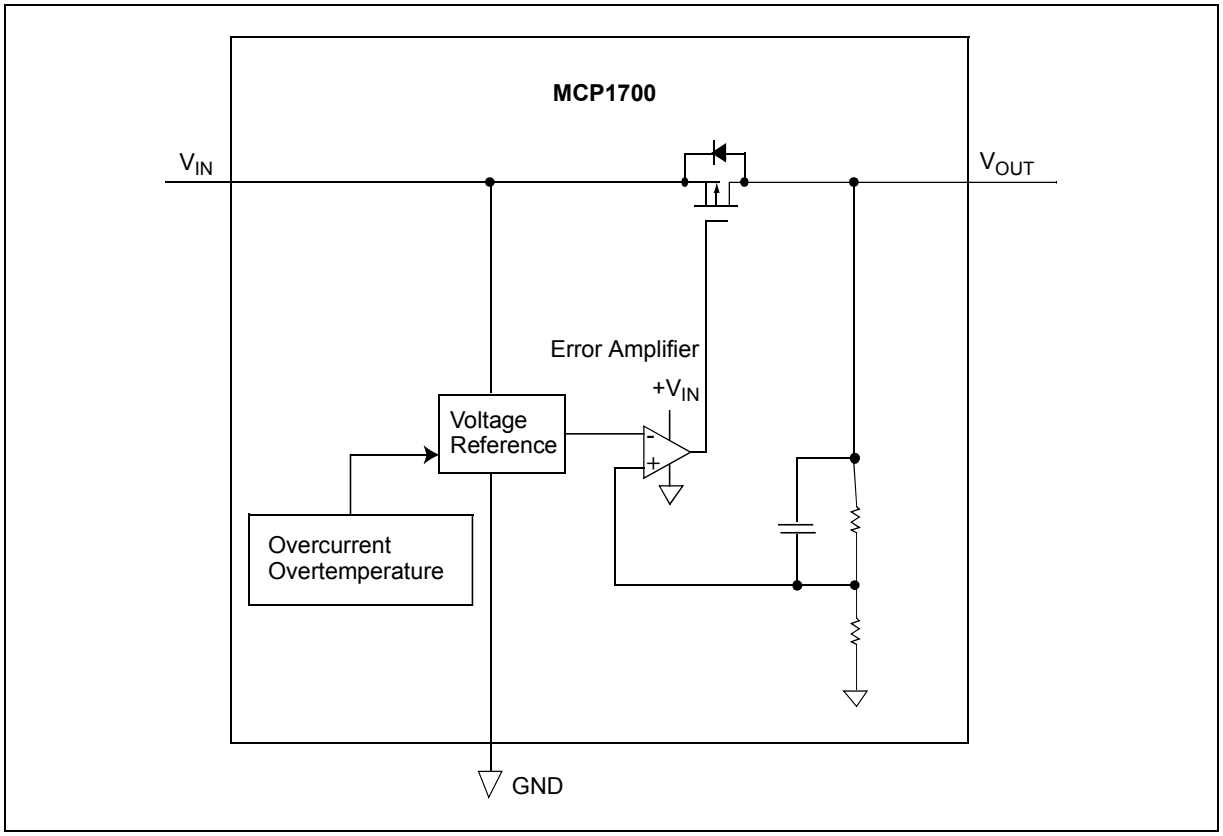

FIGURE 4-1: *Block Diagram.*

5.0 FUNCTIONAL DESCRIPTION

The MCP1700 CMOS low dropout linear regulator is intended for applications that need the lowest current consumption while maintaining output voltage regulation. The operating continuous load of the MCP1700 ranges from 0 mA to 250 mA ($V_R \geq 2.5V$). The input operating voltage ranges from 2.3V to 6.0V, making it capable of operating from two, three or four alkaline cells or a single Li-Ion cell battery input.

5.1 Input

The input of the MCP1700 is connected to the source of the P-Channel PMOS pass transistor. As with all LDO circuits, a relatively low source impedance (10Ω) is needed to prevent the input impedance from causing the LDO to become unstable. The size and type of the required capacitor depend heavily on the input source type (battery, power supply) and the output current range of the application. For most applications (up to 100 mA), a 1 µF ceramic capacitor will be sufficient to ensure circuit stability. Larger values can be used to improve circuit AC performance.

5.2 Output

The maximum rated continuous output current for the MCP1700 is 250 mA ($V_R \geq 2.5V$). For applications where $V_R < 2.5V$, the maximum output current is 200 mA.

A minimum output capacitance of 1.0 µF is required for small signal stability in applications that have up to 250 mA output current capability. The capacitor type can be ceramic, tantalum or aluminum electrolytic. The ESR range on the output capacitor can range from 0Ω to 2.0Ω.

5.3 Output Rise time

When powering up the internal reference output, the typical output rise time of 500 µs is controlled to prevent overshoot of the output voltage.

6.0 APPLICATION CIRCUITS AND ISSUES

6.1 Typical Application

The MCP1700 is most commonly used as a voltage regulator. Its low quiescent current and low dropout voltage make it ideal for many battery-powered applications.

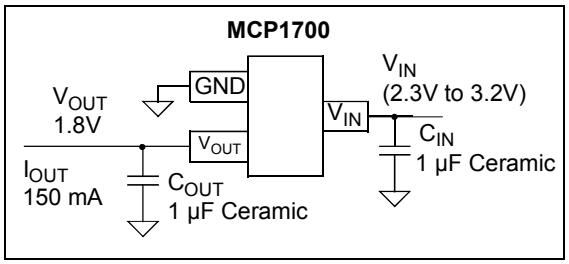

FIGURE 6-1: *Typical Application Circuit.*

6.1.1 APPLICATION INPUT CONDITIONS

Package Type = SOT-23
Input Voltage Range = 2.3V to 3.2V
V_{IN} maximum = 3.2V
V_{OUT} typical = 1.8V
I_{OUT} = 150 mA maximum

6.2 Power Calculations

6.2.1 POWER DISSIPATION

The internal power dissipation of the MCP1700 is a function of input voltage, output voltage and output current. The power dissipation resulting from the quiescent current draw is so low it is insignificant (1.6 µA x V_{IN}). The following equation can be used to calculate the internal power dissipation of the LDO.

EQUATION 6-1:

$$P_{LDO} = (V_{IN(MAX)} - V_{OUT(MIN)}) \times I_{OUT(MAX)}$$

P_{LDO} = Internal power dissipation of the LDO Pass device
$V_{IN(MAX)}$ = Maximum input voltage
$V_{OUT(MIN)}$ = Minimum output voltage of the LDO

The maximum continuous operating junction temperature specified for the MCP1700 is +125°C. To estimate the internal junction temperature of the MCP1700, the total internal power dissipation is multiplied by the thermal resistance from junction to ambient ($R\theta_{JA}$). The thermal resistance from junction to ambient for the SOT-23 pin package is estimated at 230°C/W.

EQUATION 6-2:

$$T_{J(MAX)} = P_{TOTAL} \times R\theta_{JA} + T_{A(MAX)}$$

$T_{J(MAX)}$ = Maximum continuous junction temperature
P_{TOTAL} = Total power dissipation of the device
$R\theta_{JA}$ = Thermal resistance from junction to ambient
$T_{A(MAX)}$ = Maximum ambient temperature

The maximum power dissipation capability for a package can be calculated given the junction-to-ambient thermal resistance and the maximum ambient temperature for the application. The following equation can be used to determine the maximum internal power dissipation of the package.

EQUATION 6-3:

$$P_{D(MAX)} = \frac{(T_{J(MAX)} - T_{A(MAX)})}{R\theta_{JA}}$$

$P_{D(MAX)}$ = Maximum power dissipation of the device
$T_{J(MAX)}$ = Maximum continuous junction temperature
$T_{A(MAX)}$ = Maximum ambient temperature
$R\theta_{JA}$ = Thermal resistance from junction to ambient

EQUATION 6-4:

$$T_{J(RISE)} = P_{D(MAX)} \times R\theta_{JA}$$

$T_{J(RISE)}$ = Rise in the device's junction temperature over the ambient temperature
P_{TOTAL} = Maximum power dissipation of the device
$R\theta_{JA}$ = Thermal resistance from junction to ambient

EQUATION 6-5:

$$T_J = T_{J(RISE)} + T_A$$

T_J = Junction Temperature

$T_{J(RISE)}$ = Rise in the device's junction temperature over the ambient temperature

T_A = Ambient temperature

6.3 Voltage Regulator

Internal power dissipation, junction temperature rise, junction temperature and maximum power dissipation are calculated in the following example. The power dissipation resulting from ground current is small enough to be neglected.

6.3.1 POWER DISSIPATION EXAMPLE

Package

Package Type = SOT-23

Input Voltage

V_{IN} = 2.3V to 3.2V

LDO Output Voltages and Currents

V_{OUT} = 1.8V

I_{OUT} = 150 mA

Maximum Ambient Temperature

$T_{A(MAX)}$ = +40°C

Internal Power Dissipation

Internal Power dissipation is the product of the LDO output current times the voltage across the LDO (V_{IN} to V_{OUT}).

$P_{LDO(MAX)} = (V_{IN(MAX)} - V_{OUT(MIN)}) \times I_{OUT(MAX)}$

P_{LDO} = (3.2V - (0.97 x 1.8V)) x 150 mA

P_{LDO} = 218.1 milliwatts

Device Junction Temperature Rise

The internal junction temperature rise is a function of internal power dissipation and the thermal resistance from junction to ambient for the application. The thermal resistance from junction to ambient ($R\theta_{JA}$) is derived from an EIA/JEDEC® standard for measuring thermal resistance for small surface mount packages. The EIA/JEDEC specification is JESD51-7, *"High Effective Thermal Conductivity Test Board for Leaded Surface Mount Packages"*. The standard describes the test method and board specifications for measuring the thermal resistance from junction to ambient. The actual thermal resistance for a particular application can vary depending on many factors, such as copper area and thickness. Refer to AN792, *"A Method to Determine How Much Power a SOT-23 Can Dissipate in an Application"* (DS00792), for more information regarding this subject.

$T_{J(RISE)} = P_{TOTAL} \times R\theta_{JA}$

$T_{J(RISE)}$ = 218.1 milliwatts x 212.0°C/Watt

$T_{J(RISE)}$ = 46.2°C

Junction Temperature Estimate

To estimate the internal junction temperature, the calculated temperature rise is added to the ambient or offset temperature. For this example, the worst-case junction temperature is estimated below.

$T_J = T_{J(RISE)} + T_{A(MAX)}$

T_J = 86.2°C

Maximum Package Power Dissipation at +40°C Ambient Temperature

2x2 DFN-6 (91°C/Watt = θ_{JA})

$P_{D(MAX)}$ = (125°C - 40°C) / 91°C/W

$P_{D(MAX)}$ = 934 milliwatts

SOT-23 (212.0°C/Watt = θ_{JA})

$P_{D(MAX)}$ = (125°C - 40°C) / 212°C/W

$P_{D(MAX)}$ = 401 milliwatts

SOT-89 (104°C/Watt = θ_{JA})

$P_{D(MAX)}$ = (125°C - 40°C) / 104°C/W

$P_{D(MAX)}$ = 817 milliwatts

TO-92 (92°C/Watt = θ_{JA})

$P_{D(MAX)}$ = (125°C - 40°C) / 92°C/W

$P_{D(MAX)}$ = 924 milliwatts

6.4 Voltage Reference

The MCP1700 can be used not only as a regulator, but also as a low quiescent current voltage reference. In many microcontroller applications, the initial accuracy of the reference can be calibrated using production test equipment or by using a ratio measurement. When the initial accuracy is calibrated, the thermal stability and line regulation tolerance are the only errors introduced by the MCP1700 LDO. The low cost, low quiescent current and small ceramic output capacitor are all advantages when using the MCP1700 as a voltage reference.

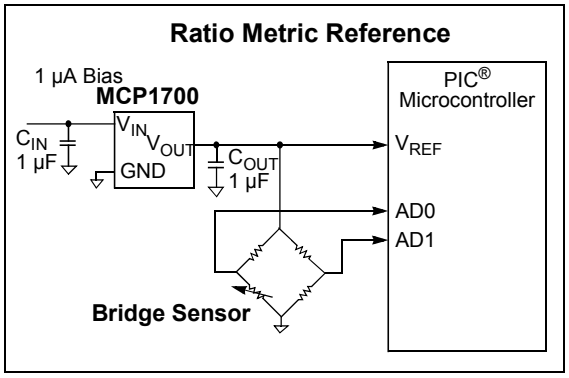

FIGURE 6-2: *Using the MCP1700 as a voltage reference.*

6.5 Pulsed Load Applications

For some applications, there are pulsed load current events that may exceed the specified 250 mA maximum specification of the MCP1700. The internal current limit of the MCP1700 will prevent high peak load demands from causing non-recoverable damage. The 250 mA rating is a maximum average continuous rating. As long as the average current does not exceed 250 mA, pulsed higher load currents can be applied to the MCP1700. The typical current limit for the MCP1700 is 550 mA (T_A + 25°C).

7.0 PACKAGING INFORMATION

7.1 Package Marking Information

3-Pin SOT-23

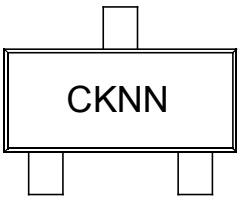

Standard	
Extended Temp	
Symbol	**Voltage ***
CK	1.2
CM	1.8
CP	2.5
CQ	2.8
GC	2.9
CR	3.0
CS	3.3
CU	5.0

* Custom output voltages available upon request.

Contact your local Microchip sales office for more information.

3-Pin SOT-89

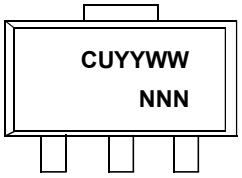

3-Pin TO-92

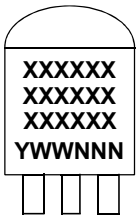

Example

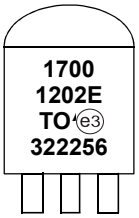

6-Lead DFN (2x2x0.9 mm)

Part Number	Code
MCP1700T-1202E/MAY	ABB
MCP1700T-1802E/MAY	ABC
MCP1700T-2502E/MAY	ABD
MCP1700T-2802E/MAY	ABF
MCP1700T-3002E/MAY	ABE
MCP1700T-3302E/MAY	AAZ
MCP1700T-5002E/MAY	ABA

Example

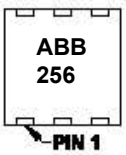

Legend:	XX...X	Customer-specific information
	Y	Year code (last digit of calendar year)
	YY	Year code (last 2 digits of calendar year)
	WW	Week code (week of January 1 is week ‘01’)
	NNN	Alphanumeric traceability code
	e3	Pb-free JEDEC® designator for Matte Tin (Sn)
	*	This package is Pb-free. The Pb-free JEDEC designator (e3) can be found on the outer packaging for this package.

Note: In the event the full Microchip part number cannot be marked on one line, it will be carried over to the next line, thus limiting the number of available characters for customer-specific information.

3-Lead Plastic Small Outline Transistor (TT) [SOT-23]

Note: For the most current package drawings, please see the Microchip Packaging Specification located at http://www.microchip.com/packaging

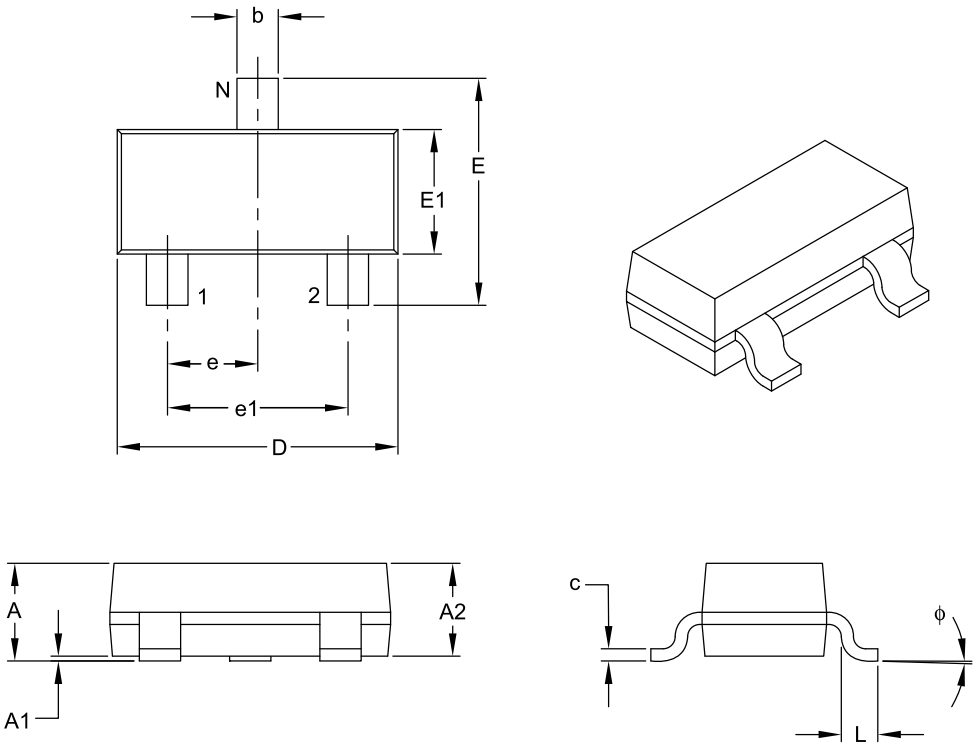

Units		MILLIMETERS		
Dimension Limits		MIN	NOM	MAX
Number of Pins	N	3		
Lead Pitch	e	0.95 BSC		
Outside Lead Pitch	e1	1.90 BSC		
Overall Height	A	0.89	–	1.12
Molded Package Thickness	A2	0.79	0.95	1.02
Standoff	A1	0.01	–	0.10
Overall Width	E	2.10	–	2.64
Molded Package Width	E1	1.16	1.30	1.40
Overall Length	D	2.67	2.90	3.05
Foot Length	L	0.13	0.50	0.60
Foot Angle	ϕ	0°	–	10°
Lead Thickness	c	0.08	–	0.20
Lead Width	b	0.30	–	0.54

Notes:

1. Dimensions D and E1 do not include mold flash or protrusions. Mold flash or protrusions shall not exceed 0.25 mm per side.
2. Dimensioning and tolerancing per ASME Y14.5M.

   BSC: Basic Dimension. Theoretically exact value shown without tolerances.

Microchip Technology Drawing C04-104B

3-Lead Plastic Small Outline Transistor (TT) [SOT-23]

Note: For the most current package drawings, please see the Microchip Packaging Specification located at http://www.microchip.com/packaging

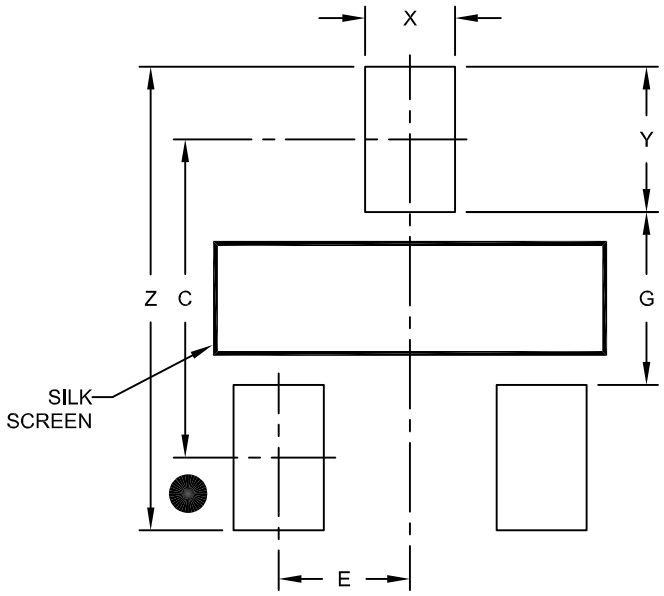

RECOMMENDED LAND PATTERN

Units		MILLIMETERS		
Dimension Limits		MIN	NOM	MAX
Contact Pitch	E	0.95 BSC		
Contact Pad Spacing	C		2.30	
Contact Pad Width (X3)	X			0.65
Contact Pad Length (X3)	Y			1.05
Distance Between Pads	G	1.25		
Overall Width	Z			3.35

Notes:

1. Dimensioning and tolerancing per ASME Y14.5M
   BSC: Basic Dimension. Theoretically exact value shown without tolerances.

Microchip Technology Drawing No. C04-2104A

3-Lead Plastic Small Outline Transistor (MB) - [SOT-89]

Note:	For the most current package drawings, please see the Microchip Packaging Specification located at http://www.microchip.com/packaging

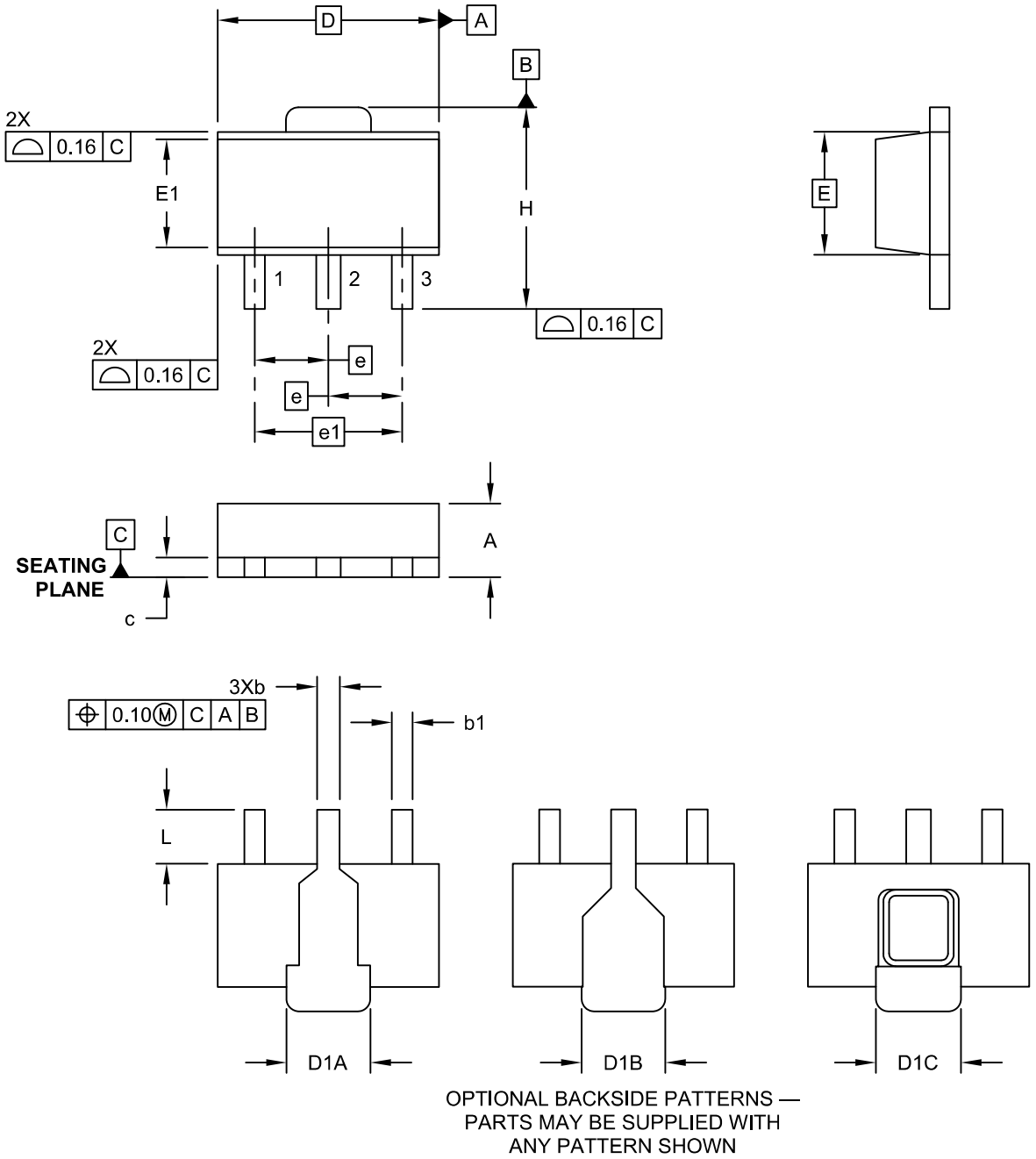

Microchip Technology Drawing C04-029C Sheet 1 of 2

3-Lead Plastic Small Outline Transistor (MB) - [SOT-89]

Note: For the most current package drawings, please see the Microchip Packaging Specification located at http://www.microchip.com/packaging

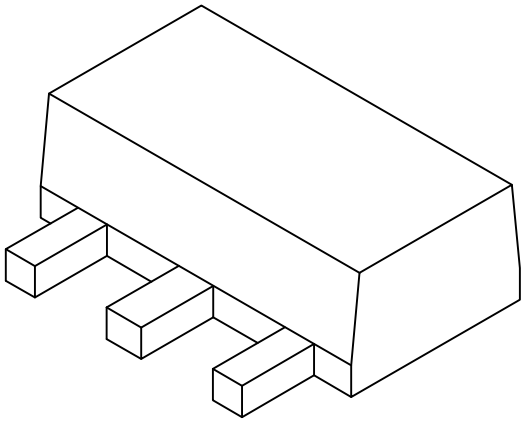

Units		MILLIMETERS		
Dimension Limits		MIN	NOM	MAX
Number of Leads	N		3	
Pitch	e		1.50 BSC	
Outside Lead Pitch	e1		3.00 BSC	
Overall Height	A	1.40	1.50	1.60
Overall Width	H	3.94	4.10	4.25
Molded Package Width at Base	E		2.50 BSC	
Molded Package Width at Top	E1	2.13	2.20	2.29
Overall Length	D		4.50 BSC	
Tab Length (Option A)	D1A	1.63	1.73	1.83
Tab Length (Option B)	D1B	1.40	1.60	1.75
Tab Length (Option C)	D1C	1.62	1.73	1.83
Foot Length	L	0.79	1.10	1.20
Lead Thickness	c	0.35	0.40	0.44
Lead 2 Width	b	0.41	0.50	0.56
Leads 1 & 3 Width	b1	0.36	0.42	0.48

Notes:

1. Dimensions D and E do not include mold flash or protrusions. Mold flash or protrusions shall not exceed 0.127mm per side.
2. Dimensioning and tolerancing per ASME Y14.5M
   BSC: Basic Dimension. Theoretically exact value shown without tolerances.

Microchip Technology Drawing C04-029C Sheet 2 of 2

3-Lead Plastic Small Outline Transistor (MB) - [SOT-89]

Note: For the most current package drawings, please see the Microchip Packaging Specification located at http://www.microchip.com/packaging

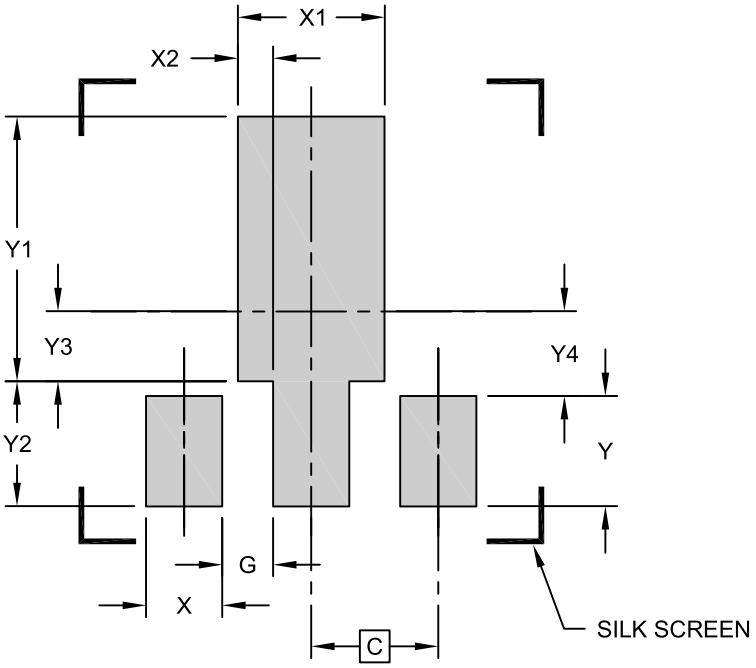

RECOMMENDED LAND PATTERN

Units	MILLIMETERS		
Dimension Limits	MIN	NOM	MAX
C		1.50 (BSC)	
X (3 PLACES)		0.900	
X1		1.733	
X2 (2 PLACES)		0.416	
G (2 PLACES)		0.600	
Y (2 PLACES)		1.300	
Y1		3.125	
Y2		1.475	
Y3		0.825	
Y4		1.000	

Notes:

1. Dimensioning and tolerancing per ASME Y14.5M
   BSC: Basic Dimension. Theoretically exact value shown without tolerances.

Microchip Technology Drawing C04-2029C

3-Lead Plastic Transistor Outline (TO) [TO-92]

Note:	For the most current package drawings, please see the Microchip Packaging Specification located at http://www.microchip.com/packaging

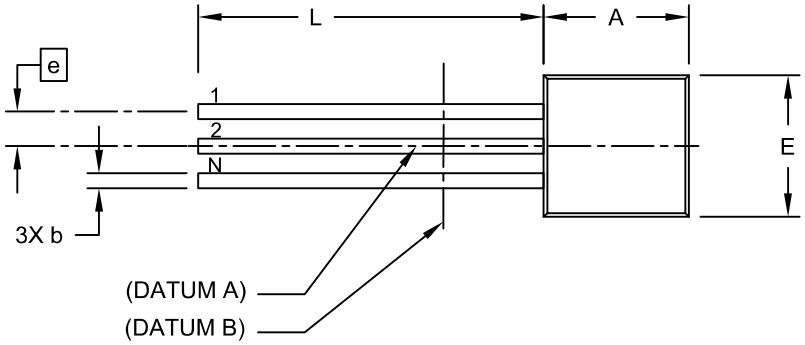

TOP VIEW

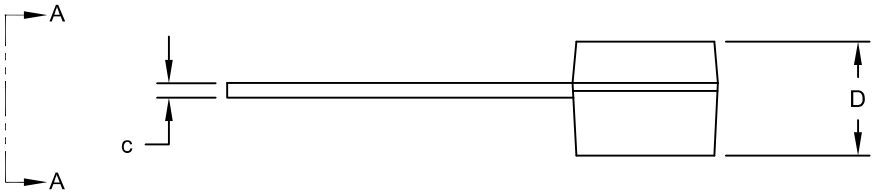

SIDE VIEW

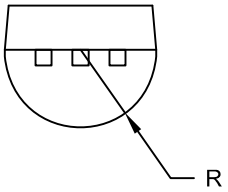

VIEW A-A

Microchip Technology Drawing C04-101 Rev C Sheet 1 of 2

3-Lead Plastic Transistor Outline (TO) [TO-92]

Note: For the most current package drawings, please see the Microchip Packaging Specification located at http://www.microchip.com/packaging

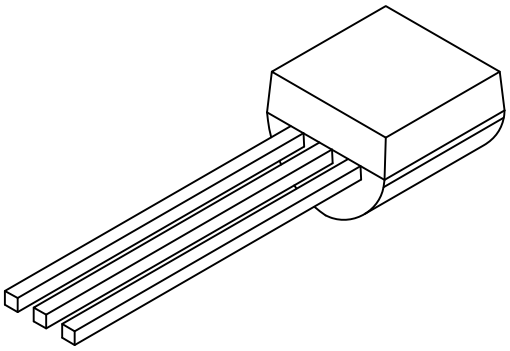

Units		INCHES		
Dimension Limits		MIN	NOM	MAX
Number of Pins	N	3		
Pitch	e	.050 BSC		
Bottom to Package Flat	D	.125	-	.165
Overall Width	E	.175	-	.205
Overall Length	A	.170	-	.210
Molded Package Radius	R	.080	-	.105
Tip to Seating Plane	L	.500	-	-
Lead Thickness	c	.014	-	.021
Lead Width	b	.014	-	.022

Notes:

1. Dimensions D and E do not include mold flash or protrusions. Mold flash or protrusions shall not exceed .005" per side.
2. Dimensioning and tolerancing per ASME Y14.5M

   BSC: Basic Dimension. Theoretically exact value shown without tolerances.

Microchip Technology Drawing C04-101 Rev C Sheet 2 of 2

6-Lead Plastic Dual Flat, No Lead Package (MA[Y]) - 2x2x0.9mm Body [DFN]

Note: For the most current package drawings, please see the Microchip Packaging Specification located at http://www.microchip.com/packaging

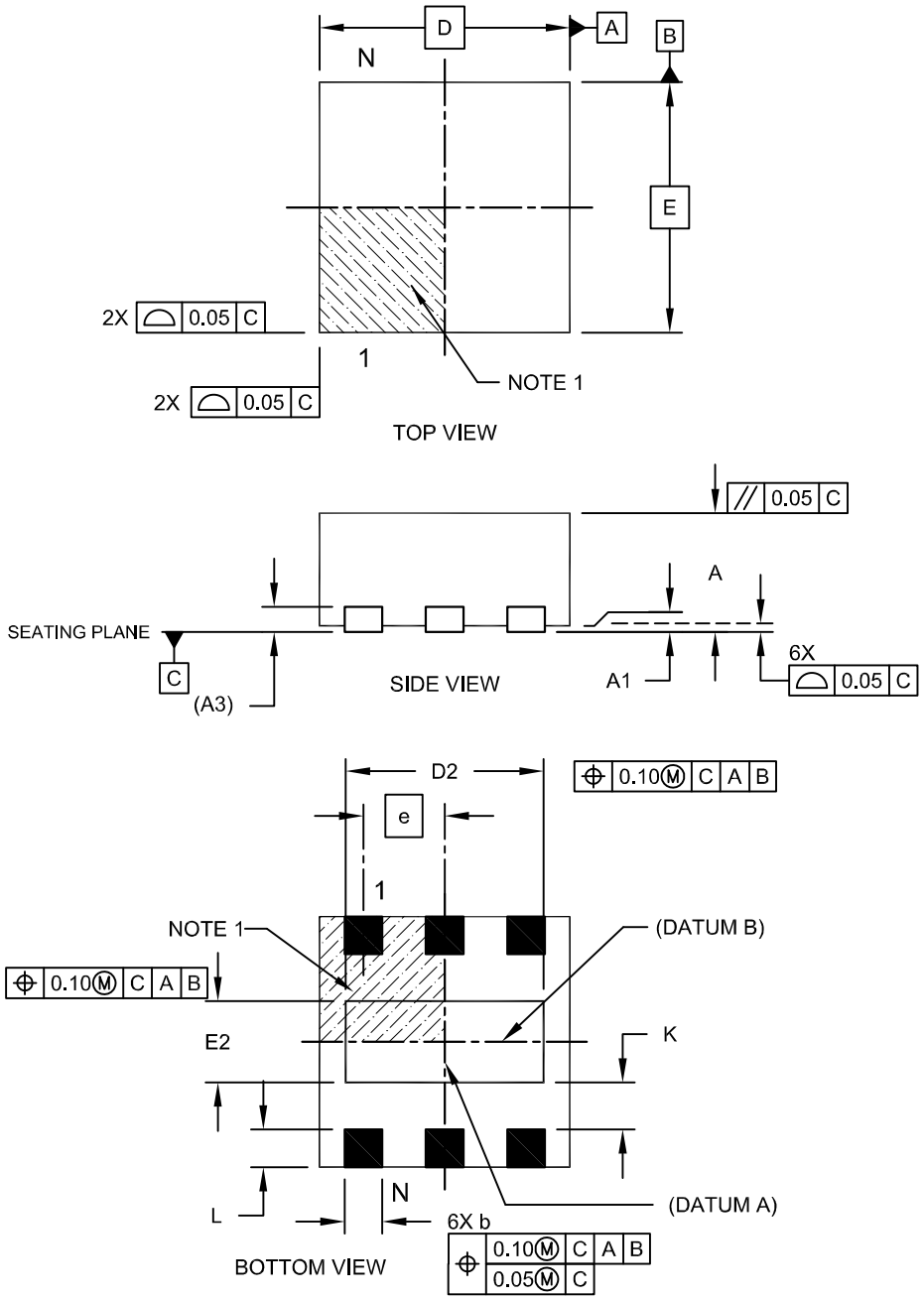

Microchip Technology Drawing C04-120C Sheet 1 of 2

6-Lead Plastic Dual Flat, No Lead Package (MA[Y]) - 2x2x0.9mm Body [DFN]

Note: For the most current package drawings, please see the Microchip Packaging Specification located at http://www.microchip.com/packaging

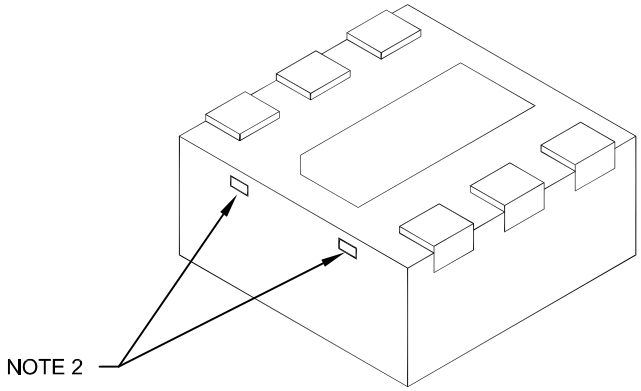

Units		MILLIMETERS		
Dimension Limits		MIN	NOM	MAX
Number of Pins	N	6		
Pitch	e	0.65 BSC		
Overall Height	A	0.80	0.85	0.90
Standoff	A1	0.00	0.02	0.05
Contact Thickness	A3	0.20 REF		
Overall Length	D	2.00 BSC		
Overall Width	E	2.00 BSC		
Exposed Pad Length	D2	1.50	1.60	1.70
Exposed Pad Width	E2	0.90	1.00	1.10
Contact Width	b	0.25	0.30	0.35
Contact Length	L	0.20	0.25	0.30
Contact-to-Exposed Pad	K	0.20	-	-

Notes:

1. Pin 1 visual index feature may vary, but must be located within the hatched area.
2. Package may have one or more exposed tie bars at ends.
3. Package is saw singulated.
4. Dimensioning and tolerancing per ASME Y14.5M.
   BSC: Basic Dimension. Theoretically exact value shown without tolerances.
   REF: Reference Dimension, usually without tolerance, for information purposes only.

Microchip Technology Drawing C04-120C Sheet 2 of 2

APPENDIX A: REVISION HISTORY

Revision E (November 2018)

The following is the list of modifications:

- Added information related to the 2.9V option throughout the document
- Updated Features.
- Updated DC Characteristics.
- Updated Temperature Specifications.
- Updated Power Dissipation example in **Section 6.3 "Voltage Regulator"**.
- Updated Package Marking Information in **Section 7.0 "Packaging Information"**.
- Updated Product Identification System.

Revision D (September 2016)

The following is the list of modifications:

- Updated DC Characteristics.
- Updated Product Identification System.
- Minor typographical changes.

Revision C (October 2013)

The following is the list of modifications:

- Added new package to the family (2x2 DFN-6) and related information throughout the document.
- Updated thermal package resistance information in Temperature Specifications.
- Updated **Section 3.0 "Pin Descriptions"**.
- Added package markings and drawings for the 2x2 DFN-6 package.
- Added information related to the 2.8V option throughout the document.
- Updated Product Identification System.
- Minor typographical changes.

Revision B (February 2007)

- Updated Packaging Information.
- Corrected Product Identification System.
- Changed X5R to X7R in Notes to DC Characteristics, Temperature Specifications, and **Section 2.0 "Typical Performance Curves"**.

Revision A (November 2005)

- Original release of this document.

PRODUCT IDENTIFICATION SYSTEM

To order or obtain information, e.g., on pricing or delivery, refer to the factory or the listed sales office.

PART NO.	X-	XXX	X	X	/XX
MCP1700	Tape & Reel	Voltage Output	Tolerance	Temp. Range	Package

Device:	MCP1700: Low Quiescent Current LDO	
Tape and Reel:	T:	Tape and Reel only applies to SOT-23 and SOT-89 devices
Standard Output Voltage: *	120 = 1.2V 180 = 1.8V 250 = 2.5V 280 = 2.8V 290 = 2.9V 300 = 3.0V 330 = 3.3V 500 = 5.0V * Custom output voltages available upon request. Contact your local Microchip sales office for more information	
Tolerance:	2 = 2% (Standard)	
Temperature Range:	E = -40°C to +125°C (Extended)	
Package:	MAY = Plastic Small Outline Transistor (DFN), 6-lead MB = Plastic Small Outline Transistor (SOT-89), 3-lead TO = Plastic Small Outline Transistor (TO-92), 3-lead TT = Plastic Small Outline Transistor (SOT-23), 3-lead	

Examples:

2x2 DFN-6 Package:

a) MCP1700T-1202E/MAY: 1.2V V_{OUT}
b) MCP1700T-1802E/MAY: 1.8V V_{OUT}
c) MCP1700T-2502E/MAY: 2.5V V_{OUT}
d) MCP1700T-2802E/MAY: 2.8V V_{OUT}
e) MCP1700T-3002E/MAY: 3.0V V_{OUT}
f) MCP1700T-3302E/MAY: 3.3V V_{OUT}
g) MCP1700T-5002E/MAY: 5.0V V_{OUT}

SOT-89 Package:

a) MCP1700T-1202E/MB: 1.2V V_{OUT}
b) MCP1700T-1802E/MB: 1.8V V_{OUT}
c) MCP1700T-2502E/MB: 2.5V V_{OUT}
d) MCP1700T-2802E/MB: 2.8V V_{OUT}
e) MCP1700T-3002E/MB: 3.0V V_{OUT}
f) MCP1700T-3302E/MB: 3.3V V_{OUT}
g) MCP1700T-5002E/MB: 5.0V V_{OUT}

TO-92 Package:

a) MCP1700-1202E/TO: 1.2V V_{OUT}
b) MCP1700-1802E/TO: 1.8V V_{OUT}
c) MCP1700-2502E/TO: 2.5V V_{OUT}
d) MCP1700-2802E/TO: 2.8V V_{OUT}
e) MCP1700-3002E/TO: 3.0V V_{OUT}
f) MCP1700-3302E/TO: 3.3V V_{OUT}
g) MCP1700-5002E/TO: 5.0V V_{OUT}

SOT-23 Package:

a) MCP1700T-1202E/TT: 1.2V V_{OUT}
b) MCP1700T-1802E/TT: 1.8V V_{OUT}
c) MCP1700T-2502E/TT: 2.5V V_{OUT}
d) MCP1700T-2802E/TT: 2.8V V_{OUT}
e) MCP1700T-2902E/TT: 2.9V V_{OUT}
f) MCP1700T-3002E/TT: 3.0V V_{OUT}
g) MCP1700T-3302E/TT: 3.3V V_{OUT}
h) MCP1700T-5002E/TT: 5.0V V_{OUT}

© 2005-2018 Microchip Technology Inc.

Note the following details of the code protection feature on Microchip devices:

- Microchip products meet the specification contained in their particular Microchip Data Sheet.
- Microchip believes that its family of products is one of the most secure families of its kind on the market today, when used in the intended manner and under normal conditions.
- There are dishonest and possibly illegal methods used to breach the code protection feature. All of these methods, to our knowledge, require using the Microchip products in a manner outside the operating specifications contained in Microchip's Data Sheets. Most likely, the person doing so is engaged in theft of intellectual property.
- Microchip is willing to work with the customer who is concerned about the integrity of their code.
- Neither Microchip nor any other semiconductor manufacturer can guarantee the security of their code. Code protection does not mean that we are guaranteeing the product as "unbreakable."

Code protection is constantly evolving. We at Microchip are committed to continuously improving the code protection features of our products. Attempts to break Microchip's code protection feature may be a violation of the Digital Millennium Copyright Act. If such acts allow unauthorized access to your software or other copyrighted work, you may have a right to sue for relief under that Act.

Information contained in this publication regarding device applications and the like is provided only for your convenience and may be superseded by updates. It is your responsibility to ensure that your application meets with your specifications. MICROCHIP MAKES NO REPRESENTATIONS OR WARRANTIES OF ANY KIND WHETHER EXPRESS OR IMPLIED, WRITTEN OR ORAL, STATUTORY OR OTHERWISE, RELATED TO THE INFORMATION, INCLUDING BUT NOT LIMITED TO ITS CONDITION, QUALITY, PERFORMANCE, MERCHANTABILITY OR FITNESS FOR PURPOSE**.** Microchip disclaims all liability arising from this information and its use. Use of Microchip devices in life support and/or safety applications is entirely at the buyer's risk, and the buyer agrees to defend, indemnify and hold harmless Microchip from any and all damages, claims, suits, or expenses resulting from such use. No licenses are conveyed, implicitly or otherwise, under any Microchip intellectual property rights unless otherwise stated.

Microchip received ISO/TS-16949:2009 certification for its worldwide headquarters, design and wafer fabrication facilities in Chandler and Tempe, Arizona; Gresham, Oregon and design centers in California and India. The Company's quality system processes and procedures are for its PIC® MCUs and dsPIC® DSCs, KEELOQ® code hopping devices, Serial EEPROMs, microperipherals, nonvolatile memory and analog products. In addition, Microchip's quality system for the design and manufacture of development systems is ISO 9001:2000 certified.

QUALITY MANAGEMENT SYSTEM
CERTIFIED BY DNV
═ ISO/TS 16949 ═

Trademarks

The Microchip name and logo, the Microchip logo, AnyRate, AVR, AVR logo, AVR Freaks, BitCloud, chipKIT, chipKIT logo, CryptoMemory, CryptoRF, dsPIC, FlashFlex, flexPWR, Heldo, JukeBlox, KeeLoq, Kleer, LANCheck, LINK MD, maXStylus, maXTouch, MediaLB, megaAVR, MOST, MOST logo, MPLAB, OptoLyzer, PIC, picoPower, PICSTART, PIC32 logo, Prochip Designer, QTouch, SAM-BA, SpyNIC, SST, SST Logo, SuperFlash, tinyAVR, UNI/O, and XMEGA are registered trademarks of Microchip Technology Incorporated in the U.S.A. and other countries.

ClockWorks, The Embedded Control Solutions Company, EtherSynch, Hyper Speed Control, HyperLight Load, IntelliMOS, mTouch, Precision Edge, and Quiet-Wire are registered trademarks of Microchip Technology Incorporated in the U.S.A.

Adjacent Key Suppression, AKS, Analog-for-the-Digital Age, Any Capacitor, AnyIn, AnyOut, BodyCom, CodeGuard, CryptoAuthentication, CryptoAutomotive, CryptoCompanion, CryptoController, dsPICDEM, dsPICDEM.net, Dynamic Average Matching, DAM, ECAN, EtherGREEN, In-Circuit Serial Programming, ICSP, INICnet, Inter-Chip Connectivity, JitterBlocker, KleerNet, KleerNet logo, memBrain, Mindi, MiWi, motorBench, MPASM, MPF, MPLAB Certified logo, MPLIB, MPLINK, MultiTRAK, NetDetach, Omniscient Code Generation, PICDEM, PICDEM.net, PICkit, PICtail, PowerSmart, PureSilicon, QMatrix, REAL ICE, Ripple Blocker, SAM-ICE, Serial Quad I/O, SMART-I.S., SQI, SuperSwitcher, SuperSwitcher II, Total Endurance, TSHARC, USBCheck, VariSense, ViewSpan, WiperLock, Wireless DNA, and ZENA are trademarks of Microchip Technology Incorporated in the U.S.A. and other countries.

SQTP is a service mark of Microchip Technology Incorporated in the U.S.A.

Silicon Storage Technology is a registered trademark of Microchip Technology Inc. in other countries.

GestIC is a registered trademark of Microchip Technology Germany II GmbH & Co. KG, a subsidiary of Microchip Technology Inc., in other countries.

All other trademarks mentioned herein are property of their respective companies.

© 2018, Microchip Technology Incorporated, All Rights Reserved.

ISBN: 978-1-5224-3876-2

Worldwide Sales and Service

AMERICAS

Corporate Office
2355 West Chandler Blvd.
Chandler, AZ 85224-6199
Tel: 480-792-7200
Fax: 480-792-7277
Technical Support:
http://www.microchip.com/support
Web Address:
www.microchip.com

Atlanta
Duluth, GA
Tel: 678-957-9614
Fax: 678-957-1455

Austin, TX
Tel: 512-257-3370

Boston
Westborough, MA
Tel: 774-760-0087
Fax: 774-760-0088

Chicago
Itasca, IL
Tel: 630-285-0071
Fax: 630-285-0075

Dallas
Addison, TX
Tel: 972-818-7423
Fax: 972-818-2924

Detroit
Novi, MI
Tel: 248-848-4000

Houston, TX
Tel: 281-894-5983

Indianapolis
Noblesville, IN
Tel: 317-773-8323
Fax: 317-773-5453
Tel: 317-536-2380

Los Angeles
Mission Viejo, CA
Tel: 949-462-9523
Fax: 949-462-9608
Tel: 951-273-7800

Raleigh, NC
Tel: 919-844-7510

New York, NY
Tel: 631-435-6000

San Jose, CA
Tel: 408-735-9110
Tel: 408-436-4270

Canada - Toronto
Tel: 905-695-1980
Fax: 905-695-2078

ASIA/PACIFIC

Australia - Sydney
Tel: 61-2-9868-6733

China - Beijing
Tel: 86-10-8569-7000

China - Chengdu
Tel: 86-28-8665-5511

China - Chongqing
Tel: 86-23-8980-9588

China - Dongguan
Tel: 86-769-8702-9880

China - Guangzhou
Tel: 86-20-8755-8029

China - Hangzhou
Tel: 86-571-8792-8115

China - Hong Kong SAR
Tel: 852-2943-5100

China - Nanjing
Tel: 86-25-8473-2460

China - Qingdao
Tel: 86-532-8502-7355

China - Shanghai
Tel: 86-21-3326-8000

China - Shenyang
Tel: 86-24-2334-2829

China - Shenzhen
Tel: 86-755-8864-2200

China - Suzhou
Tel: 86-186-6233-1526

China - Wuhan
Tel: 86-27-5980-5300

China - Xian
Tel: 86-29-8833-7252

China - Xiamen
Tel: 86-592-2388138

China - Zhuhai
Tel: 86-756-3210040

ASIA/PACIFIC

India - Bangalore
Tel: 91-80-3090-4444

India - New Delhi
Tel: 91-11-4160-8631

India - Pune
Tel: 91-20-4121-0141

Japan - Osaka
Tel: 81-6-6152-7160

Japan - Tokyo
Tel: 81-3-6880- 3770

Korea - Daegu
Tel: 82-53-744-4301

Korea - Seoul
Tel: 82-2-554-7200

Malaysia - Kuala Lumpur
Tel: 60-3-7651-7906

Malaysia - Penang
Tel: 60-4-227-8870

Philippines - Manila
Tel: 63-2-634-9065

Singapore
Tel: 65-6334-8870

Taiwan - Hsin Chu
Tel: 886-3-577-8366

Taiwan - Kaohsiung
Tel: 886-7-213-7830

Taiwan - Taipei
Tel: 886-2-2508-8600

Thailand - Bangkok
Tel: 66-2-694-1351

Vietnam - Ho Chi Minh
Tel: 84-28-5448-2100

EUROPE

Austria - Wels
Tel: 43-7242-2244-39
Fax: 43-7242-2244-393

Denmark - Copenhagen
Tel: 45-4450-2828
Fax: 45-4485-2829

Finland - Espoo
Tel: 358-9-4520-820

France - Paris
Tel: 33-1-69-53-63-20
Fax: 33-1-69-30-90-79

Germany - Garching
Tel: 49-8931-9700

Germany - Haan
Tel: 49-2129-3766400

Germany - Heilbronn
Tel: 49-7131-67-3636

Germany - Karlsruhe
Tel: 49-721-625370

Germany - Munich
Tel: 49-89-627-144-0
Fax: 49-89-627-144-44

Germany - Rosenheim
Tel: 49-8031-354-560

Israel - Ra'anana
Tel: 972-9-744-7705

Italy - Milan
Tel: 39-0331-742611
Fax: 39-0331-466781

Italy - Padova
Tel: 39-049-7625286

Netherlands - Drunen
Tel: 31-416-690399
Fax: 31-416-690340

Norway - Trondheim
Tel: 47-7288-4388

Poland - Warsaw
Tel: 48-22-3325737

Romania - Bucharest
Tel: 40-21-407-87-50

Spain - Madrid
Tel: 34-91-708-08-90
Fax: 34-91-708-08-91

Sweden - Gothenberg
Tel: 46-31-704-60-40

Sweden - Stockholm
Tel: 46-8-5090-4654

UK - Wokingham
Tel: 44-118-921-5800
Fax: 44-118-921-5820

© 2005-2018 Microchip Technology Inc.

User's Guide

SLAU772A–June 2018–Revised March 2020

MSP430G2553 LaunchPad™ Development Kit (MSP-EXP430G2ET)

The MSP430G2553 LaunchPad™ Development Kit is an inexpensive and easy-to-use evaluation module (EVM) for the MSP430G2xx entry-level series of microcontrollers (MCUs). It contains everything needed to start developing on the ultra-low-power MSP430™ microcontroller platform, including an onboard debug probe for programming, debugging and energy measurements. The board also features a push button and three LEDs for creating a simple user interface.

Figure 1 shows the MSP-EXP430G2ET LaunchPad development kit.

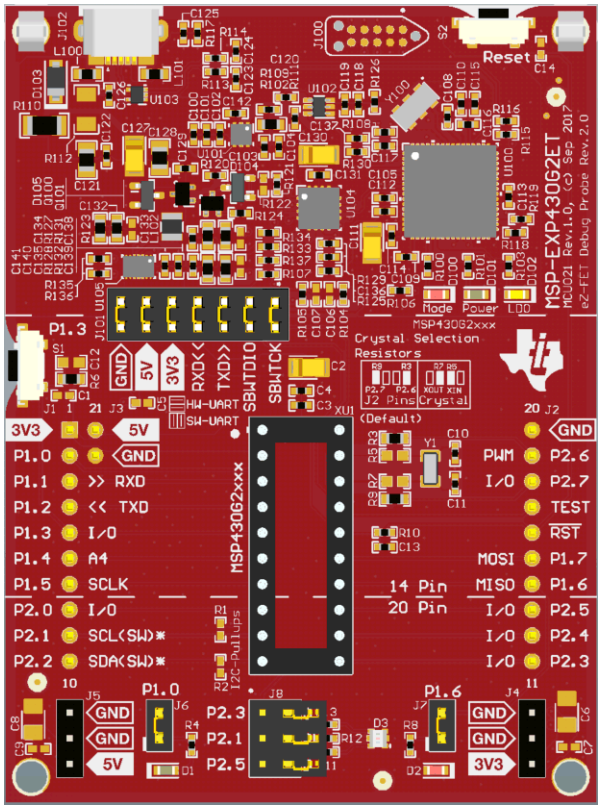

Figure 1. MSP-EXP430G2ET LaunchPad Development Kit

Copyright © 2018–2020, Texas Instruments Incorporated

Contents

1 Getting Started 4
1.1 Introduction 4
1.2 Key Features 4
1.3 What's Included 4
1.4 First Steps: Out-of-Box Experience 4
1.5 Next Steps: Looking Into the Provided Code 5
2 Hardware 6
2.1 Block Diagram 6
2.2 Hardware Features 7
2.3 Power 10
2.4 Measure MSP430 Current Draw 11
2.5 Clocking 11
2.6 Using the eZ-FET Debug Probe With a Different Target 11
2.7 BoosterPack Plug-in Module Pinout 12
2.8 20-Pin DIP Socket 13
2.9 Supported Devices 14
2.10 Design Files 15
2.11 Hardware Change log 15
3 Software Examples 15
3.1 Out-of-Box Software Example 16
3.2 Blink LED Example 17
4 Resources 17
4.1 Integrated Development Environments 17
4.2 LaunchPad Development Kit Websites 20
4.3 MSPWare and TI Resource Explorer 21
4.4 MSP430G2553 MCU 21
4.5 Community Resources 22
5 FAQ 23
6 Schematics 24

List of Figures

1 MSP-EXP430G2ET LaunchPad Development Kit 1
2 MSP-EXP430G2ET Overview 6
3 MSP-EXP430G2ET Block Diagram 6
4 MSP430G2553 20-Pin N Package (Top View) 7
5 eZ-FET Debug Probe 8
6 eZ-FET Isolation Jumper Block Diagram 9
7 Application Backchannel UART in Device Manager 10
8 MSP-EXP430G2ET Power Block Diagram 10
9 BoosterPack Checker Tool 13
10 Pinout of Connector From LaunchPad Development Kit to BoosterPack Plug-in Module 13
11 Insert Device Into Target Socket 14
12 TI Resource Explorer Cloud 18
13 CCS Cloud 18
14 Directing the Project>Import Function to the Demo Project 19
15 When CCS Has Found the Project 20
16 Using TI Resource Explorer to Browse MSP-EXP430G2ET in MSPWare 21
17 Schematics (1 of 3) 24
18 Schematics (2 of 3) 25
19 Schematics (3 of 3) 26

Copyright © 2018–2020, Texas Instruments Incorporated

List of Tables

1 EnergyTrace Technology 8
2 Isolation Block Connections 9
3 Supported Devices 14
4 Hardware Change Log 15
5 Software Examples 16
6 IDE Minimum Requirements for MSP-EXP430G2ET 16
7 Source File 16
8 Source File and Folders 17
9 How MSP Device Documentation is Organized 21

Trademarks

LaunchPad, MSP430, BoosterPack, Code Composer Studio, EnergyTrace, ControlSuite, TivaWare, E2E are trademarks of Texas Instruments.
IAR Embedded Workbench, C-SPY are registered trademarks of IAR Systems.
All other trademarks are the property of their respective owners.

Copyright © 2018–2020, Texas Instruments Incorporated

1 Getting Started

1.1 Introduction

The MSP430G2553 16-bit MCU has 16KB of flash, 512 bytes of RAM, up to 16-MHz CPU speed, an 8-channel 10-bit ADC, capacitive-touch enabled I/Os, a universal serial communication interface, and more – plenty to get started in your development.

Rapid prototyping is simplified by the 20-pin BoosterPack™ plug-in module headers that support a wide range of available BoosterPack plug-in modules. You can quickly add features like wireless connectivity, graphical displays, environmental sensing, and much more. You can either design your own BoosterPack plug-in module or choose among many already available from TI and third-party developers.

The LaunchPad development kit features an integrated DIP target socket that supports up to 20 pins, allowing MSP430 entry-level MCUs to be plugged into the LaunchPad development kit. The MSP-EXP430G2ET LaunchPad development kit comes with an MSP430G2553 MCU by default. The MSP430G2553 MCU has the most memory available of the compatible entry-level MCUs.

Free software development tools are also available, such as TI's Eclipse-based Code Composer Studio™ IDE (CCS) and IAR Embedded Workbench® for MSP430 IDE (IAR EW430). Both of these IDEs support EnergyTrace™ technology for real-time power profiling and debugging when paired with the MSP430G2553 LaunchPad development kit. More information about the LaunchPad development kit, including documentation and design files, can be found on the MSP430G2553 LaunchPad development kit tool page.

1.2 Key Features

- High-quality 20-pin DIP socket for an easy plug-in or removal of the target MCU
- Supports MSP430G2xx1, MSP430G2xx2, MSP430G2xx3, and MSP430F20xx MCUs in PDIP14 or PDIP20 packages (see Section 2.9 for a list of supported MCUs)
- EnergyTrace technology available for ultra-low-power debugging
- 20-pin LaunchPad development kit standard leveraging the BoosterPack plug-in module ecosystem
- Onboard eZ-FET debug probe
- 1 button and 3 LEDs for user interaction

1.3 What's Included

1.3.1 Kit Contents

- 1x MSP-EXP430G2ET LaunchPad development kit
- 1x micro USB-B cable
- 1x quick start guide

1.3.2 Software Examples

- Out-of-box software

1.4 First Steps: Out-of-Box Experience

An easy way to get started with the EVM is by using its preprogrammed out-of-box code. It demonstrates some key features of the EVM.

1.4.1 Connecting to the Computer

Connect the LaunchPad development kit to a computer using the included USB cable. The green power and yellow LDO LEDs should illuminate. For proper operation, drivers are needed. TI recommends installing the drivers by installing an IDE such as TI CCS or IAR EW430. Drivers are also available at http://www.ti.com/MSPdrivers.

Copyright © 2018–2020, Texas Instruments Incorporated

1.4.2 Running the Out-of-Box Experience

The LaunchPad development kit includes a pre-programmed MSP430G2553 MCU already installed in the target socket. When the LaunchPad development kit is connected through USB, the Out-of-Box Experience (OOBE) demo starts with a two LED toggle sequence.

Press button P1.3 to switch the application to the Live Temperature mode. The LaunchPad development kit should start streaming live temperature data to the PC to be visualized in the MSP-EXP430G2ET OOBE GUI or displayed in a serial terminal. A reference temperature is taken at the beginning of this mode, and the LEDs of the LaunchPad development kit signal a rise or fall in temperature by varying the brightness of the on-board red or green LED, respectively. The reference temperature can also be recalibrated to the ambient temperature with another button press on P1.3.

You can influence the temperature of the MCU by blowing hot or cold air onto it, and you can then see changes in the LED brightness or data changes on the GUI.

This GUI is created with GUI Composer 2.0 with the source available for customization, imported from the TI Cloud Gallery. The serial communication port on the PC must be configured with 9600 bps, one stop bit, and no flow control to display the values correctly.

NOTE: The OOB cloud GUI is supported in only the latest version of Chrome, Firefox, and Safari browsers. An installer for the offline standalone GUI can also be downloaded from the TI Cloud Gallery.

1.5 Next Steps: Looking Into the Provided Code

After the EVM features have been explored, the fun can begin. It is time to open an integrated development environment and start editing the code examples. See Section 4 for available IDEs and where to download them.

The quickest way to get started using the LaunchPad development kit is to use TI's Cloud Development Tools. The cloud-based Resource Explorer provides access to all of the examples and resources in MSPWare. Code Composer Studio Cloud is a simple cloud-based IDE that enables developing and running applications on the LaunchPad development kit.

The out-of-box source code and more code examples are provided and available on the download page. Code is licensed under BSD, and TI encourages reuse and modifications to fit specific needs.

Section 3 describes all functions in detail and provides a project structure to help familiarize you with the code.

With the onboard eZ-FET debug probe, debugging and downloading new code is simple. A USB connection between the EVM and a PC through the provided USB cable is all that is needed.

Copyright © 2018–2020, Texas Instruments Incorporated

2 Hardware

Figure 2 shows an overview of the MSP-EXP430G2ET hardware.

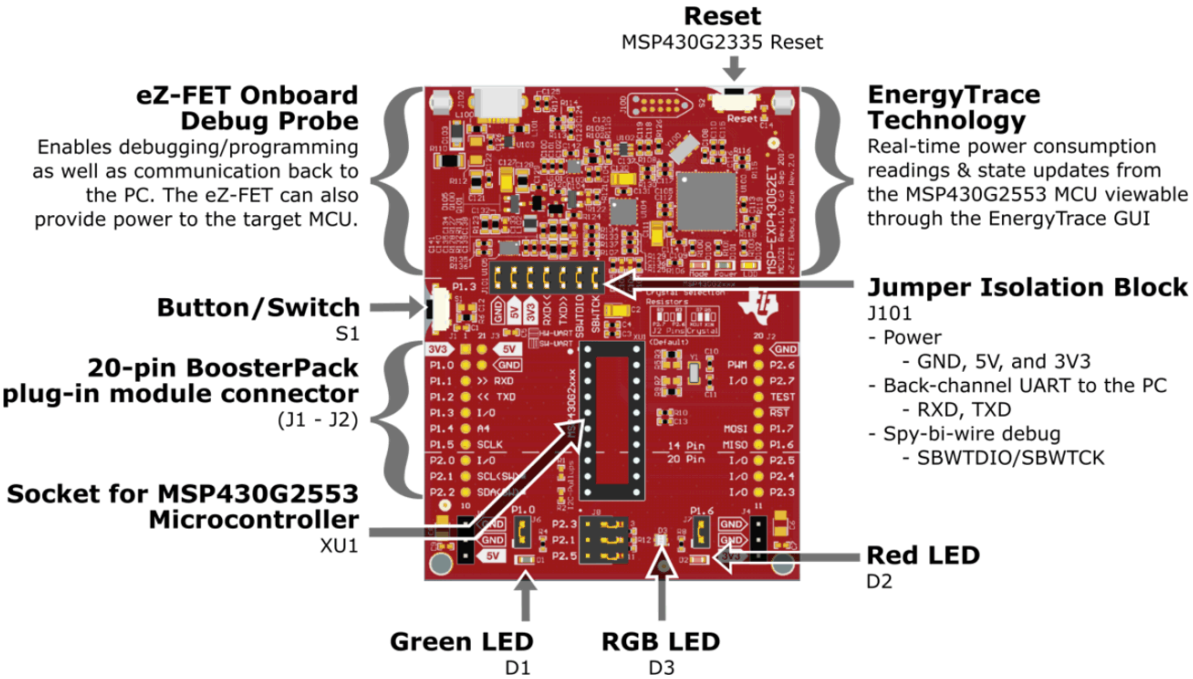

Figure 2. MSP-EXP430G2ET Overview

2.1 Block Diagram

Figure 3 shows the block diagram.

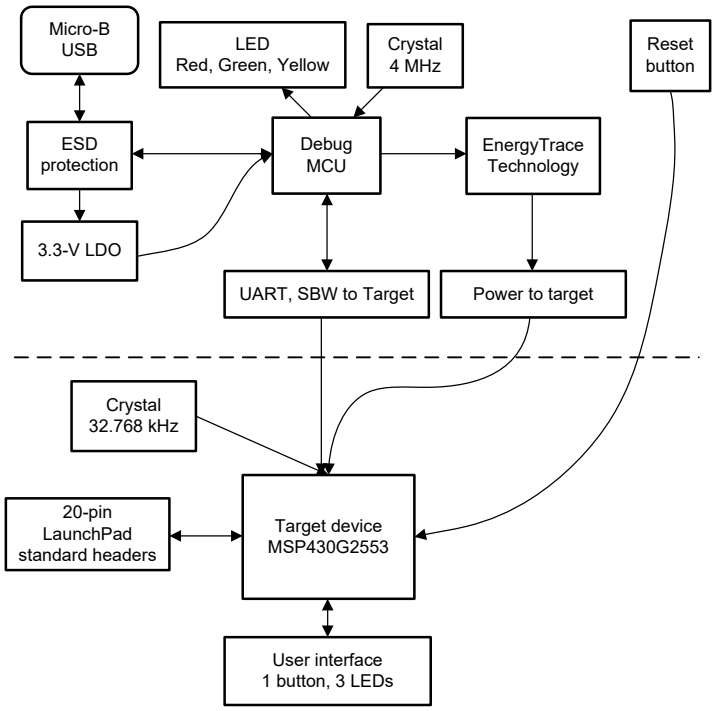

Figure 3. MSP-EXP430G2ET Block Diagram

Copyright © 2018–2020, Texas Instruments Incorporated

2.2 Hardware Features

2.2.1 MSP430G2553 MCU

The MSP430G2553 is a member of the MSP430 family of ultra-low-power MCUs. MSP430 MCUs features different sets of peripherals targeted for various applications. The MCU architecture, combined with five low-power modes, is optimized to achieve extended battery life in portable measurement applications.

Device features include:

- 1.8-V to 3.6-V operation
- 16-bit RISC architecture up to 16-MHz system clock
- 16KB of flash memory and 512 bytes of SRAM
- 8-channel 10-bit ADC
- 8-channel comparator
- Two 16-bit timers with three capture/compare registers (Timer_A)
- 24 GPIOs
- One universal serial communication interface (USCI_A) supports UART, IrDA, and SPI
- One USCI (USCI_B) supports SPI and I^2C

Figure 4 shows the pinout of the MSP430G2553 20-pin N (PDIP) package.

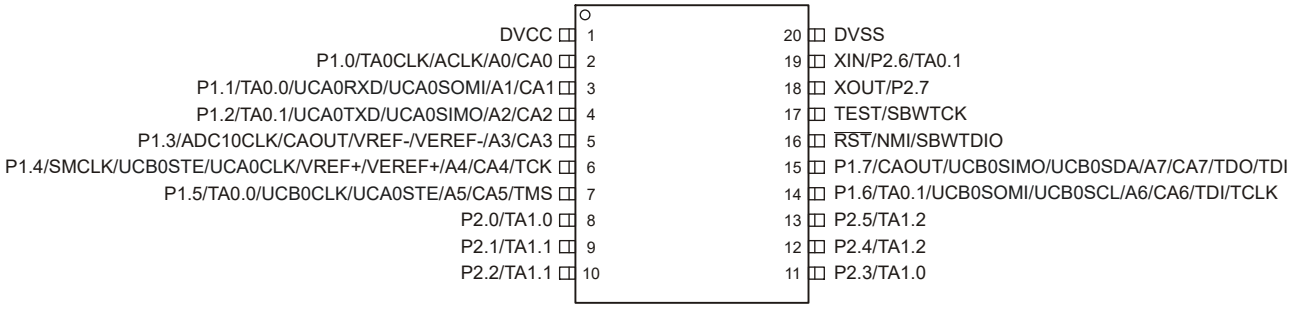

Figure 4. MSP430G2553 20-Pin N Package (Top View)

2.2.2 eZ-FET Onboard Debug Probe With EnergyTrace Technology

To keep development easy and cost effective, TI's LaunchPad Development Kits integrate an onboard debug probe, which eliminates the need for expensive programmers. The MSP-EXP430G2ET has the eZ-FET debug probe (see Figure 5), which is a simple and low-cost debugger that supports all MSP430 MCUs.

Copyright © 2018–2020, Texas Instruments Incorporated

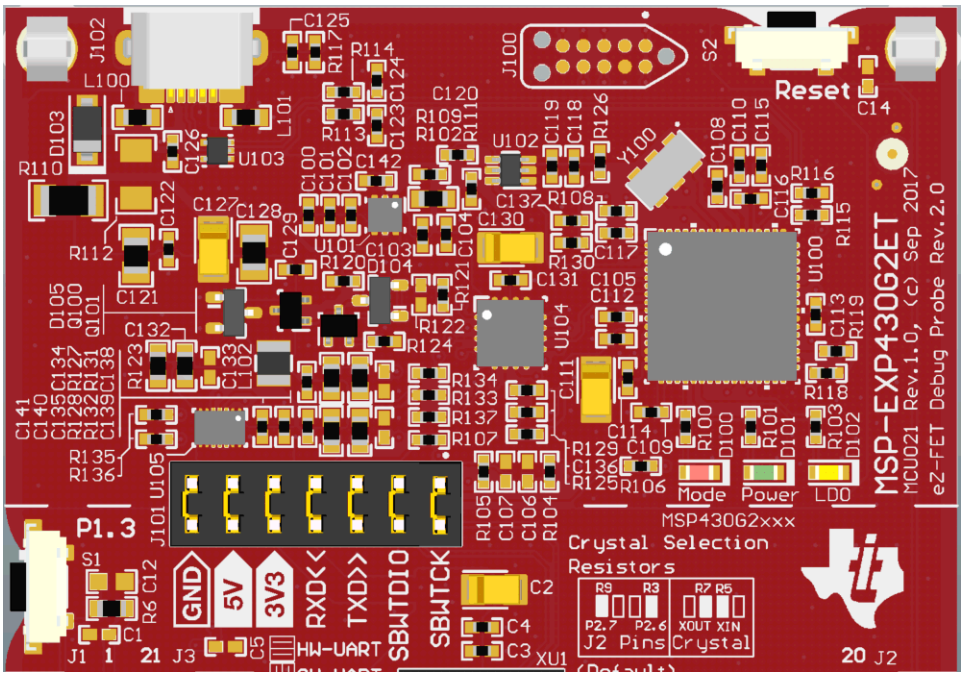

Figure 5. eZ-FET Debug Probe

The MSP-EXP430G2ET LaunchPad development kit features EnergyTrace technology but does not have support for EnergyTrace++ technology (see Table 1). The EnergyTrace technology functionality varies across the MSP430 portfolio.

Table 1. EnergyTrace Technology

Features	EnergyTrace Technology	EnergyTrace++ Technology
Current monitoring	✓	✓
CPU state		✓
Peripheral and system states		✓
Devices supported	All MSP430 MCUs	MSP430FR59xx and MSP430FR69xx MCUs
Development tool required	MSP-FET or eZ-FET	MSP-FET or eZ-FET

The dotted line through J101 shown in Figure 5 divides the eZ-FET debug probe from the target area. The signals that cross this line can be disconnected by jumpers on J101, the isolation jumper block. For details on the isolation jumper block, see Section 2.2.3.

The eZ-FET also provides a backchannel UART-over-USB connection with the host, which can be very useful during debugging and for easy communication with a PC. For details on the backchannel connection, see Section 2.2.4.

For more information about the eZ-FET hardware, see the schematics in Section 6 and the Hardware Design Files. For more information about the software and the debugger, see the eZ-FET wiki.

2.2.3 Debug Probe Connection: Isolation Jumper Block

The isolation jumper block at jumper J101 allows the user to connect or disconnect signals that cross from the eZ-FET domain into the MSP430G2553 target domain. This includes eZ-FET Spy-Bi-Wire signals, application UART signals, and 3.3-V and 5-V power.

Reasons to open these connections:

- To remove any and all influence from the eZ-FET debug probe for high-accuracy target power measurements

Copyright © 2018–2020, Texas Instruments Incorporated

- To control 3-V and 5-V power flow between the eZ-FET and target domains
- To expose the target MCU pins for uses other than onboard debugging and application UART communication
- To expose the programming and UART interface of the eZ-FET so that it can be used for MCUs other than the onboard MCU.

Table 2. Isolation Block Connections

Jumper	Description
GND	Ground
5V	5-V VBUS from USB
3V3	3.3-V rail, derived from VBUS in the eZ-FET domain
RXD <<	Backchannel UART: The target G2553 receives data through this signal. The arrows indicate the direction of the signal.
TXD >>	Backchannel UART: The target G2553 sends data through this signal. The arrows indicate the direction of the signal.
SBW RST	Spy-Bi-Wire debug: SBWTDIO data signal. This pin also functions as the RST signal (active low).
SBW TST	Spy-Bi-Wire debug: SBWTCK clock signal. This pin also functions as the TST signal.

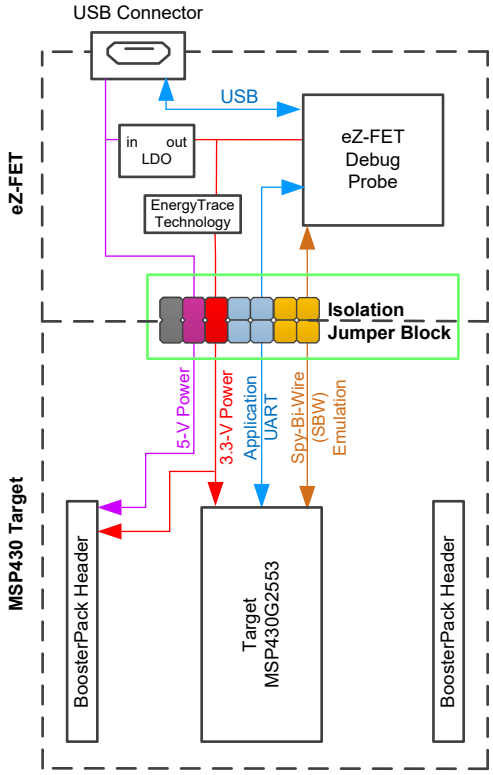

Figure 6. eZ-FET Isolation Jumper Block Diagram

2.2.4 Application (or Backchannel) UART

The backchannel UART allows communication with the USB host that is not part of the main functionality of the target application. This is useful during development and also provides a communication channel to the PC host. This communication can be used to create graphical user interfaces (GUIs) and other programs on the PC that communicate with the LaunchPad development kit.

Figure 6 shows the pathway of the backchannel UART. The backchannel UART is the UART on USCI_A0.

Copyright © 2018–2020, Texas Instruments Incorporated

On the host side, a virtual COM port for the application backchannel UART is generated when the LaunchPad development kit enumerates on the host. You can use any PC application that interfaces with COM ports, including terminal applications like Hyperterminal or Docklight, to open this port and communicate with the target application. You need to identify the COM port for the backchannel. On Windows PCs, Device Manager can assist.

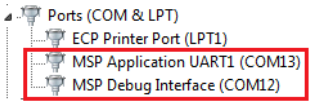

Figure 7. Application Backchannel UART in Device Manager

The backchannel UART is the "MSP Application UART1" port. In this case, Figure 7 shows COM13, but this port can vary from one host PC to the next. After you identify the correct COM port, configure it in your host application according to its documentation. You can then open the port and begin communication to it from the host.

On the target MSP430G2553 side, the backchannel is connected to the USCI_A0 module. The eZ-FET has a configurable baud rate; therefore, it is important to configure the baud rate of the PC application to the same rate as the USCI_A0.

NOTE: The backchannel UART connection in the isolation jumper block can also be configured to use a SW UART. The SW UART is done through the TimerA0 module located on pins P1.1 and P1.2. If the jumpers are in the horizontal position, the HW UART should be used. If the jumpers are in the vertical position, the SW UART should be used. The orientation guidelines are also printed in silkscreen on the board. It is recommended to use the HW UART configuration.

2.3 Power

The board was designed to accommodate various powering methods, including through the onboard eZ-FET as well as external or BoosterPack plug-in module power (see Figure 8).

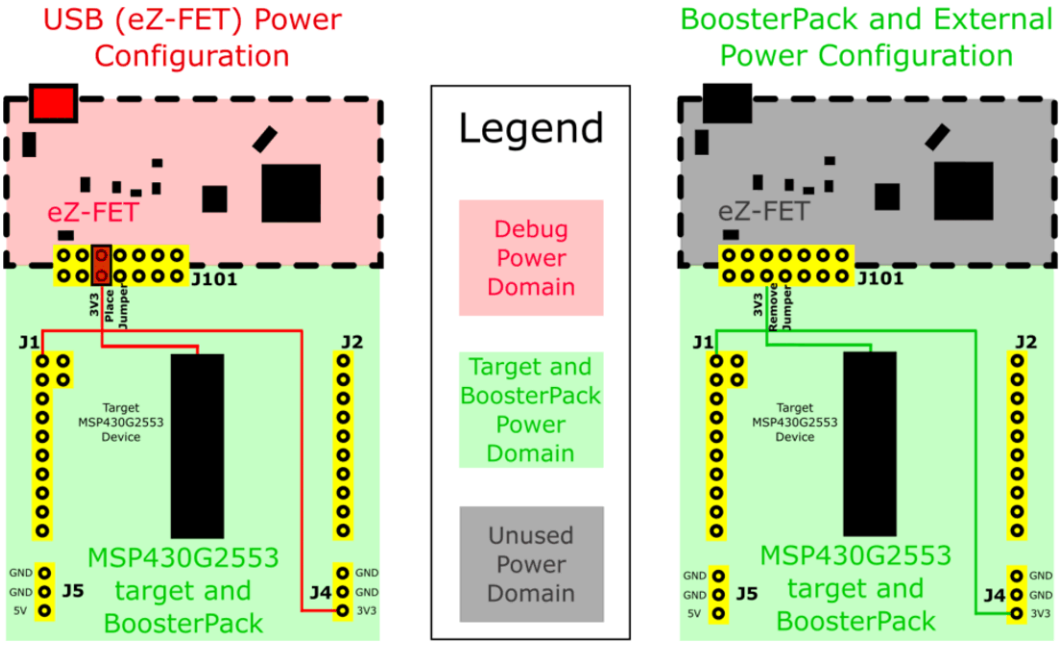

Figure 8. MSP-EXP430G2ET Power Block Diagram

Copyright © 2018–2020, Texas Instruments Incorporated

2.3.1 eZ-FET USB Power

The most common power-supply scenario is from USB through the eZ-FET debugger. This provides 5-V power from the USB and also regulates this power rail to 3.3 V for eZ-FET operation and 3.3 V to the target side of the LaunchPad development kit. Power from the eZ-FET is controlled by jumper J101. For 3.3 V, make sure that a jumper is connected across the J101 3V3 terminal.

2.3.2 BoosterPack Plug-in Module and External Power Supply

Header J4 is present on the board to supply external power directly. It is important to comply with the MCU voltage operation specifications when supplying external power. The MSP430G2553 has an operating range of 1.8 V to 3.6 V. For more information, see the MSP430G2x53, MSP430G2x13 Mixed-Signal Microcontrollers data sheet.

2.4 Measure MSP430 Current Draw

To measure the current draw of the MSP430G2553 using a multi-meter, use the 3V3 jumper on the J101 jumper isolation block. The current measured includes the target MCU and any current drawn through the BoosterPack plug-in module headers.

To measure ultra-low power, follow these steps:

1. Remove the 3V3 jumper in the J101 isolation block, and attach an ammeter across this jumper.
2. Consider the effect that the backchannel UART and any circuitry attached to the MSP430G2553 may have on current draw. Consider disconnecting these at the isolation jumper block, or at least consider their current sinking and sourcing capability in the final measurement.
3. Make sure there are no floating inputs/outputs (I/Os) on the MSP430G2553. These cause unnecessary extra current draw. Every I/O should either be driven out or, if it is an input, should be pulled or driven to a high or low level.
4. Begin target execution.
5. Measure the current. If the current levels are fluctuating, it may be difficult to get a stable measurement. It is easier to measure quiescent states.

EnergyTrace technology can also be used to compare various current profiles and better optimize your energy performance.

2.5 Clocking

The MSP-EXP430G2ET provides an external clock in addition to the internal clocks in the MCU.

- Y1: 32.768-kHz 12.5-pF crystal

The 32.768-kHz crystal allows for lower LPM sleep currents than do the other low-frequency clock sources. Therefore, the presence of the crystal allows the full range of low-power modes to be used.

By default, the crystal is not connected to the MSP430G2553 because the target pins are multiplexed with two BoosterPack plug-in module header pins. 0-Ω resistors R3 and R9 must be removed, while R5 and R7 must be shorted across to connect the external crystal to the MSP430G2553. See the onboard crystal selection resistors silkscreen for how to configure the resistors to select between the crystal or the BoosterPack plug-in module pins.

The internal clocks in the MCU default to the following configuration:

- MCLK: DCO at 1 MHz
- SMCLK: DCO at 1 MHz
- ACLK: LFXT1 at 32.768 kHz

For more information about configuring internal clocks and using the external oscillators, see the MSP430x2xx Family User's Guide.

2.6 Using the eZ-FET Debug Probe With a Different Target

The eZ-FET debug probe on the LaunchPad development kit can interface to most MSP430 MCUs, not just the onboard MSP430G2553 target MCU.

Copyright © 2018–2020, Texas Instruments Incorporated

1. Disconnect every jumper in the isolation jumper block. This is necessary, because the debug probe cannot connect to more than one target at a time over the Spy-Bi-Wire (SBW) connection.
2. Make sure the target board has proper connections for SBW. Note that to be compatible with SBW, the capacitor on RST/SBWTDIO cannot be greater than 2.2 nF. The documentation for designing MSP430 JTAG interface circuitry is the MSP430 Hardware Tools User's Guide.
3. Connect these signals from the debug probe side of the isolation jumper block to the target hardware:
   - 5 V (if 5 V is needed)
   - 3.3 V
   - GND
   - SBWTDIO
   - SBWTCK
   - TXD (if the UART backchannel is to be used)
   - RXD (if the UART backchannel is to be used)

   This wiring can be done either with jumper wires or by designing the board with a connector that plugs into the isolation jumper block.

2.7 BoosterPack Plug-in Module Pinout

The LaunchPad development kit adheres to the 20-pin LaunchPad development kit pinout standard. A standard was created to aid compatibility between LaunchPad development kit and BoosterPack plug-in module tools across the TI ecosystem.

While most BoosterPack plug-in modules are compliant with the standard, some are not. The MSP-EXP430G2ET LaunchPad development kit is compatible with all 20-pin BoosterPack plug-in modules that comply with the standard. If the reseller or owner of the BoosterPack plug-in module does not explicitly indicate compatibility with the MSP-EXP430G2ET LaunchPad development kit, compare the schematic of the candidate BoosterPack plug-in module with the LaunchPad development kit to ensure compatibility. Sometimes conflicts can be resolved by changing the MSP430G2553 pin function configuration in software.

To check the compatibility of your desired BoosterPack plug-in modules for your design, with a LaunchPad development kit of your choice, you can use the BoosterPack Checker tool (see Figure 9). This allows you to select any LaunchPad development kit we offer and determine its compatibility with any number of BoosterPack plug-in modules that we offer. You can also add your own BoosterPack plug-in module to check its compatibility as you prototype that next design.

Copyright © 2018–2020, Texas Instruments Incorporated

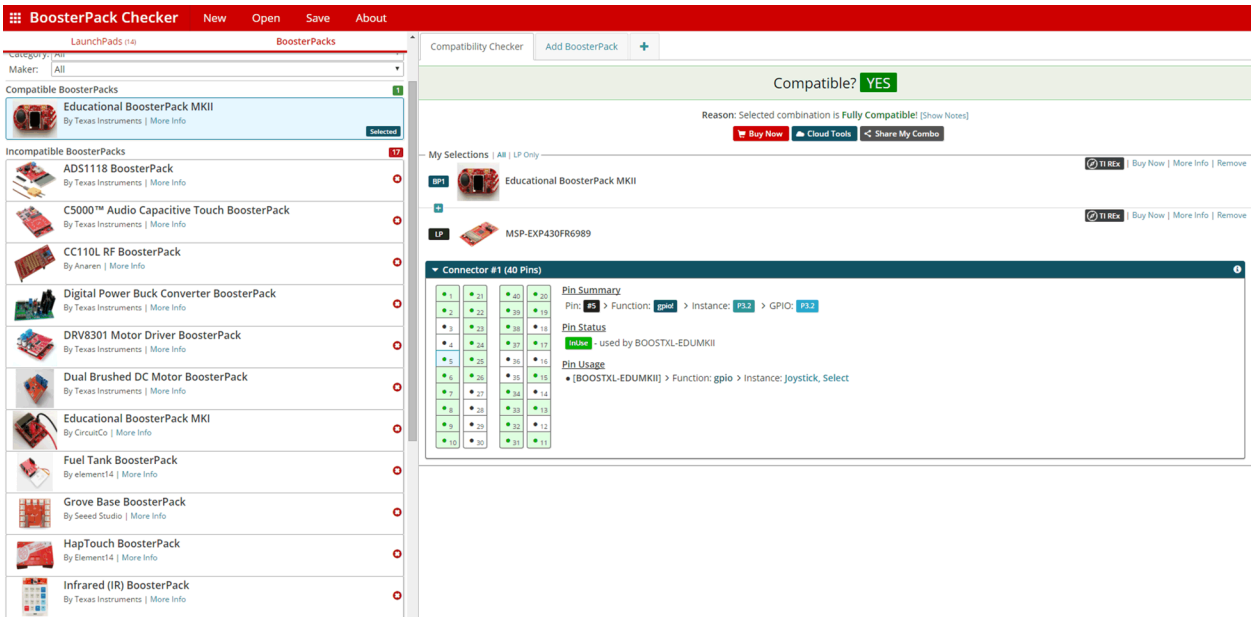

Figure 9. BoosterPack Checker Tool

Figure 10 shows the 20-pin pinout of the connector from the LaunchPad development kit to a BoosterPack plug-in module.

Software configuration of the pin functions plays a role in compatibility. The LaunchPad development kit side of the dashed line shows only the applicable function for conforming to the standard. However, each pin has other functionality that can be configured by the software. See the MSP430G2553 data sheet for more details on individual pin functions.

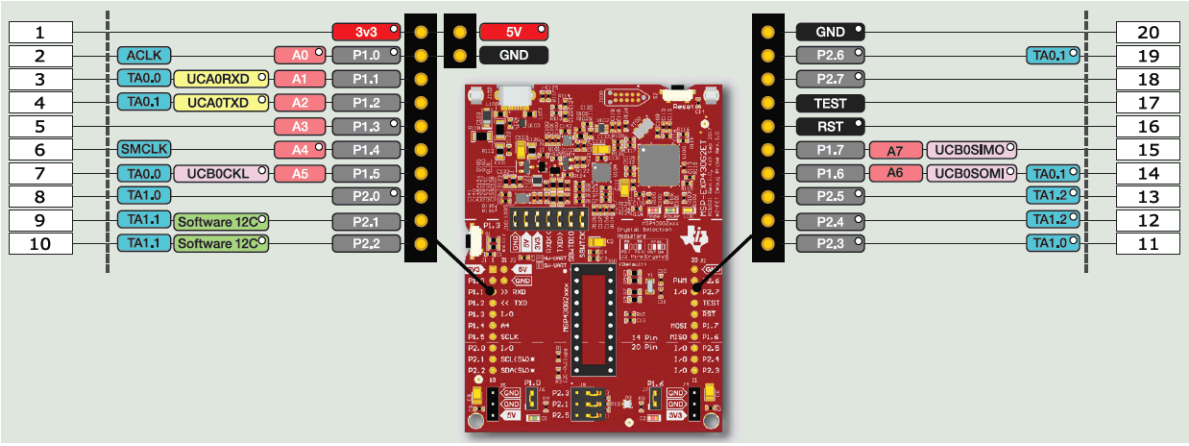

Figure 10. Pinout of Connector From LaunchPad Development Kit to BoosterPack Plug-in Module

2.8 20-Pin DIP Socket

The MSP-EXP430G2ET comes with the MSP430G2553 MCU plugged into the DIP target socket. However, both PDIP14 and PDIP20 packages of the MSP430G2xx entry-level MCUs and the MSP430F20xx MCUs can be inserted into the DIP socket aligned to pin 1 (see Figure 11). For a complete list of supported MCUs, see Section 2.9.

Copyright © 2018–2020, Texas Instruments Incorporated

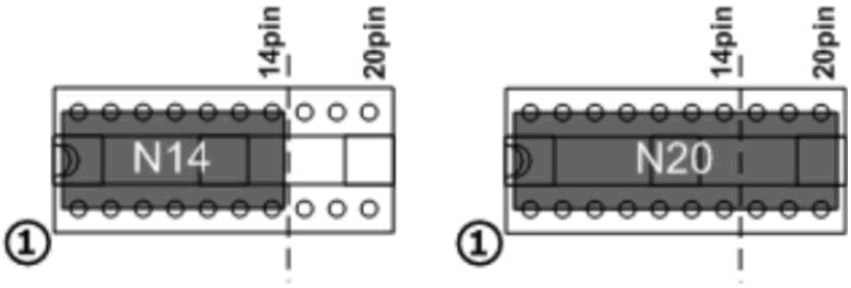

Figure 11. Insert Device Into Target Socket

2.9 Supported Devices

TI offers several MSP430 MCUs in a PDIP package that are compatible with this LaunchPad development kit. Table 3 lists the supported MCUs.

Table 3. Supported Devices

Part Number	Family	Description
MSP430F2001	F2xx	16-bit Ultra-Low-Power Microcontroller, 1KB Flash, 128B RAM, Comparator
MSP430F2002	F2xx	16-bit Ultra-Low-Power Microcontroller, 1KB Flash, 128B RAM, 10-Bit SAR A/D, USI for SPI/I^{2}C
MSP430F2003	F2xx	16-bit Ultra-Low-Power Microcontroller, 1KB Flash, 128B RAM, 16-Bit Sigma-Delta A/D, USI for SPI/I^{2}C
MSP430F2011	F2xx	16-bit Ultra-Low-Power Microcontroller, 2KB Flash, 128B RAM, Comparator
MSP430F2012	F2xx	16-bit Ultra-Low-Power Microcontroller, 2KB Flash, 128B RAM, 10-Bit SAR A/D, USI for SPI/I^{2}C
MSP430F2013	F2xx	16-bit Ultra-Low-Power Microcontroller, 2KB Flash, 128B RAM, 16-Bit Sigma-Delta A/D, USI for SPI/I^{2}C
MSP430G2001	G2xx	16-bit Ultra-Low-Power Microcontroller, 512B Flash, 128B RAM
MSP430G2101	G2xx	16-bit Ultra-Low-Power Microcontroller, 1KB Flash, 128B RAM
MSP430G2111	G2xx	16-bit Ultra-Low-Power Microcontroller, 1KB Flash, 128B RAM, Comparator
MSP430G2121	G2xx	16-bit Ultra-Low-Power Microcontroller, 1KB Flash, 128B RAM, USI for SPI/I^{2}C
MSP430G2131	G2xx	16-bit Ultra-Low-Power Microcontroller, 1KB Flash, 128B RAM, 10-Bit SAR A/D, USI for SPI/I^{2}C
MSP430G2201	G2xx	16-bit Ultra-Low-Power Microcontroller, 2KB Flash, 128B RAM
MSP430G2211	G2xx	16-bit Ultra-Low-Power Microcontroller, 2KB Flash, 128B RAM, Comparator
MSP430G2221	G2xx	16-bit Ultra-Low-Power Microcontroller, 2KB Flash, 128B RAM, USI for SPI/I^{2}C
MSP430G2231	G2xx	16-bit Ultra-Low-Power Microcontroller, 2KB Flash, 128B RAM, 10-Bit SAR A/D, USI for SPI/I^{2}C
MSP430G2102	G2xx	16-bit Ultra-Low-Power Microcontroller, 1KB Flash, 256B RAM, USI for SPI/I^{2}C
MSP430G2202	G2xx	16-bit Ultra-Low-Power Microcontroller, 2KB Flash, 256B RAM, USI for SPI/I^{2}C
MSP430G2302	G2xx	16-bit Ultra-Low-Power Microcontroller, 4KB Flash, 256B RAM, USI for SPI/I^{2}C
MSP430G2402	G2xx	16-bit Ultra-Low-Power Microcontroller, 8KB Flash, 256B RAM, USI for SPI/I^{2}C
MSP430G2112	G2xx	16-bit Ultra-Low-Power Microcontroller, 1KB Flash, 256B RAM, Comparator, USI for SPI/I^{2}C
MSP430G2212	G2xx	16-bit Ultra-Low-Power Microcontroller, 2KB Flash, 256B RAM, Comparator, USI for SPI/I^{2}C
MSP430G2312	G2xx	16-bit Ultra-Low-Power Microcontroller, 4KB Flash, 256B RAM, Comparator, USI for SPI/I^{2}C
MSP430G2412	G2xx	16-bit Ultra-Low-Power Microcontroller, 8KB Flash, 256B RAM, Comparator, USI for SPI/I^{2}C
MSP430G2132	G2xx	16-bit Ultra-Low-Power Microcontroller, 1KB Flash, 256B RAM, 10-Bit SAR A/D, USI for SPI/I^{2}C
MSP430G2232	G2xx	16-bit Ultra-Low-Power Microcontroller, 2KB Flash, 256B RAM, 10-Bit SAR A/D, USI for SPI/I^{2}C
MSP430G2332	G2xx	16-bit Ultra-Low-Power Microcontroller, 4KB Flash, 256B RAM, 10-Bit SAR A/D, USI for SPI/I^{2}C
MSP430G2432	G2xx	16-bit Ultra-Low-Power Microcontroller, 8KB Flash, 256B RAM, 10-Bit SAR A/D, USI for SPI/I^{2}C
MSP430G2152	G2xx	16-bit Ultra-Low-Power Microcontroller, 1KB Flash, 256B RAM, 10-Bit SAR A/D, Comparator, USI for SPI/I^{2}C
MSP430G2252	G2xx	16-bit Ultra-Low-Power Microcontroller, 2KB Flash, 256B RAM, 10-Bit SAR A/D, Comparator, USI for SPI/I^{2}C
MSP430G2352	G2xx	16-bit Ultra-Low-Power Microcontroller, 4KB Flash, 256B RAM, 10-Bit SAR A/D, Comparator, USI for SPI/I^{2}C

Copyright © 2018–2020, Texas Instruments Incorporated

Table 3. Supported Devices (continued)

Part Number	Family	Description
MSP430G2452	G2xx	16-bit Ultra-Low-Power Microcontroller, 8KB Flash, 256B RAM, 10-Bit SAR A/D, Comparator, USI for SPI/I²C
MSP430G2153	G2xx	16-bit Ultra-Low-Power Microcontroller, 1KB Flash, 256B RAM, 10-Bit SAR A/D, Comparator, USCI for I²C/SPI/UART
MSP430G2203	G2xx	16-bit Ultra-Low-Power Microcontroller, 2KB Flash, 256B RAM, Comparator, USCI for I²C/SPI/UART
MSP430G2313	G2xx	16-bit Ultra-Low-Power Microcontroller, 2KB Flash, 256B RAM, Comparator, USCI for I²C/SPI/UART
MSP430G2333	G2xx	16-bit Ultra-Low-Power Microcontroller, 2KB Flash, 256B RAM, 10-Bit SAR A/D, Comparator, USCI for I²C/SPI/UART
MSP430G2353	G2xx	16-bit Ultra-Low-Power Microcontroller, 2KB Flash, 256B RAM, 10-Bit SAR A/D, Comparator, USCI for I²C/SPI/UART
MSP430G2403	G2xx	16-bit Ultra-Low-Power Microcontroller, 8KB Flash, 512B RAM,, Comparator, USCI for I²C/SPI/UART
MSP430G2413	G2xx	16-bit Ultra-Low-Power Microcontroller, 8KB Flash, 512B RAM, Comparator, USCI for I²C/SPI/UART
MSP430G2433	G2xx	16-bit Ultra-Low-Power Microcontroller, 8KB Flash, 512B RAM, 10-Bit SAR A/D, Comparator, USCI for I²C/SPI/UART
MSP430G2453	G2xx	16-bit Ultra-Low-Power Microcontroller, 8KB Flash, 512B RAM, 10-Bit SAR A/D, Comparator, USCI for I²C/SPI/UART
MSP430G2513	G2xx	16-bit Ultra-Low-Power Microcontroller, 16KB Flash, 512B RAM, Comparator, USCI for I²C/SPI/UART
MSP430G2533	G2xx	16-bit Ultra-Low-Power Microcontroller, 16KB Flash, 512B RAM, 10-Bit SAR A/D, Comparator, USCI for I²C/SPI/UART
MSP430G2553	G2xx	16-bit Ultra-Low-Power Microcontroller, 16KB Flash, 512B RAM, 10-Bit SAR A/D, Comparator, USCI for I²C/SPI/UART

2.10 Design Files

2.10.1 Hardware

See Section 6 for the schematics. All design files including schematics, layout, bill of materials (BOM), Gerber files, and documentation are available in the MSP-EXP430G2ET Hardware Design Files.

2.10.2 Software

All design files including TI-TXT object-code firmware images, software example projects, and documentation are available in the MSP-EXP430G2ET LaunchPad development kit download page.

2.11 Hardware Change log

Table 4 lists the revision history of the MSP430G2553 LaunchPad development kit hardware.

Table 4. Hardware Change Log

PCB Revision	Description
Rev 1.0	Initial Release

3 Software Examples

Two software examples are included with the MSP430G2553 LaunchPad development kit (see Table 5), which can be found in the MSP-EXP430G2ET LaunchPad development kit download page and are also available inside MSPWare.

Copyright © 2018–2020, Texas Instruments Incorporated

Table 5. Software Examples

Demo Name	BoosterPack Plug-in Module Required	Description	More Details
OutOfBox_MSP-EXP430G2ET	None	The out-of-box demo preprogrammed on the LaunchPad development kit from the factory. Demonstrates features of the MSP430G2553 MCU.	Section 3.1
BlinkLED_MSP-EXP430G2ET	None	Blinks an LED on the LaunchPad development kit at a fixed interval.	Section 3.2

To use any of the software examples with the LaunchPad development kit, you must have an integrated development environment (IDE) that supports the MSP430G2553 MCU.

Table 6. IDE Minimum Requirements for MSP-EXP430G2ET

Code Composer Studio IDE	IAR Embedded Workbench for MSP430 IDE
v7.0 or later	v7.11.1 or later

For more details on how to get started quickly, and where to download the latest CCS and IAR IDEs, see Section 4.

3.1 Out-of-Box Software Example

This section describes the functionality and structure of the out-of-box software that is preloaded on the EVM.

The Out-of-Box demo for the MSP-EXP430G2ET LaunchPad development kit starts with a two LED toggle sequence. The demo also implements a real-time temperature sensor.

3.1.1 Source File

The OOBE project includes one main.c source file (see Table 7).

Table 7. Source File

Name	Description
main.c	Contains the main Out-of-Box demo and auxiliary functions

3.1.2 Overview

The online cloud-based MSP-EXP430G2ET OOBE GUI can be used to download this demo to your board and visualize the temperature data. A serial terminal can also be used to display the data being sent from the demo to the PC (application UART settings: 9600, 8, 1, n).

When powering up the Out-of-Box demo, the MSP-EXP430G2ET LaunchPad development kit starts with a two LED toggle sequence. At any time, press S1 to switch to the Live Temperature mode.

3.1.3 Live Temperature Mode

In this mode, the LaunchPad development kit repeatedly measures the MSP430G2553 MCU internal temperature and transfers the data to the PC through UART.

A reference temperature is taken at the beginning of this mode, and the LEDs of the LaunchPad development kit signal a rise or fall in temperature by varying the brightness of the on-board red or green LED, respectively. The reference temperature can also be recalibrated with another button press on P1.3.

The application keeps track of the temperature threshold, and when a new temperature data is acquired, it is compared against the threshold. If measured temperature is below the threshold, the red LED will illuminate, and if the measured temperature is above the threshold, the green LED will illuminate.

Copyright © 2018–2020, Texas Instruments Incorporated

Pressing S1 will recalibrate the temperature threshold in this mode. The further the recorded temperature is from the threshold, the brighter the corresponding LEDs will illuminate.

The user can influence the temperature of the MCU by blowing hot or cold air and observing the changes in the user LED brightness or see data changes on the GUI.

The demo application uses the on-chip peripherals of the MSP430G2553 MCU such as the 10-bit ADC, which samples the internal temperature sensor, and 16-bit timers, which drive the PWM to vary brightness of the LEDs and enable software UART for communication with the PC. The MSP430G2553 offers a USCI interface that is capable of communicating through UART at up to 2 MBaud, but to be aligned with all the other MSP430G2xx MCUs, the demo uses the Timer UART implementation, which can be used on all the other MCUs. This way the demo can be used with any other MSP430G2xx MCU with an integrated ADC, without any change in the program.

3.2 Blink LED Example

This simple software example shows how to software toggle a GPIO to blink an LED on the LaunchPad development kit.

3.2.1 Source File Structure

The Blink LED project includes one main.c source file (see Table 8).

Table 8. Source File and Folders

Name	Description
main.c	The Blink LED main function

The main code uses register level access code to halt the watchdog timer and to configure and toggle the P1.0 GPIO pin connected to the LED inside a software loop.

4 Resources

4.1 Integrated Development Environments

Although the source files can be viewed with any text editor, more can be done with the projects if they are opened with a development environment like Code Composer Studio IDE (CCS) or IAR Embedded Workbench IDE.

4.1.1 TI Cloud Development Tools

TI's Cloud-based software development tools provide instant access to MSPWare content and a web-based IDE.

4.1.1.1 TI Resource Explorer Cloud

TI Resource Explorer Cloud provides a web interface for browsing examples, libraries and documentation found in MSPWare without having to download files to your local drive.

Try TI Resource Explorer Cloud now at https://dev.ti.com/.

Copyright © 2018–2020, Texas Instruments Incorporated

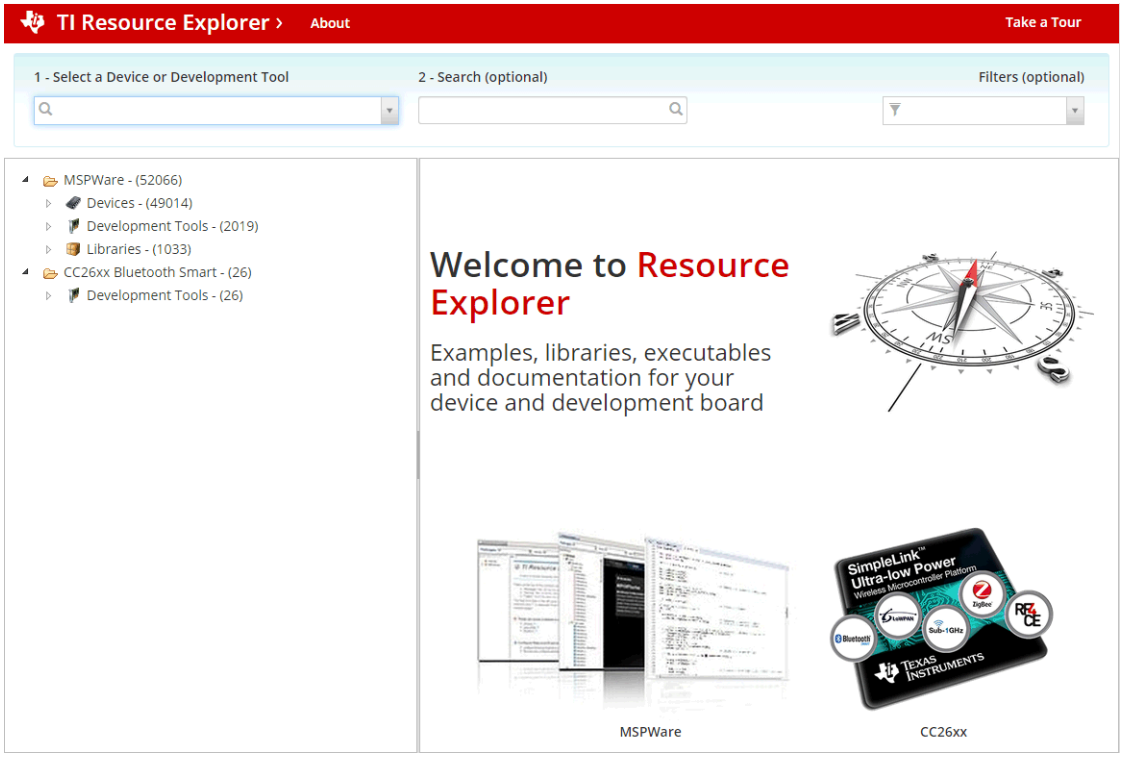

Figure 12. TI Resource Explorer Cloud

4.1.1.2 Code Composer Studio Cloud

Code Composer Studio Cloud (CCS Cloud) is a web-based IDE that enables you to quickly create, edit, build and debug applications for your LaunchPad development kit. No need to download and install large software packages, simply connect your LaunchPad development kit and begin. You can choose to select from a large variety of examples in MSPWare software and Energia or develop your own application. CCS Cloud supports debug features such as execution control, breakpoints and viewing variables.

For a comparison of CCS Cloud and CCS Desktop, visit Should I use CCS Cloud or CCS Desktop.

Visit Code Composer Studio Cloud now at http://dev.ti.com.

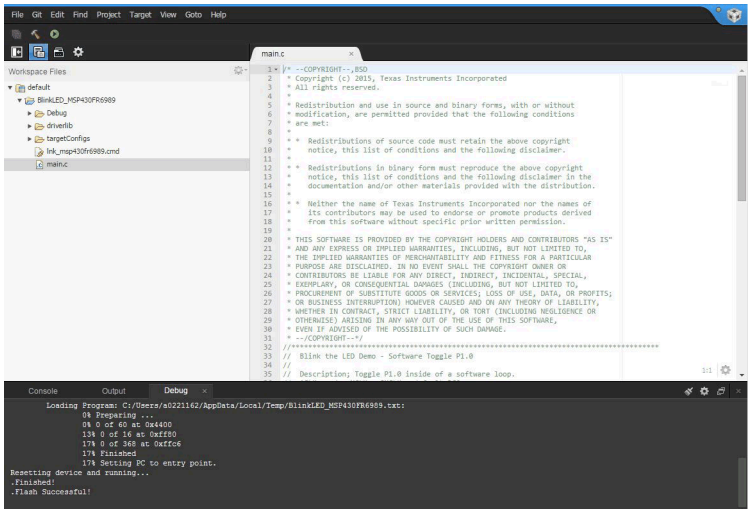

Figure 13. CCS Cloud

Copyright © 2018–2020, Texas Instruments Incorporated

4.1.2 Code Composer Studio IDE

Code Composer Studio (CCS) Desktop is a professional integrated development environment that supports TI's microcontroller and embedded processors portfolio. Code Composer Studio IDE comprises a suite of tools used to develop and debug embedded applications. It includes an optimizing C/C++ compiler, source code editor, project build environment, debugger, profiler, and many other features.

You can learn more about CCS and download it at http://www.ti.com/tool/ccstudio.

CCS v7.0 or higher is required. When CCS has been launched, and a workspace directory chosen, use Project>Import Existing CCS Eclipse Project. Direct it to the desired demo project directory that contains main.c.

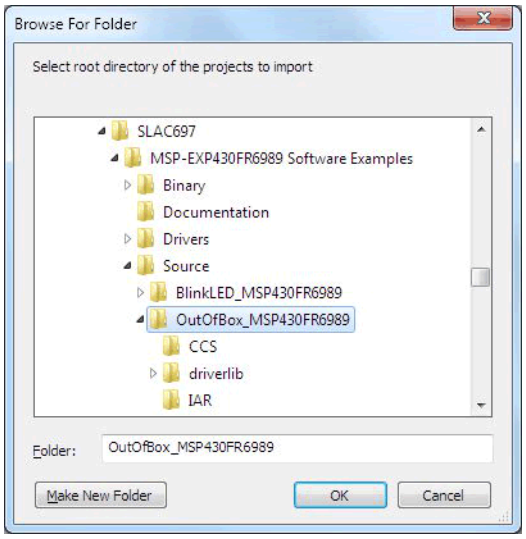

Figure 14. Directing the Project>Import Function to the Demo Project

Selecting the \CCS subdirectory also works. The CCS-specific files are located there.

When you click OK, CCS should recognize the project and allow you to import it. The indication that CCS has found it is that the project appears in the box shown in Figure 15, and it has a checkmark to the left.

Copyright © 2018–2020, Texas Instruments Incorporated

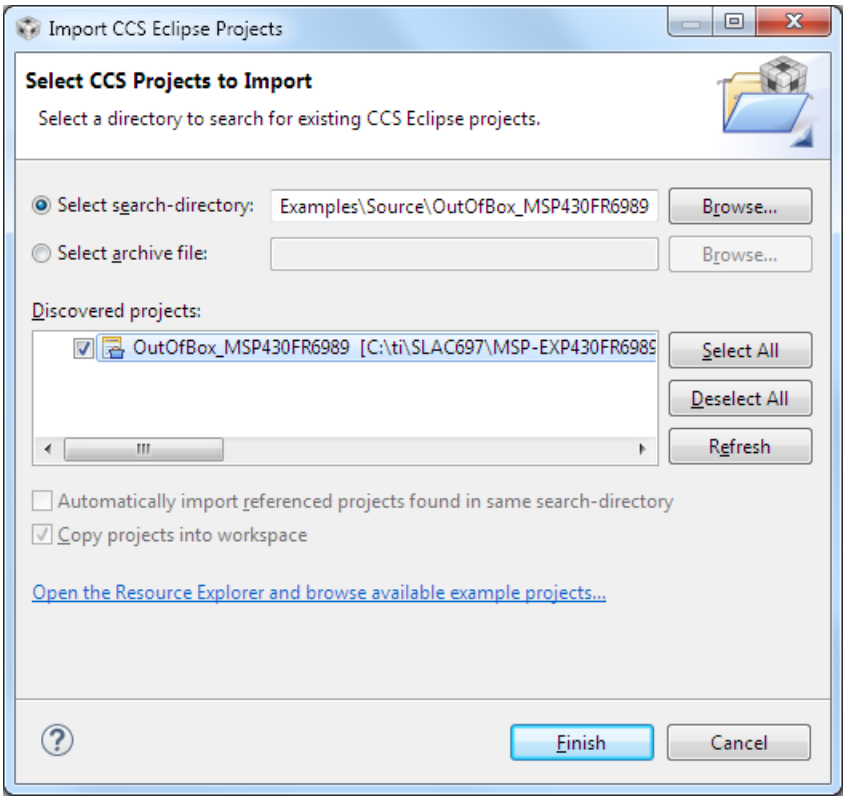

Figure 15. When CCS Has Found the Project

Sometimes CCS finds the project but does not show a checkmark; this might mean that your workspace already has a project by that name. You can resolve this by renaming or deleting that project. Even if you do not see it in the CCS workspace, be sure to check the workspace directory on the file system.

4.1.3 IAR Embedded Workbench for 430 IDE

IAR Embedded Workbench for MSP430 (IAR EW430) is another very powerful integrated development environment that allows you to develop and manage complete embedded application projects. It integrates the IAR C/C++ Compiler, IAR Assembler, IAR ILINK Linker, editor, project manager, command line build utility, and IAR C-SPY® Debugger.

You can learn more about IAR Embedded Workbench for MSP430 and download it at the IAR website.

IAR EW430 v7.11.1 or higher is required. To open the demo in IAR EW430, click File>Open>Workspace…, and browse to the *.eww workspace file inside the \IAR subdirectory of the desired demo. All workspace information is contained within this file.

The subdirectory also has an *.ewp project file. This file can be opened into an existing workspace by clicking Project>Add-Existing-Project….

Although the software examples have all of the code required to run them, IAR EW430 users can download and install MSPWare, which contains MSP430 libraries and the TI Resource Explorer. These are already included in a CCS installation (unless the user selected otherwise).

4.2 LaunchPad Development Kit Websites

More information about the LaunchPad development kit, supported BoosterPack plug-in modules, and available resources can be found at:

- MSP-EXP430G2ET tool folder: Resources specific to this particular LaunchPad development kit
- TI's LaunchPad portal: Information about all LaunchPad development kits from TI

Copyright © 2018–2020, Texas Instruments Incorporated

4.3 MSPWare and TI Resource Explorer

TI Resource Explorer is a tool integrated into CCS that allows you to browse through available design resources. TI Resource Explorer will help you quickly find what you need inside packages including MSPWare, ControlSuite™ libraries, TivaWare™ software, and more. TI Resource Explorer is well organized to find everything that you need quickly, and you can import software projects into your workspace in one click.

TI Resource Explorer Cloud is one of the TI Cloud Development tools, and is tightly integrated with CCS Cloud. See Section 4.1.1 for more information.

MSPWare is a collection of code examples, software libraries, data sheets and other design resources for all MSP430 MCUs delivered in a convenient package – essentially everything developers need to become MSP experts.

In addition to providing a complete collection of existing MSP design resources, MSPWare also includes a high level API called MSP Driver Library. This library makes it easy to talk to MSP hardware. More information can be found at http://www.ti.com/tool/mspware.

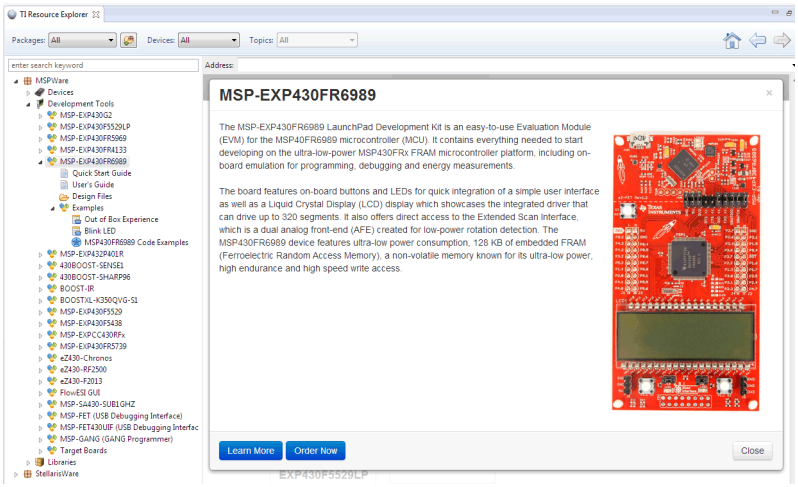

Figure 16. Using TI Resource Explorer to Browse MSP-EXP430G2ET in MSPWare

Inside TI Resource Explorer, these examples and many more can be found, and easily imported into CCS with one click.

4.4 MSP430G2553 MCU

4.4.1 Device Documentation

At some point, you will probably want more information about the MSP430G2553 MCU. For every MSP430 MCU, the documentation is organized as shown in Table 9.

Table 9. How MSP Device Documentation is Organized

Document	For MSP430G2553	Description
Device family user's guide	MSP430x2xx Family User's Guide	Architectural information about the MCU, including all modules and peripherals such as clocks, timers, ADC, and so on.
Device-specific data sheet	MSP430G2x53, MSP430G2x13 Mixed-Signal Microcontrollers data sheet	Device-specific information and all parametric information for this MCU

Copyright © 2018–2020, Texas Instruments Incorporated

4.4.2 MSP430G2553 Code Examples

MSP430G2x53, MSP430G2x33, MSP430G2x13, MSP430G2x03 Code Examples is a set of simple C examples that demonstrate how to use the entire set of peripherals on the MSP430G2553 MCU, including serial communication, ADC10, timer, and others, through direct register access. Every MSP derivative has a set of these code examples. When starting a new project or adding a new peripheral, these examples serve as a great starting point.

4.4.3 MSP430 Application Notes and TI Designs

There are many application notes that can be found at http://www.ti.com/msp430, as well as TI Designs with practical design examples and topics.

4.5 Community Resources

4.5.1 TI E2E™ Community

Search the forums at https://e2e.ti.com. If you cannot find your answer, post your question to the community.

4.5.2 Community at Large

Many online communities focus on the LaunchPad development kit – for example, http://www.43oh.com. You can find additional tools, resources, and support from these communities.

Copyright © 2018–2020, Texas Instruments Incorporated

5 FAQ

Q: I can't get the backchannel UART to connect. What's wrong?

A: Check the following:

- Do the baud rate in the host terminal application and the USCI settings match?
- Are the appropriate jumpers in place, on the isolation jumper block?
- Probe on RXD and send data from the host. If you don't see data, it might be a problem on the host side.
- Probe on TXD while sending data from the MSP. If you don't see data, it might be a configuration problem with the USCI module.

Q: The device is not answering to any communication, JTAG or UART.

A: If you are experiencing difficulties in communicating to the attached MSP430 target MCU, even though all the communication drivers for the MSP-EXP430G2ET are loaded correctly, the emulator is probably set to a wrong communication state. This can be fixed by reconnecting the LaunchPad development kit and restarting the communicating application. Also make sure that all the jumpers on J101 are connected properly between the emulator and the target MCU.

Copyright © 2018–2020, Texas Instruments Incorporated

6 Schematics

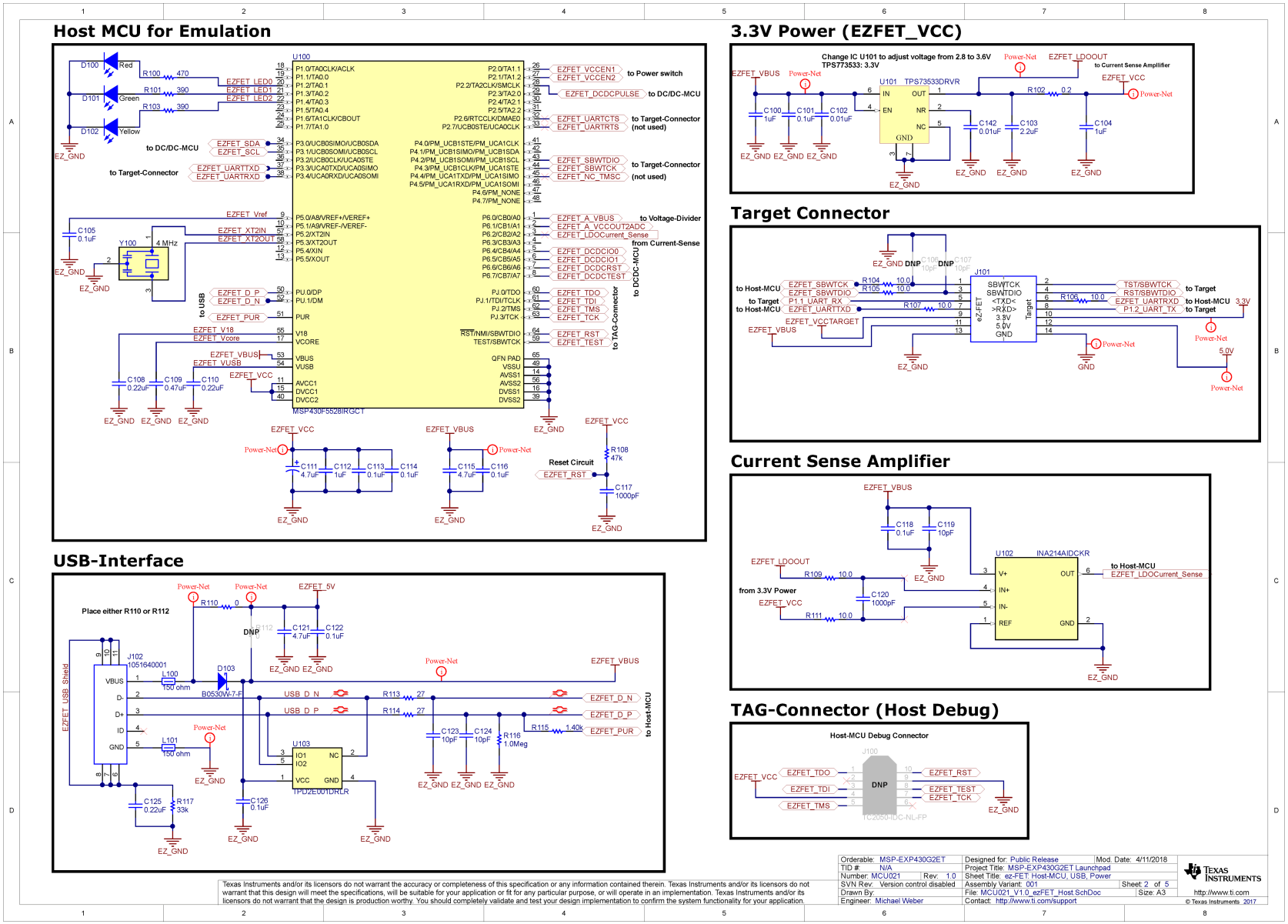

Figure 17. Schematics (1 of 3)

Copyright © 2018–2020, Texas Instruments Incorporated

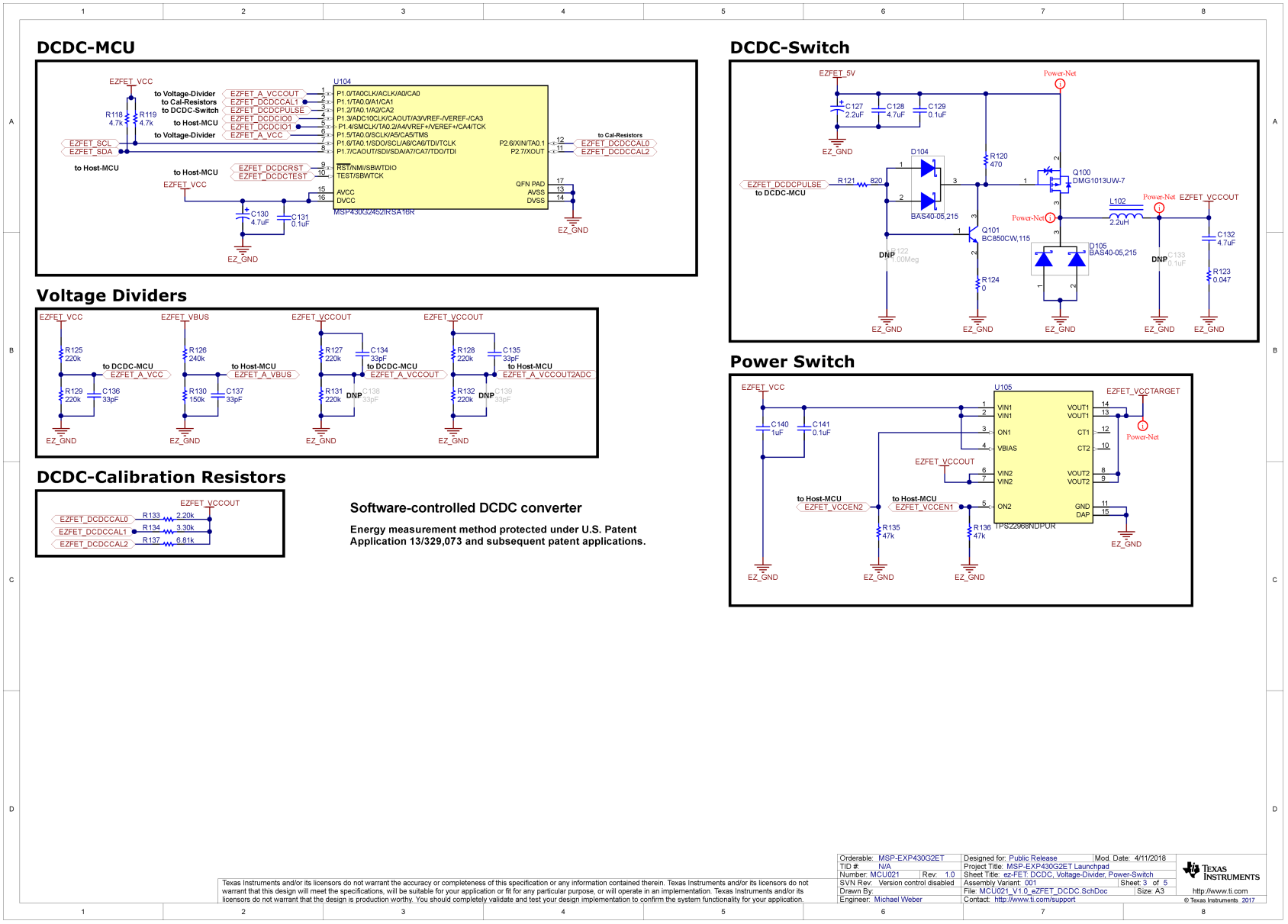

Figure 18. Schematics (2 of 3)

Copyright © 2018–2020, Texas Instruments Incorporated

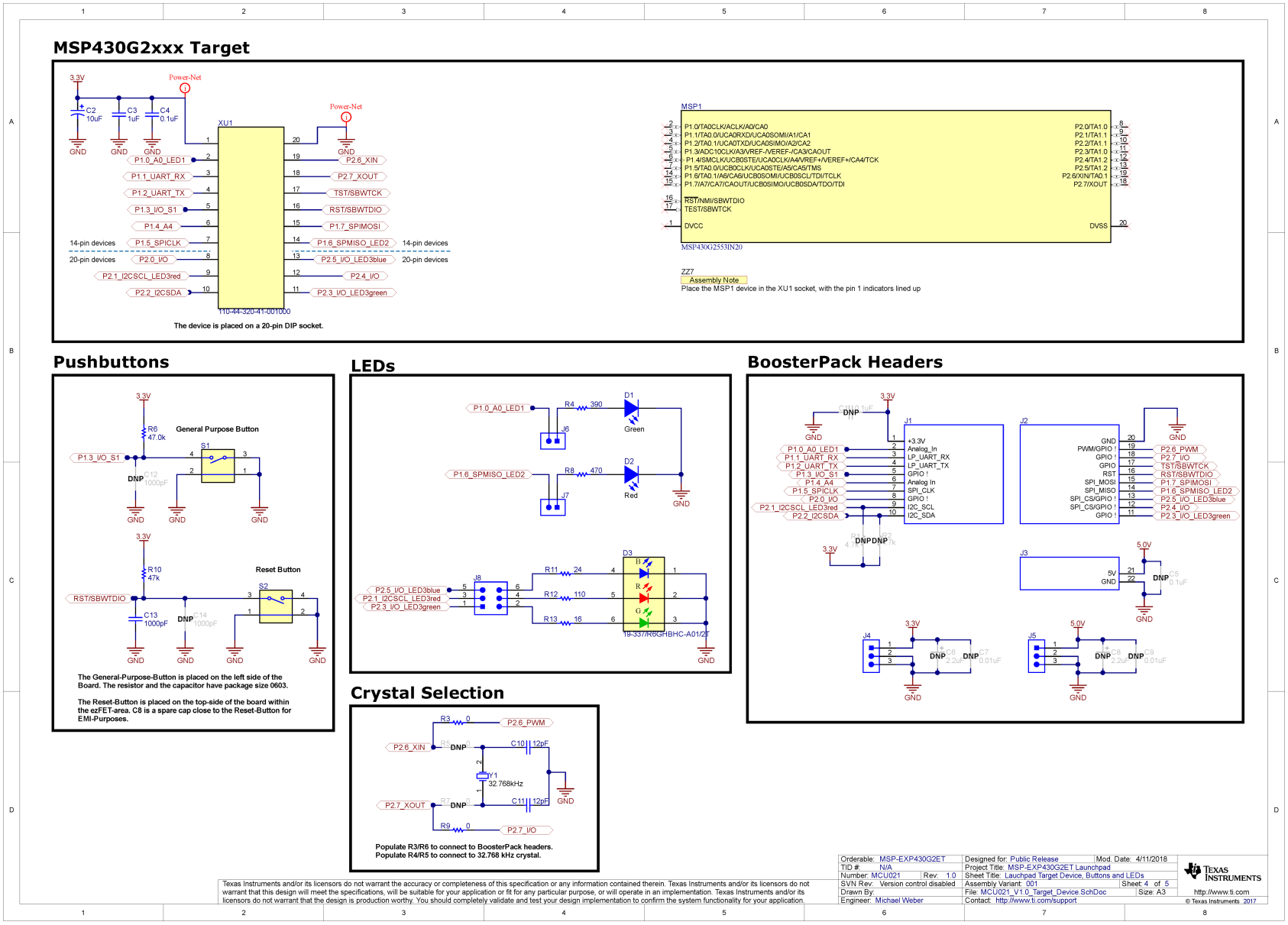

Figure 19. Schematics (3 of 3)

Copyright © 2018–2020, Texas Instruments Incorporated

Revision History

NOTE: Page numbers for previous revisions may differ from page numbers in the current version.

Changes from May 1, 2018 to March 20, 2020 (from * Revision (20180501) to A Revision)	Page
• Added a Note to Section 2.2.4	10
• Removed all mentions of 16 or 24 Capacitive-Touch Enabled I/O Pins	14

Copyright © 2018–2020, Texas Instruments Incorporated

STANDARD TERMS FOR EVALUATION MODULES

1. *Delivery:* TI delivers TI evaluation boards, kits, or modules, including any accompanying demonstration software, components, and/or documentation which may be provided together or separately (collectively, an "EVM" or "EVMs") to the User ("User") in accordance with the terms set forth herein. User's acceptance of the EVM is expressly subject to the following terms.

   1.1 EVMs are intended solely for product or software developers for use in a research and development setting to facilitate feasibility evaluation, experimentation, or scientific analysis of TI semiconductors products. EVMs have no direct function and are not finished products. EVMs shall not be directly or indirectly assembled as a part or subassembly in any finished product. For clarification, any software or software tools provided with the EVM ("Software") shall not be subject to the terms and conditions set forth herein but rather shall be subject to the applicable terms that accompany such Software

   1.2 EVMs are not intended for consumer or household use. EVMs may not be sold, sublicensed, leased, rented, loaned, assigned, or otherwise distributed for commercial purposes by Users, in whole or in part, or used in any finished product or production system.

2 *Limited Warranty and Related Remedies/Disclaimers*:

   2.1 These terms do not apply to Software. The warranty, if any, for Software is covered in the applicable Software License Agreement.

   2.2 TI warrants that the TI EVM will conform to TI's published specifications for ninety (90) days after the date TI delivers such EVM to User. Notwithstanding the foregoing, TI shall not be liable for a nonconforming EVM if (a) the nonconformity was caused by neglect, misuse or mistreatment by an entity other than TI, including improper installation or testing, or for any EVMs that have been altered or modified in any way by an entity other than TI, (b) the nonconformity resulted from User's design, specifications or instructions for such EVMs or improper system design, or (c) User has not paid on time. Testing and other quality control techniques are used to the extent TI deems necessary. TI does not test all parameters of each EVM. User's claims against TI under this Section 2 are void if User fails to notify TI of any apparent defects in the EVMs within ten (10) business days after delivery, or of any hidden defects with ten (10) business days after the defect has been detected.

   2.3 TI's sole liability shall be at its option to repair or replace EVMs that fail to conform to the warranty set forth above, or credit User's account for such EVM. TI's liability under this warranty shall be limited to EVMs that are returned during the warranty period to the address designated by TI and that are determined by TI not to conform to such warranty. If TI elects to repair or replace such EVM, TI shall have a reasonable time to repair such EVM or provide replacements. Repaired EVMs shall be warranted for the remainder of the original warranty period. Replaced EVMs shall be warranted for a new full ninety (90) day warranty period.

WARNING

Evaluation Kits are intended solely for use by technically qualified, professional electronics experts who are familiar with the dangers and application risks associated with handling electrical mechanical components, systems, and subsystems.

User shall operate the Evaluation Kit within TI's recommended guidelines and any applicable legal or environmental requirements as well as reasonable and customary safeguards. Failure to set up and/or operate the Evaluation Kit within TI's recommended guidelines may result in personal injury or death or property damage. Proper set up entails following TI's instructions for electrical ratings of interface circuits such as input, output and electrical loads.

NOTE:

EXPOSURE TO ELECTROSTATIC DISCHARGE (ESD) MAY CAUSE DEGREDATION OR FAILURE OF THE EVALUATION KIT; TI RECOMMENDS STORAGE OF THE EVALUATION KIT IN A PROTECTIVE ESD BAG.

3 *Regulatory Notices:*

3.1 *United States*

3.1.1 *Notice applicable to EVMs not FCC-Approved:*

FCC NOTICE: This kit is designed to allow product developers to evaluate electronic components, circuitry, or software associated with the kit to determine whether to incorporate such items in a finished product and software developers to write software applications for use with the end product. This kit is not a finished product and when assembled may not be resold or otherwise marketed unless all required FCC equipment authorizations are first obtained. Operation is subject to the condition that this product not cause harmful interference to licensed radio stations and that this product accept harmful interference. Unless the assembled kit is designed to operate under part 15, part 18 or part 95 of this chapter, the operator of the kit must operate under the authority of an FCC license holder or must secure an experimental authorization under part 5 of this chapter.

3.1.2 *For EVMs annotated as FCC – FEDERAL COMMUNICATIONS COMMISSION Part 15 Compliant:*

CAUTION

This device complies with part 15 of the FCC Rules. Operation is subject to the following two conditions: (1) This device may not cause harmful interference, and (2) this device must accept any interference received, including interference that may cause undesired operation.

Changes or modifications not expressly approved by the party responsible for compliance could void the user's authority to operate the equipment.

FCC Interference Statement for Class A EVM devices

NOTE: This equipment has been tested and found to comply with the limits for a Class A digital device, pursuant to part 15 of the FCC Rules. These limits are designed to provide reasonable protection against harmful interference when the equipment is operated in a commercial environment. This equipment generates, uses, and can radiate radio frequency energy and, if not installed and used in accordance with the instruction manual, may cause harmful interference to radio communications. Operation of this equipment in a residential area is likely to cause harmful interference in which case the user will be required to correct the interference at his own expense.

FCC Interference Statement for Class B EVM devices

NOTE: This equipment has been tested and found to comply with the limits for a Class B digital device, pursuant to part 15 of the FCC Rules. These limits are designed to provide reasonable protection against harmful interference in a residential installation. This equipment generates, uses and can radiate radio frequency energy and, if not installed and used in accordance with the instructions, may cause harmful interference to radio communications. However, there is no guarantee that interference will not occur in a particular installation. If this equipment does cause harmful interference to radio or television reception, which can be determined by turning the equipment off and on, the user is encouraged to try to correct the interference by one or more of the following measures:

- *Reorient or relocate the receiving antenna.*
- *Increase the separation between the equipment and receiver.*
- *Connect the equipment into an outlet on a circuit different from that to which the receiver is connected.*
- *Consult the dealer or an experienced radio/TV technician for help.*

3.2 *Canada*

3.2.1 *For EVMs issued with an Industry Canada Certificate of Conformance to RSS-210 or RSS-247*

Concerning EVMs Including Radio Transmitters:

This device complies with Industry Canada license-exempt RSSs. Operation is subject to the following two conditions:

(1) this device may not cause interference, and (2) this device must accept any interference, including interference that may cause undesired operation of the device.

Concernant les EVMs avec appareils radio:

Le présent appareil est conforme aux CNR d'Industrie Canada applicables aux appareils radio exempts de licence. L'exploitation est autorisée aux deux conditions suivantes: (1) l'appareil ne doit pas produire de brouillage, et (2) l'utilisateur de l'appareil doit accepter tout brouillage radioélectrique subi, même si le brouillage est susceptible d'en compromettre le fonctionnement.

Concerning EVMs Including Detachable Antennas:

Under Industry Canada regulations, this radio transmitter may only operate using an antenna of a type and maximum (or lesser) gain approved for the transmitter by Industry Canada. To reduce potential radio interference to other users, the antenna type and its gain should be so chosen that the equivalent isotropically radiated power (e.i.r.p.) is not more than that necessary for successful communication. This radio transmitter has been approved by Industry Canada to operate with the antenna types listed in the user guide with the maximum permissible gain and required antenna impedance for each antenna type indicated. Antenna types not included in this list, having a gain greater than the maximum gain indicated for that type, are strictly prohibited for use with this device.

Concernant les EVMs avec antennes détachables

Conformément à la réglementation d'Industrie Canada, le présent émetteur radio peut fonctionner avec une antenne d'un type et d'un gain maximal (ou inférieur) approuvé pour l'émetteur par Industrie Canada. Dans le but de réduire les risques de brouillage radioélectrique à l'intention des autres utilisateurs, il faut choisir le type d'antenne et son gain de sorte que la puissance isotrope rayonnée équivalente (p.i.r.e.) ne dépasse pas l'intensité nécessaire à l'établissement d'une communication satisfaisante. Le présent émetteur radio a été approuvé par Industrie Canada pour fonctionner avec les types d'antenne énumérés dans le manuel d'usage et ayant un gain admissible maximal et l'impédance requise pour chaque type d'antenne. Les types d'antenne non inclus dans cette liste, ou dont le gain est supérieur au gain maximal indiqué, sont strictement interdits pour l'exploitation de l'émetteur

3.3 *Japan*

3.3.1 *Notice for EVMs delivered in Japan:* Please see http://www.tij.co.jp/lsds/ti_ja/general/eStore/notice_01.page 日本国内に輸入される評価用キット、ボードについては、次のところをご覧ください。
http://www.tij.co.jp/lsds/ti_ja/general/eStore/notice_01.page

3.3.2 *Notice for Users of EVMs Considered "Radio Frequency Products" in Japan:* EVMs entering Japan may not be certified by TI as conforming to Technical Regulations of Radio Law of Japan.

If User uses EVMs in Japan, not certified to Technical Regulations of Radio Law of Japan, User is required to follow the instructions set forth by Radio Law of Japan, which includes, but is not limited to, the instructions below with respect to EVMs (which for the avoidance of doubt are stated strictly for convenience and should be verified by User):

1. Use EVMs in a shielded room or any other test facility as defined in the notification #173 issued by Ministry of Internal Affairs and Communications on March 28, 2006, based on Sub-section 1.1 of Article 6 of the Ministry's Rule for Enforcement of Radio Law of Japan,
2. Use EVMs only after User obtains the license of Test Radio Station as provided in Radio Law of Japan with respect to EVMs, or
3. Use of EVMs only after User obtains the Technical Regulations Conformity Certification as provided in Radio Law of Japan with respect to EVMs. Also, do not transfer EVMs, unless User gives the same notice above to the transferee. Please note that if User does not follow the instructions above, User will be subject to penalties of Radio Law of Japan.

【無線電波を送信する製品の開発キットをお使いになる際の注意事項】 開発キットの中には技術基準適合証明を受けていないものがあります。 技術適合証明を受けていないもののご使用に際しては、電波法遵守のため、以下のいずれかの措置を取っていただく必要がありますのでご注意ください。

1. 電波法施行規則第6条第1項第1号に基づく平成18年3月28日総務省告示第173号で定められた電波暗室等の試験設備でご使用いただく。
2. 実験局の免許を取得後ご使用いただく。
3. 技術基準適合証明を取得後ご使用いただく。

なお、本製品は、上記の「ご使用にあたっての注意」を譲渡先、移転先に通知しない限り、譲渡、移転できないものとします。
上記を遵守頂けない場合は、電波法の罰則が適用される可能性があることをご留意ください。 日本テキサス・インスツルメンツ株式会社
東京都新宿区西新宿６丁目２４番１号
西新宿三井ビル

3.3.3 *Notice for EVMs for Power Line Communication:* Please see http://www.tij.co.jp/lsds/ti_ja/general/eStore/notice_02.page
電力線搬送波通信についての開発キットをお使いになる際の注意事項については、次のところをご覧ください。http://www.tij.co.jp/lsds/ti_ja/general/eStore/notice_02.page

3.4 *European Union*

3.4.1 *For EVMs subject to EU Directive 2014/30/EU (Electromagnetic Compatibility Directive)*:

This is a class A product intended for use in environments other than domestic environments that are connected to a low-voltage power-supply network that supplies buildings used for domestic purposes. In a domestic environment this product may cause radio interference in which case the user may be required to take adequate measures.

4 *EVM Use Restrictions and Warnings:*

4.1 EVMS ARE NOT FOR USE IN FUNCTIONAL SAFETY AND/OR SAFETY CRITICAL EVALUATIONS, INCLUDING BUT NOT LIMITED TO EVALUATIONS OF LIFE SUPPORT APPLICATIONS.

4.2 User must read and apply the user guide and other available documentation provided by TI regarding the EVM prior to handling or using the EVM, including without limitation any warning or restriction notices. The notices contain important safety information related to, for example, temperatures and voltages.

4.3 *Safety-Related Warnings and Restrictions:*

4.3.1 User shall operate the EVM within TI's recommended specifications and environmental considerations stated in the user guide, other available documentation provided by TI, and any other applicable requirements and employ reasonable and customary safeguards. Exceeding the specified performance ratings and specifications (including but not limited to input and output voltage, current, power, and environmental ranges) for the EVM may cause personal injury or death, or property damage. If there are questions concerning performance ratings and specifications, User should contact a TI field representative prior to connecting interface electronics including input power and intended loads. Any loads applied outside of the specified output range may also result in unintended and/or inaccurate operation and/or possible permanent damage to the EVM and/or interface electronics. Please consult the EVM user guide prior to connecting any load to the EVM output. If there is uncertainty as to the load specification, please contact a TI field representative. During normal operation, even with the inputs and outputs kept within the specified allowable ranges, some circuit components may have elevated case temperatures. These components include but are not limited to linear regulators, switching transistors, pass transistors, current sense resistors, and heat sinks, which can be identified using the information in the associated documentation. When working with the EVM, please be aware that the EVM may become very warm.

4.3.2 EVMs are intended solely for use by technically qualified, professional electronics experts who are familiar with the dangers and application risks associated with handling electrical mechanical components, systems, and subsystems. User assumes all responsibility and liability for proper and safe handling and use of the EVM by User or its employees, affiliates, contractors or designees. User assumes all responsibility and liability to ensure that any interfaces (electronic and/or mechanical) between the EVM and any human body are designed with suitable isolation and means to safely limit accessible leakage currents to minimize the risk of electrical shock hazard. User assumes all responsibility and liability for any improper or unsafe handling or use of the EVM by User or its employees, affiliates, contractors or designees.

4.4 User assumes all responsibility and liability to determine whether the EVM is subject to any applicable international, federal, state, or local laws and regulations related to User's handling and use of the EVM and, if applicable, User assumes all responsibility and liability for compliance in all respects with such laws and regulations. User assumes all responsibility and liability for proper disposal and recycling of the EVM consistent with all applicable international, federal, state, and local requirements.

5. *Accuracy of Information:* To the extent TI provides information on the availability and function of EVMs, TI attempts to be as accurate as possible. However, TI does not warrant the accuracy of EVM descriptions, EVM availability or other information on its websites as accurate, complete, reliable, current, or error-free.

6. *Disclaimers:*

6.1 EXCEPT AS SET FORTH ABOVE, EVMS AND ANY MATERIALS PROVIDED WITH THE EVM (INCLUDING, BUT NOT LIMITED TO, REFERENCE DESIGNS AND THE DESIGN OF THE EVM ITSELF) ARE PROVIDED "AS IS" AND "WITH ALL FAULTS." TI DISCLAIMS ALL OTHER WARRANTIES, EXPRESS OR IMPLIED, REGARDING SUCH ITEMS, INCLUDING BUT NOT LIMITED TO ANY EPIDEMIC FAILURE WARRANTY OR IMPLIED WARRANTIES OF MERCHANTABILITY OR FITNESS FOR A PARTICULAR PURPOSE OR NON-INFRINGEMENT OF ANY THIRD PARTY PATENTS, COPYRIGHTS, TRADE SECRETS OR OTHER INTELLECTUAL PROPERTY RIGHTS.

6.2 EXCEPT FOR THE LIMITED RIGHT TO USE THE EVM SET FORTH HEREIN, NOTHING IN THESE TERMS SHALL BE CONSTRUED AS GRANTING OR CONFERRING ANY RIGHTS BY LICENSE, PATENT, OR ANY OTHER INDUSTRIAL OR INTELLECTUAL PROPERTY RIGHT OF TI, ITS SUPPLIERS/LICENSORS OR ANY OTHER THIRD PARTY, TO USE THE EVM IN ANY FINISHED END-USER OR READY-TO-USE FINAL PRODUCT, OR FOR ANY INVENTION, DISCOVERY OR IMPROVEMENT, REGARDLESS OF WHEN MADE, CONCEIVED OR ACQUIRED.

7. *USER'S INDEMNITY OBLIGATIONS AND REPRESENTATIONS.* USER WILL DEFEND, INDEMNIFY AND HOLD TI, ITS LICENSORS AND THEIR REPRESENTATIVES HARMLESS FROM AND AGAINST ANY AND ALL CLAIMS, DAMAGES, LOSSES, EXPENSES, COSTS AND LIABILITIES (COLLECTIVELY, "CLAIMS") ARISING OUT OF OR IN CONNECTION WITH ANY HANDLING OR USE OF THE EVM THAT IS NOT IN ACCORDANCE WITH THESE TERMS. THIS OBLIGATION SHALL APPLY WHETHER CLAIMS ARISE UNDER STATUTE, REGULATION, OR THE LAW OF TORT, CONTRACT OR ANY OTHER LEGAL THEORY, AND EVEN IF THE EVM FAILS TO PERFORM AS DESCRIBED OR EXPECTED.

8. *Limitations on Damages and Liability:*

   8.1 *General Limitations*. IN NO EVENT SHALL TI BE LIABLE FOR ANY SPECIAL, COLLATERAL, INDIRECT, PUNITIVE, INCIDENTAL, CONSEQUENTIAL, OR EXEMPLARY DAMAGES IN CONNECTION WITH OR ARISING OUT OF THESE TERMS OR THE USE OF THE EVMS , REGARDLESS OF WHETHER TI HAS BEEN ADVISED OF THE POSSIBILITY OF SUCH DAMAGES. EXCLUDED DAMAGES INCLUDE, BUT ARE NOT LIMITED TO, COST OF REMOVAL OR REINSTALLATION, ANCILLARY COSTS TO THE PROCUREMENT OF SUBSTITUTE GOODS OR SERVICES, RETESTING, OUTSIDE COMPUTER TIME, LABOR COSTS, LOSS OF GOODWILL, LOSS OF PROFITS, LOSS OF SAVINGS, LOSS OF USE, LOSS OF DATA, OR BUSINESS INTERRUPTION. NO CLAIM, SUIT OR ACTION SHALL BE BROUGHT AGAINST TI MORE THAN TWELVE (12) MONTHS AFTER THE EVENT THAT GAVE RISE TO THE CAUSE OF ACTION HAS OCCURRED.

   8.2 *Specific Limitations.* IN NO EVENT SHALL TI'S AGGREGATE LIABILITY FROM ANY USE OF AN EVM PROVIDED HEREUNDER, INCLUDING FROM ANY WARRANTY, INDEMITY OR OTHER OBLIGATION ARISING OUT OF OR IN CONNECTION WITH THESE TERMS, , EXCEED THE TOTAL AMOUNT PAID TO TI BY USER FOR THE PARTICULAR EVM(S) AT ISSUE DURING THE PRIOR TWELVE (12) MONTHS WITH RESPECT TO WHICH LOSSES OR DAMAGES ARE CLAIMED. THE EXISTENCE OF MORE THAN ONE CLAIM SHALL NOT ENLARGE OR EXTEND THIS LIMIT.

9. *Return Policy*. Except as otherwise provided, TI does not offer any refunds, returns, or exchanges. Furthermore, no return of EVM(s) will be accepted if the package has been opened and no return of the EVM(s) will be accepted if they are damaged or otherwise not in a resalable condition. If User feels it has been incorrectly charged for the EVM(s) it ordered or that delivery violates the applicable order, User should contact TI. All refunds will be made in full within thirty (30) working days from the return of the components(s), excluding any postage or packaging costs.

10. *Governing Law:* These terms and conditions shall be governed by and interpreted in accordance with the laws of the State of Texas, without reference to conflict-of-laws principles. User agrees that non-exclusive jurisdiction for any dispute arising out of or relating to these terms and conditions lies within courts located in the State of Texas and consents to venue in Dallas County, Texas. Notwithstanding the foregoing, any judgment may be enforced in any United States or foreign court, and TI may seek injunctive relief in any United States or foreign court.

Mailing Address: Texas Instruments, Post Office Box 655303, Dallas, Texas 75265
Copyright © 2019, Texas Instruments Incorporated

IMPORTANT NOTICE AND DISCLAIMER

TI PROVIDES TECHNICAL AND RELIABILITY DATA (INCLUDING DATASHEETS), DESIGN RESOURCES (INCLUDING REFERENCE DESIGNS), APPLICATION OR OTHER DESIGN ADVICE, WEB TOOLS, SAFETY INFORMATION, AND OTHER RESOURCES “AS IS” AND WITH ALL FAULTS, AND DISCLAIMS ALL WARRANTIES, EXPRESS AND IMPLIED, INCLUDING WITHOUT LIMITATION ANY IMPLIED WARRANTIES OF MERCHANTABILITY, FITNESS FOR A PARTICULAR PURPOSE OR NON-INFRINGEMENT OF THIRD PARTY INTELLECTUAL PROPERTY RIGHTS.

These resources are intended for skilled developers designing with TI products. You are solely responsible for (1) selecting the appropriate TI products for your application, (2) designing, validating and testing your application, and (3) ensuring your application meets applicable standards, and any other safety, security, or other requirements. These resources are subject to change without notice. TI grants you permission to use these resources only for development of an application that uses the TI products described in the resource. Other reproduction and display of these resources is prohibited. No license is granted to any other TI intellectual property right or to any third party intellectual property right. TI disclaims responsibility for, and you will fully indemnify TI and its representatives against, any claims, damages, costs, losses, and liabilities arising out of your use of these resources.

TI’s products are provided subject to TI’s Terms of Sale (www.ti.com/legal/termsofsale.html) or other applicable terms available either on ti.com or provided in conjunction with such TI products. TI’s provision of these resources does not expand or otherwise alter TI’s applicable warranties or warranty disclaimers for TI products.

Mailing Address: Texas Instruments, Post Office Box 655303, Dallas, Texas 75265
Copyright © 2020, Texas Instruments Incorporated

ESP8266-PROG

Help for the programming and use of a ESP8266

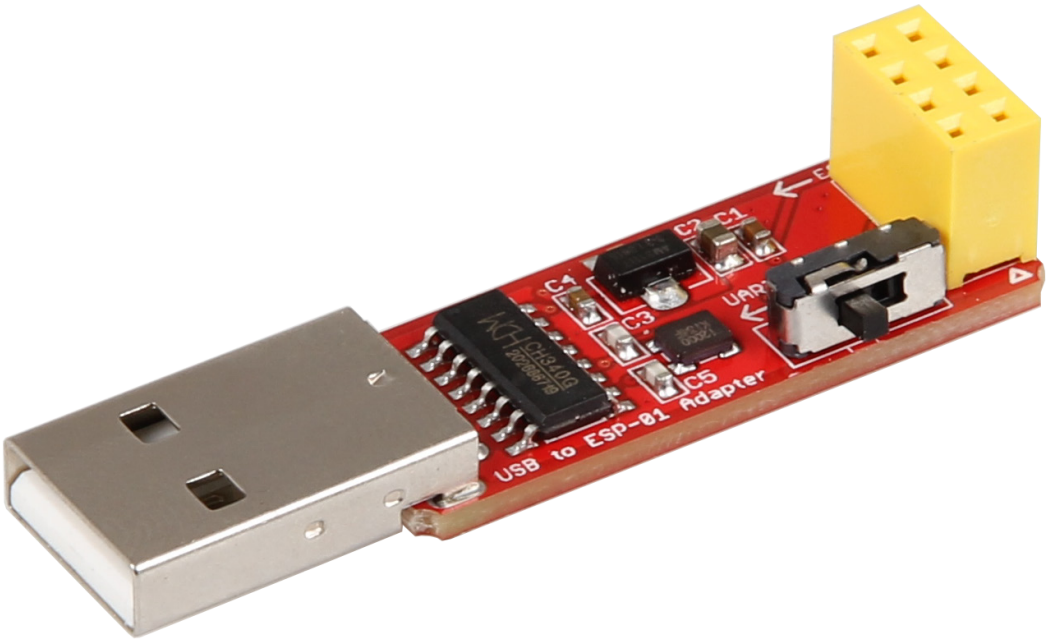

1. GENERAL INFORMATION

Dear customer,

thank you for choosing our product. In the following, we will show what you should note at the commissioning and during the usage.

Should you encounter any unexpected problems during use, please do not hesitate to contact us.

2.CONFIGURATION OF SOFTWARE ENVIRONMENT

First of all, you must prepare the Arduino development environment for the use with the ESP8266.
For that, enter in the global settings of the program the following URL as an **additional board manager URL:**

https://arduino.esp8266.com/stable/package_esp8266com_index.json

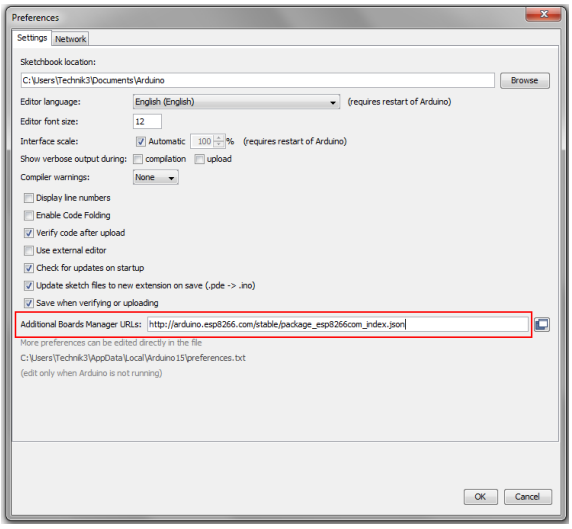

After that, the additional board library must be installed. For that open the board manager and install the **ESP8266**-library.

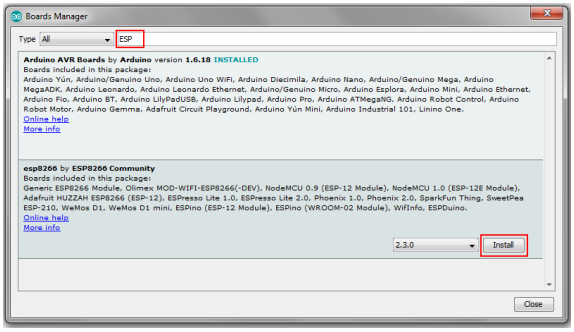

As soon as the board is successfully installed, you can select the **Generic ESP8266 Module** in the list of available boards.

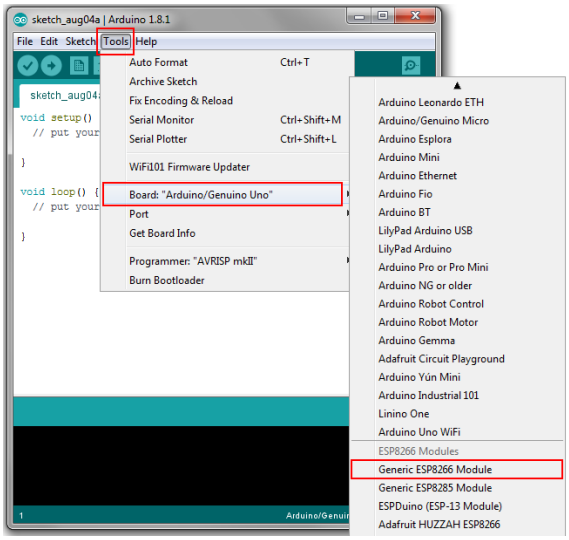

Your Arduino development environment is now ready for the use with the ESP8266.

3. CONNECTION & PROGRAMMING OF ESP8266

Put now the ESP8266 in the yellow connector of the programming module like shown in the picture.

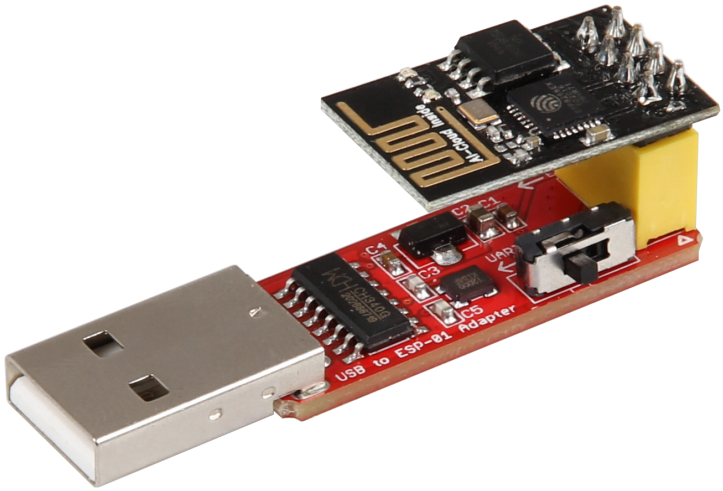

Next to the yellow connector is a small switch (also shown in the picture). Note that the switch should be on **Prog** if you want to program your ESP8266. For the regular use, you must set the switch to **UART**.

Connect the programming module with the USB-interface of your computer.

If the automatic installation of drivers fails, you have to install the drivers manually.

In this case download the **driver installation program** and install the drivers. Note that the accurate port is selected in the Arduino settings.

The in the Arduino environment installed ESP-package provides some code examples for the use of this module. These examples are highly qualified for the entering into the programming of the ESP8266.

4. FURTHER INFORMATION

Our information and redemption obligation according to the electro-law (ElektroG)

Symbol on electrial and electronic products :
This crossed-out bin means that electrical and electronic products do **not** belong into the household waste. You must hand over your old appli-ance to a registration office. Before you can hand over the old appliance, you must remove used batteries and accumulators which are not enclosed by the device.

Return options :
As the end user, you can hand over with the purchase of a new device your old appliance (which has essentially the same functions as the new one) free of charge for disposal. Small devices which do not have outer dimensions greater than 25 cm can be submitted independently of the purchase of a new product in normal household quantities.

Possibility of restitution at our company location during our opening hours :
Simac GmbH, Pascalstr. 8, D-47506 Neukirchen-Vluyn

Possibility of restitution nearby :
We send you a parcel stamp with which you can send us your old appliance free of charge. For this possibility, you must contact us via e-mail at service@joy-it.net or via telephone.

Information about packaging:
Please package your old appliance safe during transport. Should you not have a suitable packaging material or you do not want to use your own material, you can contact us and we will send you an appropriate package.

5. SUPPORT

If any questions remain open or problems arise after your purchase, we are available by e-mail, telephone and with a ticket support system to answer these.

E-Mail: service@joy-it.net
Ticket-System: http://support.joy-it.net
Telephone: +49 (0)2845 98469 – 66 (10 - 17 o‘clock)

For further information visit our website:
www.joy-it.net

Published: 28.08.2019

Raspberry Pi 3 Model B+

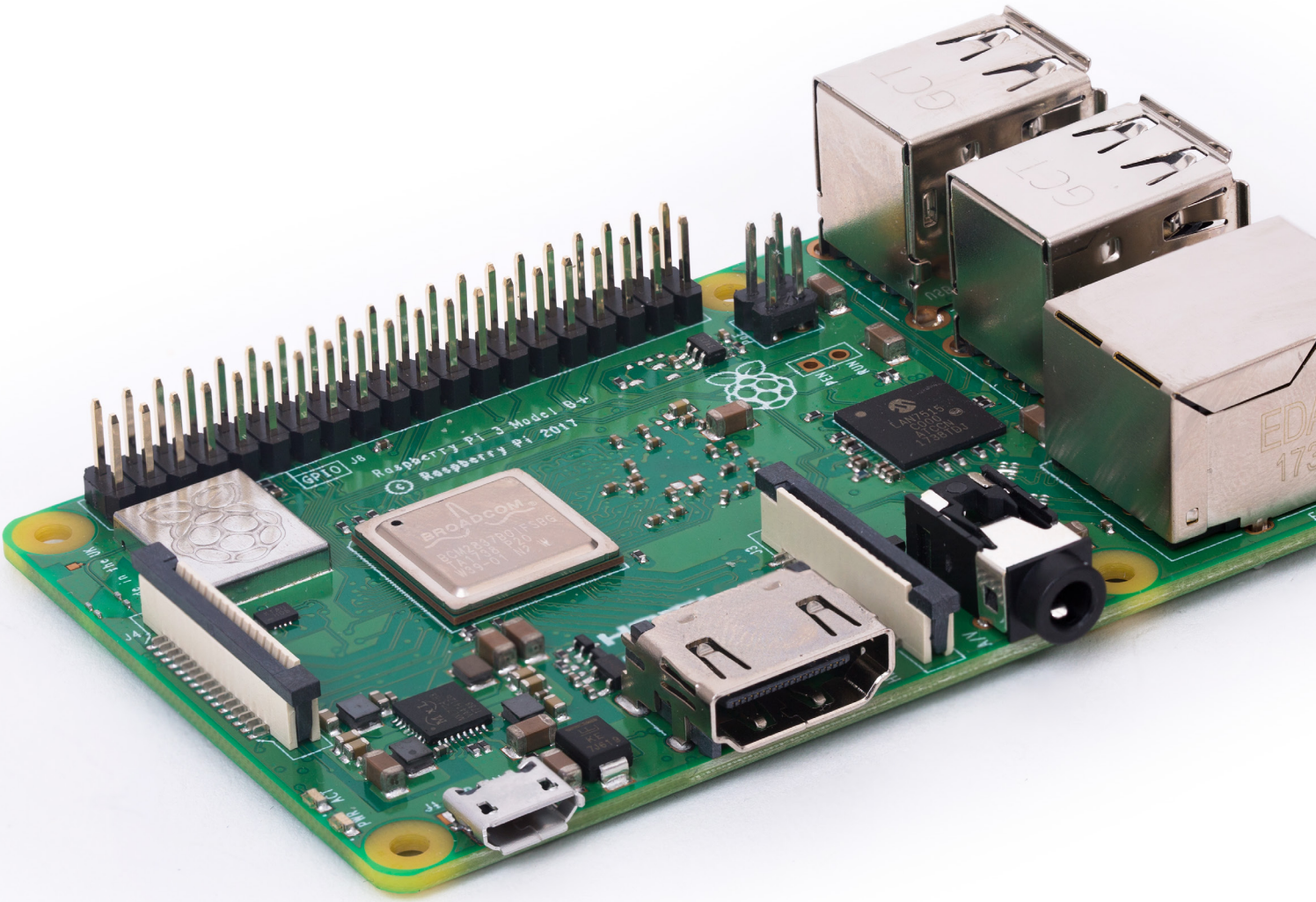

Overview

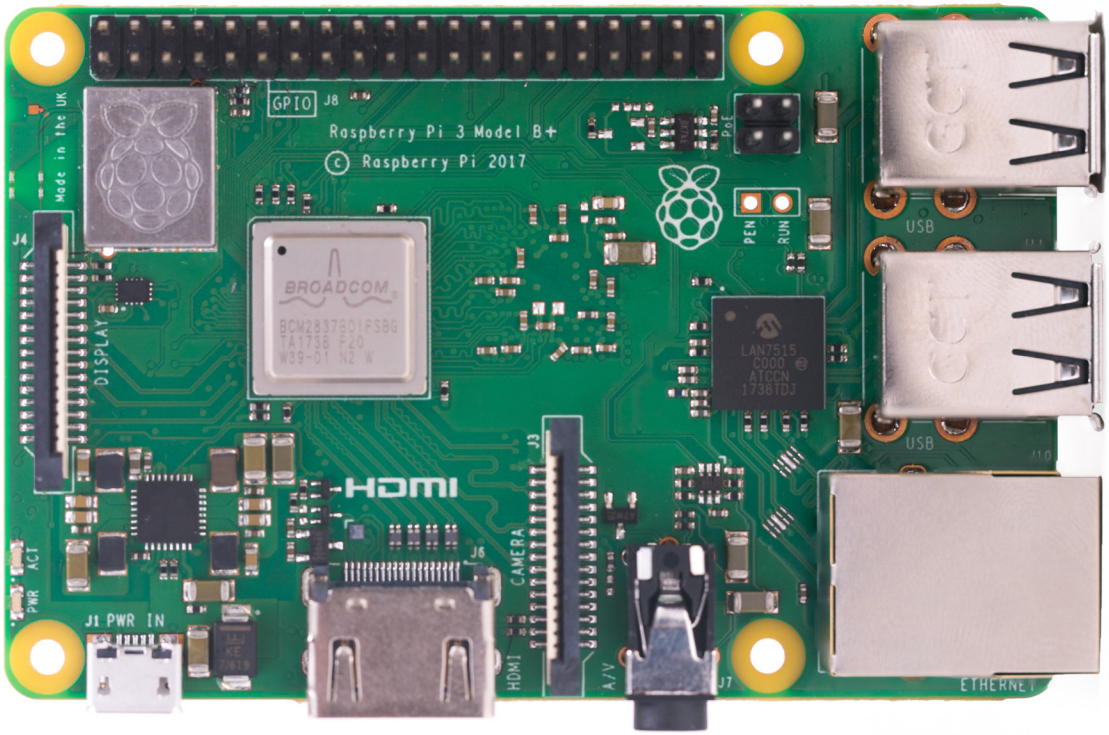

The Raspberry Pi 3 Model B+ is the latest product in the Raspberry Pi 3 range, boasting a 64-bit quad core processor running at 1.4 GHz, dual-band 2.4 GHz and 5 GHz wireless LAN, Bluetooth 4.2/BLE, faster Ethernet, and PoE capability via a separate PoE HAT

The dual-band wireless LAN comes with modular compliance certification, allowing the board to be designed into end products with significantly reduced wireless LAN compliance testing, improving both cost and time to market.

The Raspberry Pi 3 Model B+ maintains the same mechanical footprint as both the Raspberry Pi 2 Model B and the Raspberry Pi 3 Model B.

Specifications

Processor:	Broadcom BCM2837B0, Cortex-A53 64-bit SoC @ 1.4 GHz
Memory:	1GB LPDDR2 SDRAM
Connectivity:	■ 2.4 GHz and 5 GHz IEEE 802.11.b/g/n/ac wireless LAN, Bluetooth 4.2, BLE ■ Gigabit Ethernet over USB 2.0 (maximum throughput 300 Mbps) ■ 4 × USB 2.0 ports
Access:	Extended 40-pin GPIO header
Video & sound:	■ 1 × full size HDMI ■ MIPI DSI display port ■ MIPI CSI camera port ■ 4 pole stereo output and composite video port
Multimedia:	H.264, MPEG-4 decode (1080p30); H.264 encode (1080p30); OpenGL ES 1.1, 2.0 graphics
SD card support:	Micro SD format for loading operating system and data storage
Input power:	■ 5 V/2.5 A DC via micro USB connector ■ 5 V DC via GPIO header ■ Power over Ethernet (PoE)–enabled (requires separate PoE HAT)
Environment:	Operating temperature, 0–50 °C
Compliance:	For a full list of local and regional product approvals, please visit www.raspberrypi.org/products/raspberry-pi-3-model-b+
Production lifetime:	The Raspberry Pi 3 Model B+ will remain in production until at least January 2023.

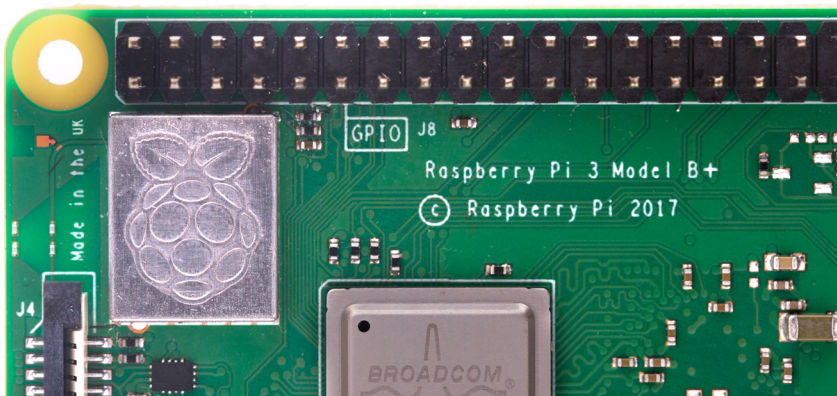

Physical specifications

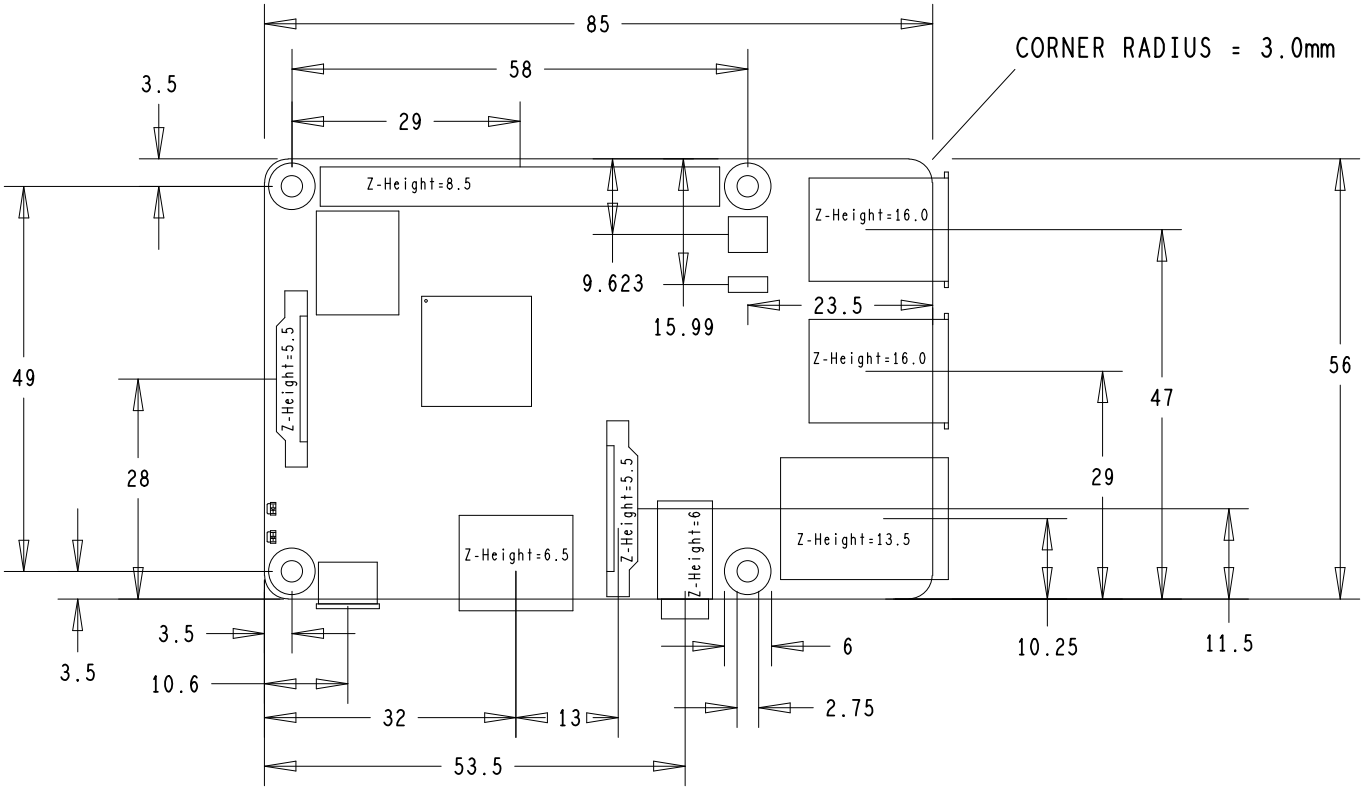

Warnings

- This product should only be connected to an external power supply rated at 5 V/2.5 A DC. Any external power supply used with the Raspberry Pi 3 Model B+ shall comply with relevant regulations and standards applicable in the country of intended use.
- This product should be operated in a well-ventilated environment and, if used inside a case, the case should not be covered.
- Whilst in use, this product should be placed on a stable, flat, non-conductive surface and should not be contacted by conductive items.
- The connection of incompatible devices to the GPIO connection may affect compliance, result in damage to the unit, and invalidate the warranty.
- All peripherals used with this product should comply with relevant standards for the country of use and be marked accordingly to ensure that safety and performance requirements are met. These articles include but are not limited to keyboards, monitors, and mice when used in conjunction with the Raspberry Pi.
- The cables and connectors of all peripherals used with this product must have adequate insulation so that relevant safety requirements are met.

Safety instructions

To avoid malfunction of or damage to this product, please observe the following:

- Do not expose to water or moisture, or place on a conductive surface whilst in operation.
- Do not expose to heat from any source; the Raspberry Pi 3 Model B+ is designed for reliable operation at normal ambient temperatures.
- Take care whilst handling to avoid mechanical or electrical damage to the printed circuit board and connectors.
- Whilst it is powered, avoid handling the printed circuit board, or only handle it by the edges to minimise the risk of electrostatic discharge damage.

Raspberry Pi

HDMI is a trademark of HDMI Licensing, LLC
Raspberry Pi is a trademark of the Raspberry Pi Foundation

LM1577/LM2577 SIMPLE SWITCHER® Step-Up Voltage Regulator

Check for Samples: LM1577, LM2577

FEATURES

- **Requires Few External Components**
- **NPN Output Switches 3.0A, can Stand off 65V**
- **Wide Input Voltage Range: 3.5V to 40V**
- **Current-mode Operation for Improved Transient Response, Line Regulation, and Current Limit**
- **52 kHz Internal Oscillator**
- **Soft-start Function Reduces In-rush Current During Start-up**
- **Output Switch Protected by Current Limit, Under-voltage Lockout, and Thermal Shutdown**

TYPICAL APPLICATIONS

- **Simple Boost Regulator**
- **Flyback and Forward Regulators**
- **Multiple-output Regulator**

DESCRIPTION

The LM1577/LM2577 are monolithic integrated circuits that provide all of the power and control functions for step-up (boost), flyback, and forward converter switching regulators. The device is available in three different output voltage versions: 12V, 15V, and adjustable.

Requiring a minimum number of external components, these regulators are cost effective, and simple to use. Listed in this data sheet are a family of standard inductors and flyback transformers designed to work with these switching regulators.

Included on the chip is a 3.0A NPN switch and its associated protection circuitry, consisting of current and thermal limiting, and undervoltage lockout. Other features include a 52 kHz fixed-frequency oscillator that requires no external components, a soft start mode to reduce in-rush current during start-up, and current mode control for improved rejection of input voltage and output load transients.

Connection Diagrams

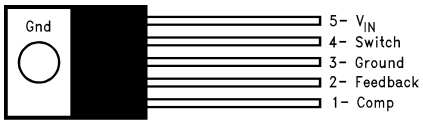

Figure 1. 5-Lead (Straight Leads) TO-220 (T) – Top View
See Package Number KC

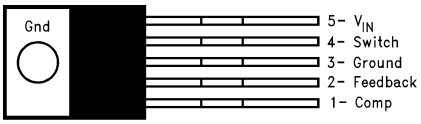

Figure 2. 5-Lead (Bent, Staggered Leads) TO-220 (T) – Top View
See Package Number NDH0005D

Please be aware that an important notice concerning availability, standard warranty, and use in critical applications of Texas Instruments semiconductor products and disclaimers thereto appears at the end of this data sheet.

SIMPLE SWITCHER is a registered trademark of Texas Instruments.
All other trademarks are the property of their respective owners.

PRODUCTION DATA information is current as of publication date. Products conform to specifications per the terms of the Texas Instruments standard warranty. Production processing does not necessarily include testing of all parameters.

Copyright © 1999–2013, Texas Instruments Incorporated

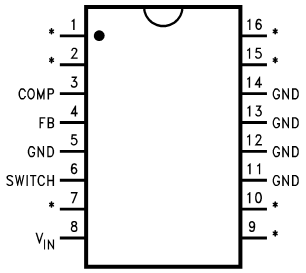

*No Internal Connection

Figure 3. 16-Lead PDIP (N) – Top View
See Package Number NBG0016G

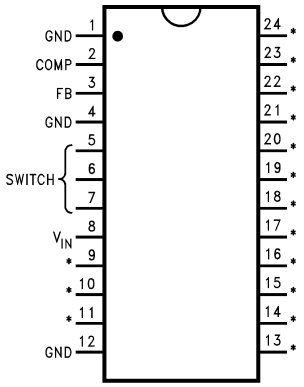

*No internal Connection

Figure 4. 24-Lead SOIC Package (M) – Top View
See Package Number DW

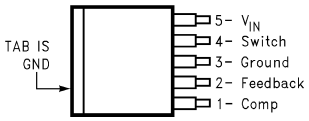

Figure 5. 5-Lead DDPAK/TO-263 (S) SFM Package – Top View
See Package Number KTT0005B

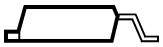

Figure 6. 5-Lead DDPAK/TO-263 (S) SFM Package – Side View

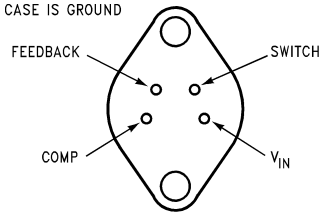

Figure 7. 4-Lead TO-220 (K) – Bottom View
See Package Number NEB0005B

Typical Application

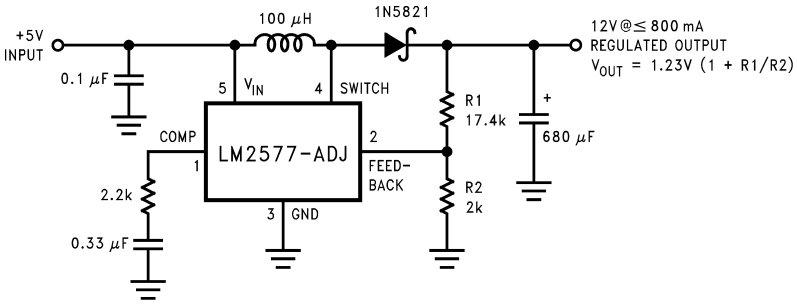

Note: Pin numbers shown are for TO-220 (T) package.

These devices have limited built-in ESD protection. The leads should be shorted together or the device placed in conductive foam during storage or handling to prevent electrostatic damage to the MOS gates.

Copyright © 1999–2013, Texas Instruments Incorporated

Absolute Maximum Ratings[1][2]

Supply Voltage		45V
Output Switch Voltage		65V
Output Switch Current[3]		6.0A
Power Dissipation		Internally Limited
Storage Temperature Range		−65°C to +150°C
Lead Temperature	Soldering, 10 sec.	260°C
Maximum Junction Temperature		150°C
Minimum ESD Rating	C = 100 pF, R = 1.5 kΩ	2 kV

(1) Absolute Maximum Ratings indicate limits beyond which damage to the device may occur. Operating ratings indicate conditions the device is intended to be functional, but device parameter specifications may not be ensured under these conditions. For ensured specifications and test conditions, see the Electrical Characteristics.
(2) If Military/Aerospace specified devices are required, please contact the Texas Instruments Sales Office/ Distributors for availability and specifications.
(3) Due to timing considerations of the LM1577/LM2577 current limit circuit, output current cannot be internally limited when the LM1577/LM2577 is used as a step-up regulator. To prevent damage to the switch, its current must be externally limited to 6.0A. However, output current is internally limited when the LM1577/LM2577 is used as a flyback or forward converter regulator in accordance to the Application Hints.

Operating Ratings

Supply Voltage		$3.5V \le V_{IN} \le 40V$
Output Switch Voltage		$0V \le V_{SWITCH} \le 60V$
Output Switch Current		$I_{SWITCH} \le 3.0A$
Junction Temperature Range	LM1577	$-55°C \le T_J \le +150°C$
	LM2577	$-40°C \le T_J \le +125°C$

Electrical Characteristics—LM1577-12, LM2577-12

Specifications with standard type face are for T_J = 25°C, and those in **bold type face** apply over full **Operating Temperature Range**. Unless otherwise specified, V_{IN} = 5V, and I_{SWITCH} = 0.

Symbol	Parameter	Conditions	Typical	LM1577-12 Limit[1][2]	LM2577-12 Limit[3]	Units (Limits)
SYSTEM PARAMETERS Circuit of Figure 29[4]						
V_{OUT}	Output Voltage	V_{IN} = 5V to 10V I_{LOAD} = 100 mA to 800 mA[1]	12.0			V
				11.60/**11.40**	11.60/**11.40**	V(min)
				12.40/**12.60**	12.40/**12.60**	V(max)
$\frac{\Delta V_{OUT}}{\Delta V_{IN}}$ (1)	Line Regulation	V_{IN} = 3.5V to 10V I_{LOAD} = 300 mA	20			mV
				50/**100**	50/**100**	mV(max)
$\frac{\Delta V_{OUT}}{\Delta_{LOAD}}$ (2)	Load Regulation	V_{IN} = 5V I_{LOAD} = 100 mA to 800 mA	20			mV
				50/**100**	50/**100**	mV(max)
η	Efficiency	V_{IN} = 5V, I_{LOAD} = 800 mA	80			%
DEVICE PARAMETERS						
I_S	Input Supply Current	$V_{FEEDBACK}$ = 14V (Switch Off)	7.5			mA
				10.0/**14.0**	10.0/**14.0**	mA(max)
		I_{SWITCH} = 2.0A	25			mA
		V_{COMP} = 2.0V (Max Duty Cycle)		50/**85**	50/**85**	mA(max)

(1) All limits ensured at room temperature (standard type face) and at temperature extremes (boldface type). All limits are used to calculate Outgoing Quality Level, and are 100% production tested.
(2) A military RETS electrical test specification is available on request. At the time of printing, the LM1577K-12/883, LM1577K-15/883, and LM1577K-ADJ/883 RETS specifications complied fully with the boldface limits in these columns. The LM1577K-12/883, LM1577K-15/883, and LM1577K-ADJ/883 may also be procured to Standard Military Drawing specifications.
(3) All limits ensured at room temperature (standard type face) and at temperature extremes (boldface type). All room temperature limits are 100% production tested. All limits at temperature extremes are ensured via correlation using standard Statistical Quality Control (SQC) methods.
(4) External components such as the diode, inductor, input and output capacitors can affect switching regulator performance. When the LM1577/LM2577 is used as shown in the Test Circuit, system performance will be as specified by the system parameters.

Copyright © 1999–2013, Texas Instruments Incorporated

Electrical Characteristics—LM1577-12, LM2577-12 (continued)

Specifications with standard type face are for T_J = 25°C, and those in **bold type face** apply over full **Operating Temperature Range**. Unless otherwise specified, V_{IN} = 5V, and I_{SWITCH} = 0.

Symbol	Parameter	Conditions	Typical	LM1577-12 Limit(1)(2)	LM2577-12 Limit(3)	Units (Limits)
V_{UV}	Input Supply Undervoltage Lockout	I_{SWITCH} = 100 mA	2.90			V
				2.70/**2.65**	2.70/**2.65**	V(min)
				3.10/**3.15**	3.10/**3.15**	V(max)
f_O	Oscillator Frequency	Measured at Switch Pin I_{SWITCH} = 100 mA	52			kHz
				48/**42**	48/**42**	kHz(min)
				56/**62**	56/**62**	kHz(max)
V_{REF}	Output Reference Voltage	Measured at Feedback Pin V_{IN} = 3.5V to 40V V_{COMP} = 1.0V				V
			12	11.76/**11.64**	11.76/**11.64**	V(min)
				12.24/**12.36**	12.24/**12.36**	V(max)
$\frac{\Delta V_{REF}}{\Delta V_{IN}}$	Output Reference Voltage Line Regulator	V_{IN} = 3.5V to 40V	7			mV
R_{FB}	Feedback Pin Input Resistance		9.7			kΩ
G_M	Error Amp Transconductance	I_{COMP} = −30 μA to +30 μA V_{COMP} = 1.0V	370			μmho
				225/**145**	225/**145**	μmho(min)
				515/**615**	515/**615**	μmho(max)
A_{VOL}	Error Amp Voltage Gain	V_{COMP} = 1.1V to 1.9V R_{COMP} = 1.0 MΩ(5)	80			V/V
				50/**25**	50/**25**	V/V(min)
	Error Amplifier Output Swing	Upper Limit $V_{FEEDBACK}$ = 10.0V	2.4			V
				2.2/**2.0**	2.2/**2.0**	V(min)
		Lower Limit $V_{FEEDBACK}$ = 15.0V	0.3			V
				0.40/**0.55**	0.40/**0.55**	V(max)
	Error Amplifier Output Current	$V_{FEEDBACK}$ = 10.0V to 15.0V V_{COMP} = 1.0V	±200			μA
				±130/**±90**	±130/**±90**	μA(min)
				±300/**±400**	±300/**±400**	μA(max)
I_{SS}	Soft Start Current	$V_{FEEDBACK}$ = 10.0V V_{COMP} = 0V	5.0			μA
				2.5/**1.5**	2.5/**1.5**	μA(min)
				7.5/**9.5**	7.5/**9.5**	μA(max)
D	Maximum Duty Cycle	V_{COMP} = 1.5V I_{SWITCH} = 100 mA	95			%
				93/**90**	93/**90**	%(min)
$\frac{\Delta I_{SWITCH}}{\Delta V_{COMP}}$	Switch Transconductance		12.5			A/V
I_L	Switch Leakage Current	V_{SWITCH} = 65V $V_{FEEDBACK}$ = 15V (Switch Off)	10			μA
				300/**600**	300/**600**	μA(max)
V_{SAT}	Switch Saturation Voltage	I_{SWITCH} = 2.0A V_{COMP} = 2.0V (Max Duty Cycle)	0.5			V
				0.7/**0.9**	0.7/**0.9**	V(max)
	NPN Switch Current Limit		4.5			A
				3.7/**3.0**	3.7/**3.0**	A(min)
				5.3/**6.0**	5.3/**6.0**	A(max)

(5) A 1.0 MΩ resistor is connected to the compensation pin (which is the error amplifier's output) to ensure accuracy in measuring A_{VOL}. In actual applications, this pin's load resistance should be ≥10 MΩ, resulting in A_{VOL} that is typically twice the ensured minimum limit.

Copyright © 1999–2013, Texas Instruments Incorporated

Electrical Characteristics—LM1577-15, LM2577-15

Specifications with standard type face are for T_J = 25°C, and those in **bold type face** apply over full **Operating Temperature Range**. Unless otherwise specified, V_{IN} = 5V, and I_{SWITCH} = 0.

Symbol	Parameter	Conditions	Typical	LM1577-15 Limit(1)(2)	LM2577-15 Limit(3)	Units (Limits)
SYSTEM PARAMETERS Circuit of Figure 30(4)						
V_{OUT}	Output Voltage	V_{IN} = 5V to 12V I_{LOAD} = 100 mA to 600 mA (1)	15.0			V
				14.50/**14.25**	14.50/**14.25**	V(min)
				15.50/**15.75**	15.50/**15.75**	V(max)
$\frac{\Delta V_{OUT}}{\Delta V_{IN}}$	Line Regulation	V_{IN} = 3.5V to 12V I_{LOAD} = 300 mA	20	50/**100**	50/**100**	mV mV(max)
$\frac{\Delta V_{OUT}}{\Delta_{LOAD}}$	Load Regulation	V_{IN} = 5V I_{LOAD} = 100 mA to 600 mA	20	50/**100**	50/**100**	mV mV(max)
η	Efficiency	V_{IN} = 5V, I_{LOAD} = 600 mA	80			%
DEVICE PARAMETERS						
I_S	Input Supply Current	$V_{FEEDBACK}$ = 18.0V (Switch Off)	7.5			mA
				10.0/**14.0**	10.0/**14.0**	mA(max)
		I_{SWITCH} = 2.0A V_{COMP} = 2.0V (Max Duty Cycle)	25			mA
				50/**85**	50/**85**	mA(max)
V_{UV}	Input Supply Undervoltage Lockout	I_{SWITCH} = 100 mA	2.90			V
				2.70/**2.65**	2.70/**2.65**	V(min)
				3.10/**3.15**	3.10/**3.15**	V(max)
f_O	Oscillator Frequency	Measured at Switch Pin I_{SWITCH} = 100 mA	52			kHz
				48/**42**	48/**42**	kHz(min)
				56/**62**	56/**62**	kHz(max)
V_{REF}	Output Reference Voltage	Measured at Feedback Pin V_{IN} = 3.5V to 40V V_{COMP} = 1.0V				V
			15	14.70/**14.55**	14.70/**14.55**	V(min)
				15.30/**15.45**	15.30/**15.45**	V(max)
$\frac{\Delta V_{REF}}{\Delta V_{IN}}$	Output Reference Voltage Line Regulation	V_{IN} = 3.5V to 40V	10			mV
R_{FB}	Feedback Pin Input Voltage Line Regulator		12.2			kΩ
G_M	Error Amp Transconductance	I_{COMP} = −30 μA to +30 μA V_{COMP} = 1.0V	300			μmho
				170/**110**	170/**110**	μmho(min)
				420/**500**	420/**500**	μmho(max)
A_{VOL}	Error Amp Voltage Gain	V_{COMP} = 1.1V to 1.9V R_{COMP} = 1.0 MΩ(5)	65			V/V
				40/**20**	40/**20**	V/V(min)

(1) All limits ensured at room temperature (standard type face) and at temperature extremes (boldface type). All limits are used to calculate Outgoing Quality Level, and are 100% production tested.
(2) A military RETS electrical test specification is available on request. At the time of printing, the LM1577K-12/883, LM1577K-15/883, and LM1577K-ADJ/883 RETS specifications complied fully with the boldface limits in these columns. The LM1577K-12/883, LM1577K-15/883, and LM1577K-ADJ/883 may also be procured to Standard Military Drawing specifications.
(3) All limits ensured at room temperature (standard type face) and at temperature extremes (boldface type). All room temperature limits are 100% production tested. All limits at temperature extremes are ensured via correlation using standard Statistical Quality Control (SQC) methods.
(4) External components such as the diode, inductor, input and output capacitors can affect switching regulator performance. When the LM1577/LM2577 is used as shown in the Test Circuit, system performance will be as specified by the system parameters.
(5) A 1.0 MΩ resistor is connected to the compensation pin (which is the error amplifier's output) to ensure accuracy in measuring A_{VOL}. In actual applications, this pin's load resistance should be ≥10 MΩ, resulting in A_{VOL} that is typically twice the ensured minimum limit.

Copyright © 1999–2013, Texas Instruments Incorporated

Electrical Characteristics—LM1577-15, LM2577-15 (continued)

Specifications with standard type face are for T_J = 25°C, and those in **bold type face** apply over full **Operating Temperature Range**. Unless otherwise specified, V_{IN} = 5V, and I_{SWITCH} = 0.

Symbol	Parameter	Conditions	Typical	LM1577-15 Limit(1)(2)	LM2577-15 Limit(3)	Units (Limits)
	Error Amplifier Output Swing	Upper Limit $V_{FEEDBACK}$ = 12.0V	2.4			V
				2.2/**2.0**	2.2/**2.0**	V(min)
		Lower Limit $V_{FEEDBACK}$ = 18.0V	0.3			V
				0.4/**0.55**	0.40/**0.55**	V(max)
	Error Amp Output Current	$V_{FEEDBACK}$ = 12.0V to 18.0V V_{COMP} = 1.0V	±200			μA
				±130/**±90**	±130/**±90**	μA(min)
				±300/**±400**	±300/**±400**	μA(max)
I_{SS}	Soft Start Current	$V_{FEEDBACK}$ = 12.0V V_{COMP} = 0V	5.0			μA
				2.5/**1.5**	2.5/**1.5**	μA(min)
				7.5/**9.5**	7.5/**9.5**	μA(max)
D	Maximum Duty Cycle	V_{COMP} = 1.5V I_{SWITCH} = 100 mA	95			%
				93/**90**	93/**90**	%(min)
$\frac{\Delta I_{SWITCH}}{\Delta V_{COMP}}$	Switch Transconductance		12.5			A/V
I_L	Switch Leakage Current	V_{SWITCH} = 65V $V_{FEEDBACK}$ = 18.0V (Switch Off)	10			μA
				300/**600**	300/**600**	μA(max)
V_{SAT}	Switch Saturation Voltage	I_{SWITCH} = 2.0A V_{COMP} = 2.0V (Max Duty Cycle)	0.5			V
				0.7/**0.9**	0.7/**0.9**	V(max)
	NPN Switch Current Limit	V_{COMP} = 2.0V	4.3			A
				3.7/**3.0**	3.7/**3.0**	A(min)
				5.3/**6.0**	5.3/**6.0**	A(max)

Copyright © 1999–2013, Texas Instruments Incorporated

Electrical Characteristics—LM1577-ADJ, LM2577-ADJ

Specifications with standard type face are for T_J = 25°C, and those in **bold type face** apply over full **Operating Temperature Range**. Unless otherwise specified, V_{IN} = 5V, $V_{FEEDBACK}$ = V_{REF}, and I_{SWITCH} = 0.

Symbol	Parameter	Conditions	Typical	LM1577-ADJ Limit(1)(2)	LM2577-ADJ Limit(3)	Units (Limits)
SYSTEM PARAMETERS Circuit of Figure 31 (4)						
V_{OUT}	Output Voltage	V_{IN} = 5V to 10V I_{LOAD} = 100 mA to 800 mA(1)	12.0			V
				11.60/**11.40**	11.60/**11.40**	V(min)
				12.40/**12.60**	12.40/**12.60**	V(max)
$\Delta V_{OUT}/\Delta V_{IN}$	Line Regulation	V_{IN} = 3.5V to 10V I_{LOAD} = 300 mA	20			mV
				50/**100**	50/**100**	mV(max)
$\Delta V_{OUT}/\Delta I_{LOAD}$	Load Regulation	V_{IN} = 5V I_{LOAD} = 100 mA to 800 mA	20			mV
				50/**100**	50/**100**	mV(max)
η	Efficiency	V_{IN} = 5V, I_{LOAD} = 800 mA	80			%
DEVICE PARAMETERS						
I_S	Input Supply Current	$V_{FEEDBACK}$ = 1.5V (Switch Off)	7.5			mA
				10.0/**14.0**	10.0/**14.0**	mA(max)
		I_{SWITCH} = 2.0A V_{COMP} = 2.0V (Max Duty Cycle)	25			mA
				50/**85**	50/**85**	mA(max)
V_{UV}	Input Supply Undervoltage Lockout	I_{SWITCH} = 100 mA	2.90			V
				2.70/**2.65**	2.70/**2.65**	V(min)
				3.10/**3.15**	3.10/**3.15**	V(max)
f_O	Oscillator Frequency	Measured at Switch Pin I_{SWITCH} = 100 mA	52			kHz
				48/**42**	48/**42**	kHz(min)
				56/**62**	56/**62**	kHz(max)
V_{REF}	Reference Voltage	Measured at Feedback Pin V_{IN} = 3.5V to 40V V_{COMP} = 1.0V				V
			1.230	1.214/**1.206**	1.214/**1.206**	V(min)
				1.246/**1.254**	1.246/**1.254**	V(max)
$\Delta V_{REF}/\Delta V_{IN}$	Reference Voltage Line Regulation	V_{IN} = 3.5V to 40V	0.5			mV
I_B	Error Amp Input Bias Current	V_{COMP} = 1.0V	100			nA
				300/**800**	300/**800**	nA(max)
G_M	Error Amp Transconductance	I_{COMP} = −30 μA to +30 μA V_{COMP} = 1.0V	3700			μmho
				2400/**1600**	2400/**1600**	μmho(min)
				4800/**5800**	4800/**5800**	μmho(max)
A_{VOL}	Error Amp Voltage Gain	V_{COMP} = 1.1V to 1.9V R_{COMP} = 1.0 MΩ(5)	800			V/V
				500/**250**	500/**250**	V/V(min)
	Error Amplifier Output Swing	Upper Limit $V_{FEEDBACK}$ = 1.0V	2.4			V
				2.2/**2.0**	2.2/**2.0**	V(min)
		Lower Limit $V_{FEEDBACK}$ = 1.5V	0.3			V
				0.40/**0.55**	0.40/**0.55**	V(max)

(1) All limits ensured at room temperature (standard type face) and at temperature extremes (boldface type). All limits are used to calculate Outgoing Quality Level, and are 100% production tested.
(2) A military RETS electrical test specification is available on request. At the time of printing, the LM1577K-12/883, LM1577K-15/883, and LM1577K-ADJ/883 RETS specifications complied fully with the boldface limits in these columns. The LM1577K-12/883, LM1577K-15/883, and LM1577K-ADJ/883 may also be procured to Standard Military Drawing specifications.
(3) All limits ensured at room temperature (standard type face) and at temperature extremes (boldface type). All room temperature limits are 100% production tested. All limits at temperature extremes are ensured via correlation using standard Statistical Quality Control (SQC) methods.
(4) External components such as the diode, inductor, input and output capacitors can affect switching regulator performance. When the LM1577/LM2577 is used as shown in the Test Circuit, system performance will be as specified by the system parameters.
(5) A 1.0 MΩ resistor is connected to the compensation pin (which is the error amplifier's output) to ensure accuracy in measuring A_{VOL}. In actual applications, this pin's load resistance should be ≥10 MΩ, resulting in A_{VOL} that is typically twice the ensured minimum limit.

Copyright © 1999–2013, Texas Instruments Incorporated

Electrical Characteristics—LM1577-ADJ, LM2577-ADJ (continued)

Specifications with standard type face are for T_J = 25°C, and those in **bold type face** apply over full **Operating Temperature Range**. Unless otherwise specified, V_{IN} = 5V, $V_{FEEDBACK}$ = V_{REF}, and I_{SWITCH} = 0.

Symbol	Parameter	Conditions	Typical	LM1577-ADJ Limit(1)(2)	LM2577-ADJ Limit(3)	Units (Limits)
	Error Amp Output Current	$V_{FEEDBACK}$ = 1.0V to 1.5V V_{COMP} = 1.0V	±200			μA
				±130/**±90**	±130/**±90**	μA(min)
				±300/**±400**	±300/**±400**	μA(max)
I_{SS}	Soft Start Current	$V_{FEEDBACK}$ = 1.0V V_{COMP} = 0V	5.0			μA
				2.5/**1.5**	2.5/**1.5**	μA(min)
				7.5/**9.5**	7.5/**9.5**	μA(max)
D	Maximum Duty Cycle	V_{COMP} = 1.5V I_{SWITCH} = 100 mA	95			%
				93/**90**	93/**90**	%(min)
$\Delta I_{SWITCH}/\Delta V_{COMP}$	Switch Transconductance		12.5			A/V
I_L	Switch Leakage Current	V_{SWITCH} = 65V $V_{FEEDBACK}$ = 1.5V (Switch Off)	10			μA
				300/**600**	300/**600**	μA(max)
V_{SAT}	Switch Saturation Voltage	I_{SWITCH} = 2.0A V_{COMP} = 2.0V (Max Duty Cycle)	0.5			V
				0.7/**0.9**	0.7/**0.9**	V(max)
	NPN Switch Current Limit	V_{COMP} = 2.0V	4.3			A
				3.7/**3.0**	3.7/**3.0**	A(min)
				5.3/**6.0**	5.3/**6.0**	A(max)
THERMAL PARAMETERS (All Versions)						
θ_{JA} θ_{JC}	Thermal Resistance	K Package, Junction to Ambient K Package, Junction to Case	35 1.5			°C/W
θ_{JA} θ_{JC}		T Package, Junction to Ambient T Package, Junction to Case	65 2			
θ_{JA}		N Package, Junction to Ambient (6)	85			
θ_{JA}		M Package, Junction to Ambient (6)	100			
θ_{JA}		S Package, Junction to Ambient (7)	37			

(6) Junction to ambient thermal resistance with approximately 1 square inch of pc board copper surrounding the leads. Additional copper area will lower thermal resistance further. See thermal model in “Switchers Made Simple” software.

(7) If the DDPAK/TO-263 package is used, the thermal resistance can be reduced by increasing the PC board copper area thermally connected to the package. Using 0.5 square inches of copper area, θ_{JA} is 50°C/W; with 1 square inch of copper area, θ_{JA} is 37°C/W; and with 1.6 or more square inches of copper area, θ_{JA} is 32°C/W.

Copyright © 1999–2013, Texas Instruments Incorporated

Typical Performance Characteristics

Reference Voltage vs Temperature

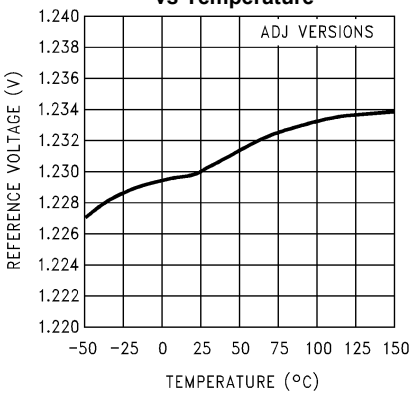

Figure 8.

Reference Voltage vs Temperature

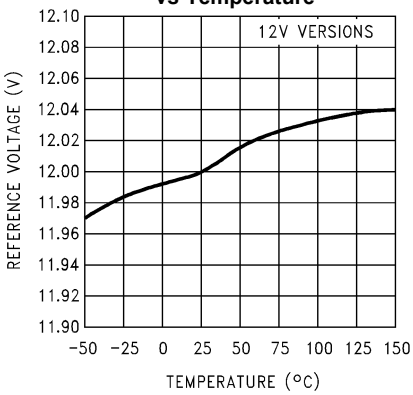

Figure 9.

Reference Voltage vs Temperature

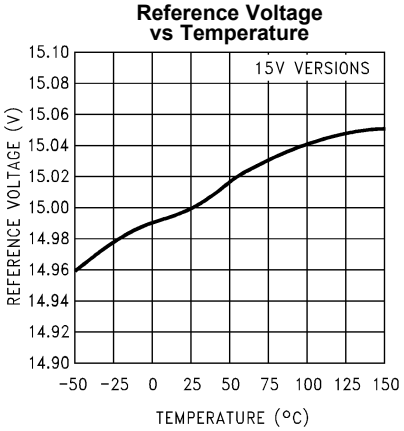

Figure 10.

Δ Reference Voltage vs Supply Voltage

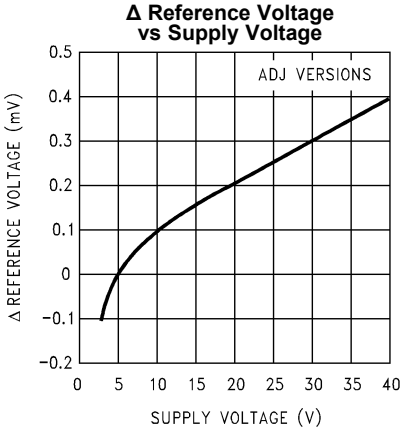

Figure 11.

Δ Reference Voltage vs Supply Voltage

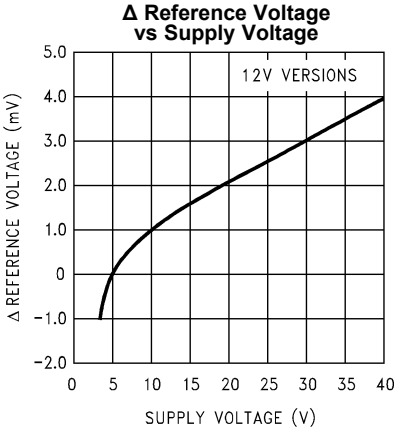

Figure 12.

Δ Reference Voltage vs Supply Voltage

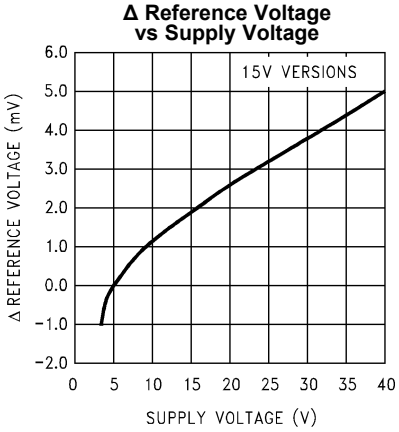

Figure 13.

Copyright © 1999–2013, Texas Instruments Incorporated

Typical Performance Characteristics (continued)

Error Amp Transconductance vs Temperature

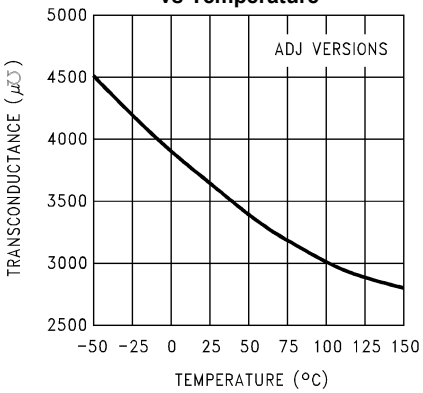

Figure 14.

Error Amp Transconductance vs Temperature

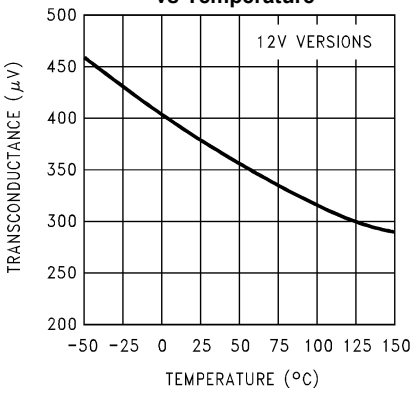

Figure 15.

Error Amp Transconductance vs Temperature

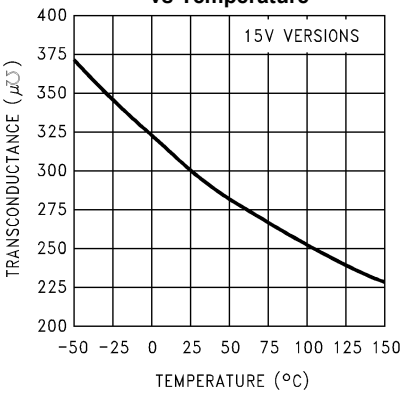

Figure 16.

Error Amp Voltage Gain vs Temperature

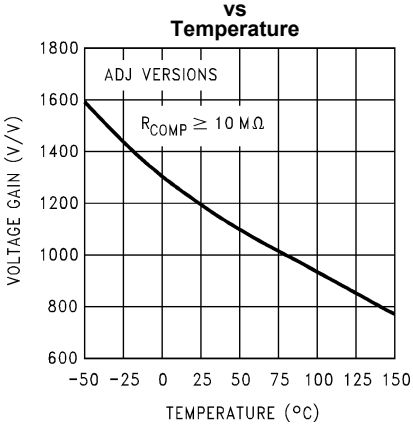

Figure 17.

Error Amp Voltage Gain vs Temperature

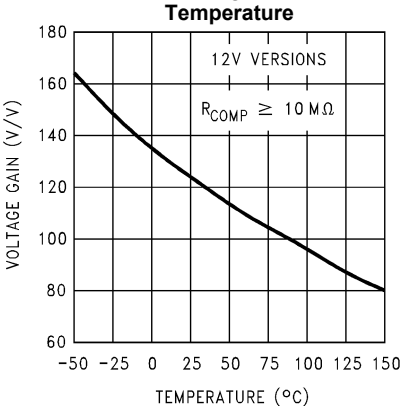

Figure 18.

Error Amp Voltage Gain vs Temperature

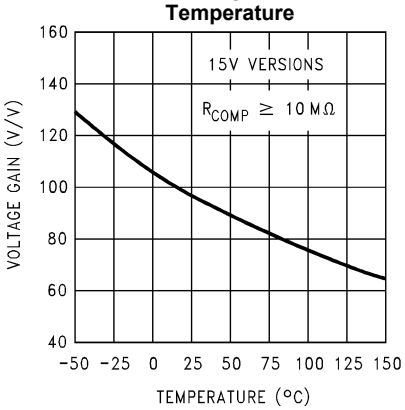

Figure 19.

Copyright © 1999–2013, Texas Instruments Incorporated

Typical Performance Characteristics (continued)

Quiescent Current vs Temperature

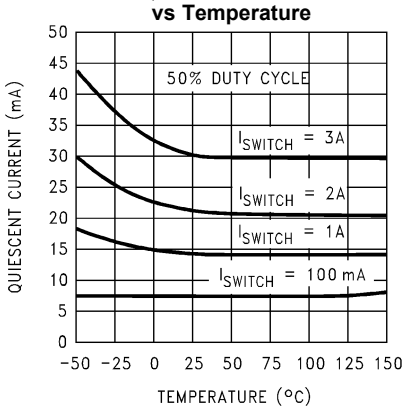

Figure 20.

Quiescent Current vs Switch Current

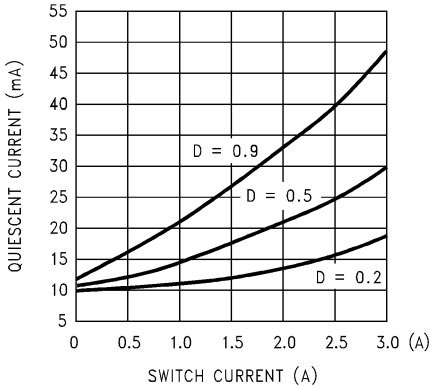

Figure 21.

Current Limit vs Temperature

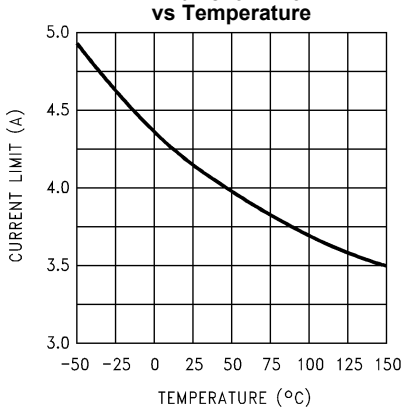

Figure 22.

Current Limit Response Time vs Overdrive

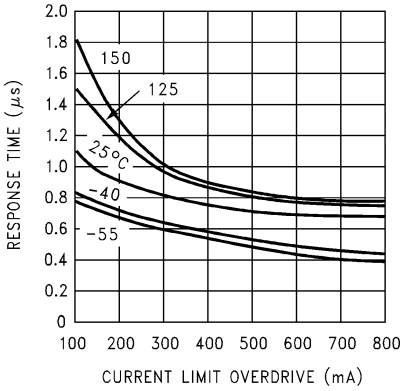

Figure 23.

Switch Saturation Voltage vs Switch Current

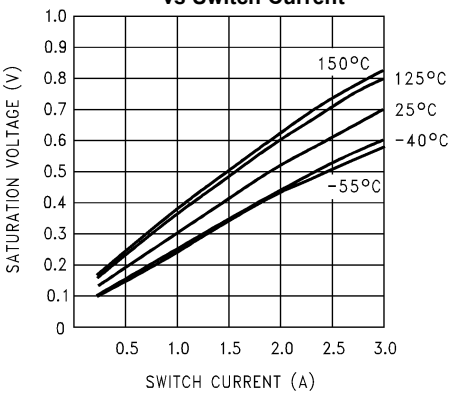

Figure 24.

Switch Transconductance vs Temperature

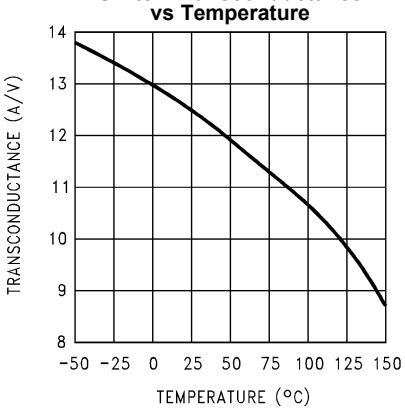

Figure 25.

Typical Performance Characteristics (continued)

Feedback Pin Bias Current vs Temperature

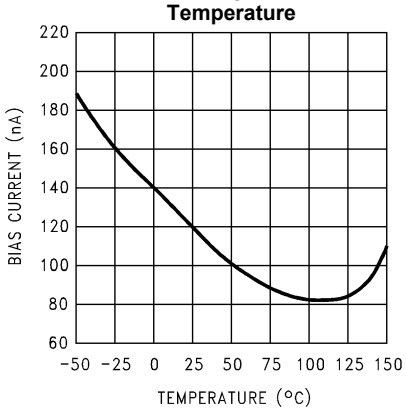

Figure 26.

Oscillator Frequency vs Temperature

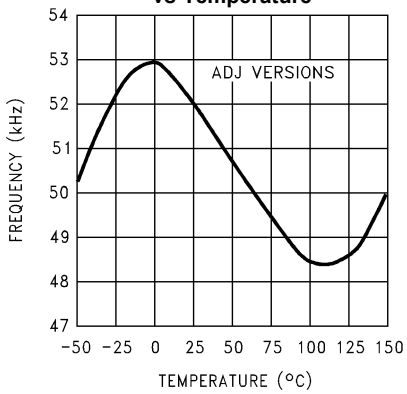

Figure 27.

Maximum Power Dissipation (DDPAK/TO-263)(1)

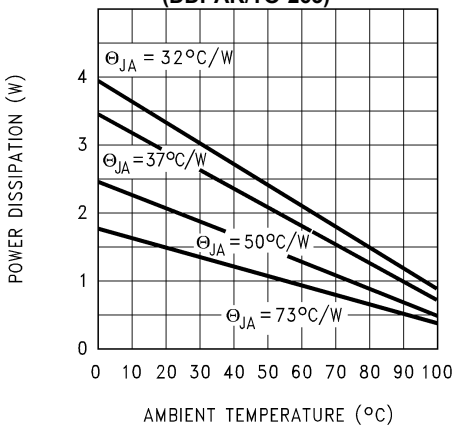

Figure 28.

(1) If the DDPAK/TO-263 package is used, the thermal resistance can be reduced by increasing the PC board copper area thermally connected to the package. Using 0.5 square inches of copper area, θ_{JA} is 50°C/W; with 1 square inch of copper area, θ_{JA} is 37°C/W; and with 1.6 or more square inches of copper area, θ_{JA} is 32°C/W.

Copyright © 1999–2013, Texas Instruments Incorporated

LM1577-12, LM2577-12 TEST CIRCUIT

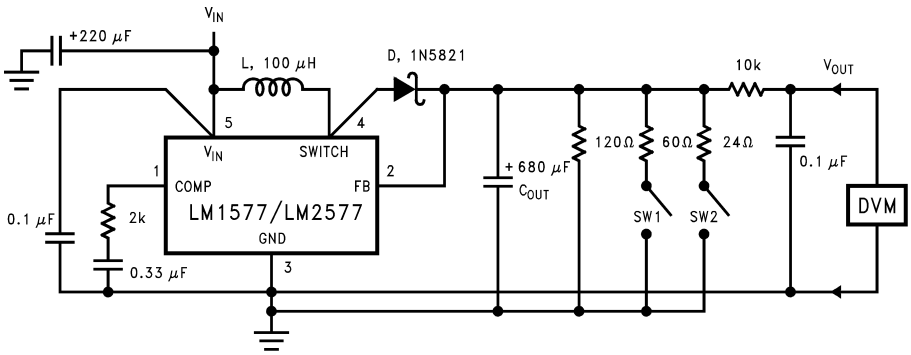

L = 415-0930 (AIE)
D = any manufacturer
C_{OUT} = Sprague Type 673D
Electrolytic 680 μF, 20V
Note: Pin numbers shown are for TO-220 (T) package

Figure 29. Circuit Used to Specify System Parameters for 12V Versions

LM1577-15, LM2577-15 Test Circuit

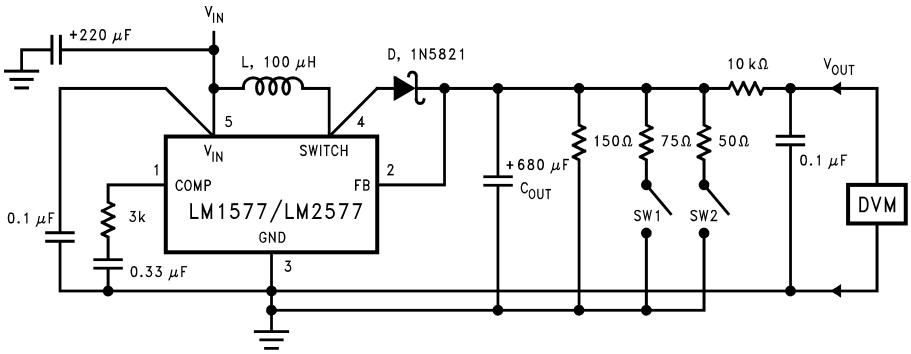

L = 415-0930 (AIE)
D = any manufacturer
C_{OUT} = Sprague Type 673D
Electrolytic 680 μF, 20V
Note: Pin numbers shown are for TO-220 (T) package

Figure 30. Circuit Used to Specify System Parameters for 15V Versions

Copyright © 1999–2013, Texas Instruments Incorporated

LM1577-ADJ, LM2577-ADJ Test Circuit

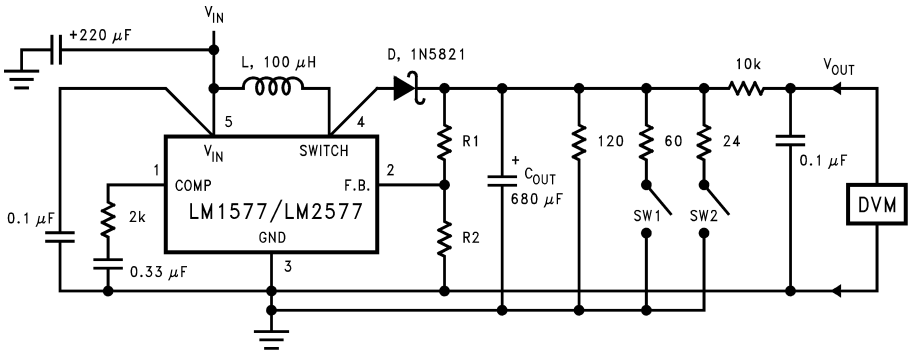

L = 415-0930 (AIE)
D = any manufacturer
C_{OUT} = Sprague Type 673D
Electrolytic 680 µF, 20V
R1 = 48.7k in series with 511Ω (1%)
R2 = 5.62k (1%)
Note: Pin numbers shown are for TO-220 (T) package

Figure 31. Circuit Used to Specify System Parameters for ADJ Versions

Application Hints

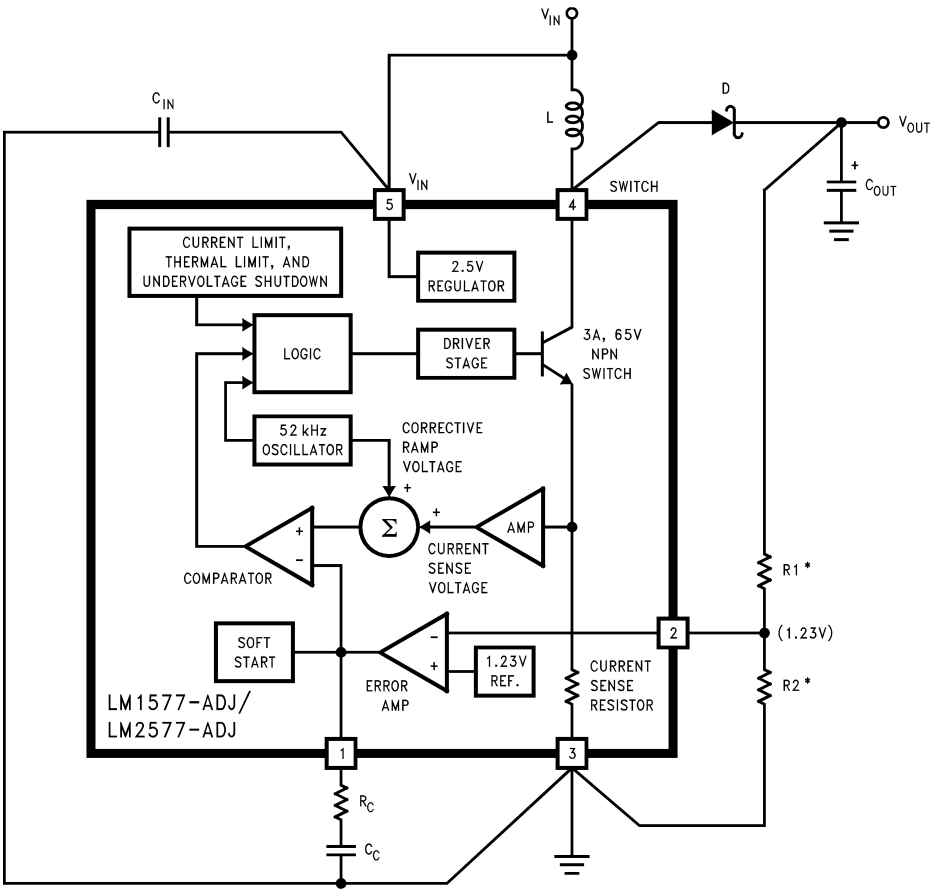

Note: Pin numbers shown are for TO-220 (T) package
*Resistors are internal to LM1577/LM2577 for 12V and 15V versions.

Figure 32. LM1577/LM2577 Block Diagram and Boost Regulator Application

Copyright © 1999–2013, Texas Instruments Incorporated

STEP-UP (BOOST) REGULATOR

Figure 32 shows the LM1577-ADJ/LM2577-ADJ used as a Step-Up Regulator. This is a switching regulator used for producing an output voltage greater than the input supply voltage. The LM1577-12/LM2577-12 and LM1577-15/LM2577-15 can also be used for step-up regulators with 12V or 15V outputs (respectively), by tying the feedback pin directly to the regulator output.

A basic explanation of how it works is as follows. The LM1577/LM2577 turns its output switch on and off at a frequency of 52 kHz, and this creates energy in the inductor (L). When the NPN switch turns on, the inductor current charges up at a rate of V_{IN}/L, storing current in the inductor. When the switch turns off, the lower end of the inductor flies above V_{IN}, discharging its current through diode (D) into the output capacitor (C_{OUT}) at a rate of $(V_{OUT} - V_{IN})/L$. Thus, energy stored in the inductor during the switch on time is transferred to the output during the switch off time. The output voltage is controlled by the amount of energy transferred which, in turn, is controlled by modulating the peak inductor current. This is done by feeding back a portion of the output voltage to the error amp, which amplifies the difference between the feedback voltage and a 1.230V reference. The error amp output voltage is compared to a voltage proportional to the switch current (i.e., inductor current during the switch on time).

The comparator terminates the switch on time when the two voltages are equal, thereby controlling the peak switch current to maintain a constant output voltage.

Voltage and current waveforms for this circuit are shown in Figure 33, and formulas for calculating them are given in Table 1.

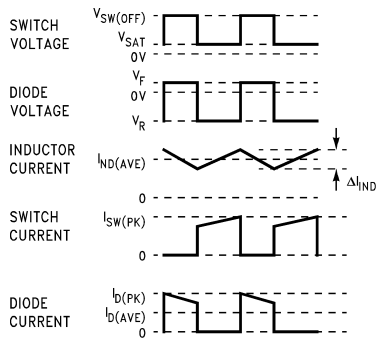

Figure 33. Step-Up Regulator Waveforms

Table 1. Step-Up Regulator Formulas (1)

Duty Cycle	D	$\frac{V_{OUT} + V_F - V_{IN}}{V_{OUT} + V_F - V_{SAT}} \approx \frac{V_{OUT} - V_{IN}}{V_{OUT}}$
Average Inductor Current	$I_{IND(AVE)}$	$\frac{I_{LOAD}}{1 - D}$
Inductor Current Ripple	ΔI_{IND}	$\frac{V_{IN} - V_{SAT}}{L} \frac{D}{52{,}000}$
Peak Inductor Current	$I_{IND(PK)}$	$\frac{I_{LOAD(max)}}{1 - D_{(max)}} + \frac{\Delta I_{IND}}{2}$
Peak Switch Current	$I_{SW(PK)}$	$\frac{I_{LOAD(max)}}{1 - D_{(max)}} + \frac{\Delta I_{IND}}{2}$
Switch Voltage When Off	$V_{SW(OFF)}$	$V_{OUT} + V_F$
Diode Reverse Voltage	V_R	$V_{OUT} - V_{SAT}$
Average Diode Current	$I_{D(AVE)}$	I_{LOAD}
Peak Diode Current	$I_{D(PK)}$	$\frac{I_{LOAD}}{1 - D_{(max)}} + \frac{\Delta I_{IND}}{2}$
Power Dissipation of LM1577/2577	P_D	$0.25\Omega \left(\frac{I_{LOAD}}{1 - D}\right)^2 D + \frac{I_{LOAD}\, D\, V_{IN}}{50\,(1 - D)}$

(1) V_F = Forward Biased Diode Voltage
I_{LOAD} = Output Load Current

Copyright © 1999–2013, Texas Instruments Incorporated

STEP-UP REGULATOR DESIGN PROCEDURE

The following design procedure can be used to select the appropriate external components for the circuit in Figure 32, based on these system requirements.

Given:

- $V_{IN\ (min)}$ = Minimum input supply voltage
- V_{OUT} = Regulated output voltage
- $I_{LOAD(max)}$ = Maximum output load current
- Before proceeding any further, determine if the LM1577/LM2577 can provide these values of V_{OUT} and $I_{LOAD(max)}$ when operating with the minimum value of V_{IN}. The upper limits for V_{OUT} and $I_{LOAD(max)}$ are given by the following equations.

$$I_{LOAD(max)} \le \frac{2.1A \times V_{IN(min)}}{V_{OUT}}$$

where

- $V_{OUT} \le 60V$
- $V_{OUT} \le 10 \times V_{IN(min)}$ (3)

These limits must be greater than or equal to the values specified in this application.

1. Inductor Selection (L)

A. *Voltage Options:*

1. **For 12V or 15V output**

From Figure 34 (for 12V output) or Figure 35 (for 15V output), identify inductor code for region indicated by $V_{IN\ (min)}$ and $I_{LOAD\ (max)}$. The shaded region indicates conditions for which the LM1577/LM2577 output switch would be operating beyond its switch current rating. The minimum operating voltage for the LM1577/LM2577 is 3.5V.

From here, ***proceed to step C***.

2. **For Adjustable version**

Preliminary calculations:

The inductor selection is based on the calculation of the following three parameters:

$D_{(max)}$, the maximum switch duty cycle ($0 \le D \le 0.9$):

$$D_{(max)} = \frac{V_{OUT} + V_F - V_{IN(min)}}{V_{OUT} + V_F - 0.6V} \quad (4)$$

where V_F = 0.5V for Schottky diodes and 0.8V for fast recovery diodes (typically);

E •T, the product of volts × time that charges the inductor:

$$E \bullet T = \frac{D_{(max)}\,(V_{IN(min)} - 0.6V)10^6}{52{,}000\ Hz} \quad (V \bullet \mu s) \quad (5)$$

$I_{IND,DC}$, the average inductor current under full load;

$$I_{IND,DC} = \frac{1.05 \times I_{LOAD(max)}}{1 - D_{(max)}} \quad (6)$$

B. *Identify Inductor Value:*

1. From *Figure 36*, identify the inductor code for the region indicated by the intersection of E•T and $I_{IND,DC}$. This code gives the inductor value in microhenries. The L or H prefix signifies whether the inductor is rated for a maximum E•T of 90 V•µs (L) or 250 V•µs (H).

2. If D < 0.85, go on to step C. If D ≥ 0.85, then calculate the minimum inductance needed to ensure the switching regulator's stability:

$$L_{MIN} = \frac{6.4\,(V_{IN(min)} - 0.6V)\,(2D_{(max)} - 1)}{1 - D_{(max)}} \quad (\mu H) \quad (7)$$

If L_{MIN} is smaller than the inductor value found in step B1, go on to step C. Otherwise, the inductor value found in step B1 is too low; an appropriate inductor code should be obtained from the graph as follows:

1. Find the lowest value inductor that is greater than L_{MIN}.

Copyright © 1999–2013, Texas Instruments Incorporated

2. Find where E•T intersects this inductor value to determine if it has an L or H prefix. If E•T intersects both the L and H regions, select the inductor with an H prefix.

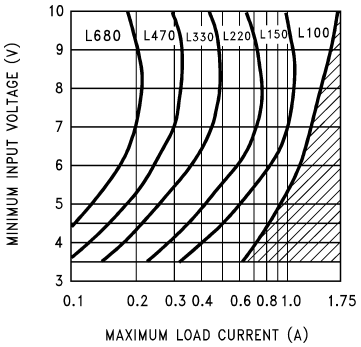

Figure 34. LM2577-12 Inductor Selection Guide

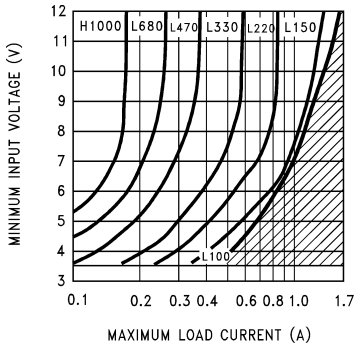

Figure 35. LM2577-15 Inductor Selection Guide

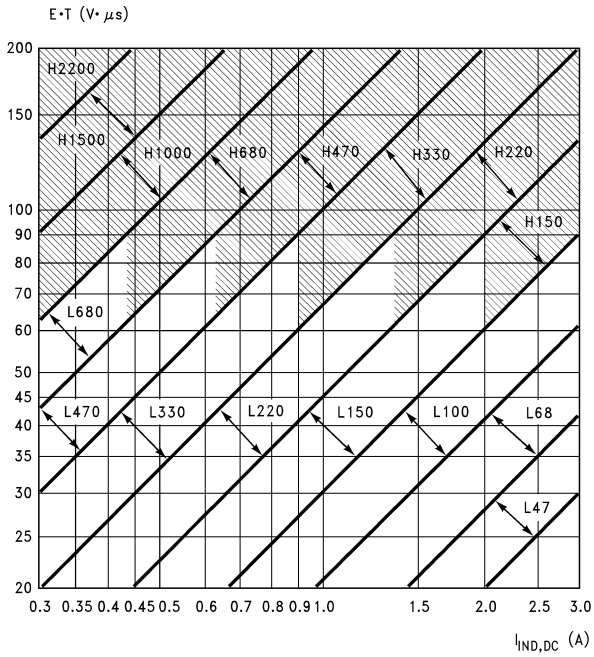

Note: These charts assume that the inductor ripple current is approximately 20% to 30% of the average inductor current (when the regulator is under full load). Greater ripple current causes higher peak switch currents and greater output ripple voltage; lower ripple current is achieved with larger-value inductors. The factor of 20 to 30% is chosen as a convenient balance between the two extremes.

Figure 36. LM1577-ADJ/LM2577-ADJ Inductor Selection Graph

C. *Select an inductor* from Table 2 which cross-references the inductor codes to the part numbers of three different manufacturers. Complete specifications for these inductors are available from the respective manufacturers. The inductors listed in this table have the following characteristics:

- *AIE:* ferrite, pot-core inductors; Benefits of this type are low electro-magnetic interference (EMI), small physical size, and very low power dissipation (core loss). Be careful not to operate these inductors too far beyond their maximum ratings for E•T and peak current, as this will saturate the core.
- *Pulse:* powdered iron, toroid core inductors; Benefits are low EMI and ability to withstand E•T and peak current above rated value better than ferrite cores.
- *Renco:* ferrite, bobbin-core inductors; Benefits are low cost and best ability to withstand E•T and peak current above rated value. Be aware that these inductors generate more EMI than the other types, and this may interfere with signals sensitive to noise.

 Copyright © 1999–2013, Texas Instruments Incorporated

Table 2. Table of Standardized Inductors and Manufacturer's Part Numbers (1)

Inductor	Manufacturer's Part Number		
Code	Schott	Pulse	Renco
L47	67126980	PE - 53112	RL2442
L68	67126990	PE - 92114	RL2443
L100	67127000	PE - 92108	RL2444
L150	67127010	PE - 53113	RL1954
L220	67127020	PE - 52626	RL1953
L330	67127030	PE - 52627	RL1952
L470	67127040	PE - 53114	RL1951
L680	67127050	PE - 52629	RL1950
H150	67127060	PE - 53115	RL2445
H220	67127070	PE - 53116	RL2446
H330	67127080	PE - 53117	RL2447
H470	67127090	PE - 53118	RL1961
H680	67127100	PE - 53119	RL1960
H1000	67127110	PE - 53120	RL1959
H1500	67127120	PE - 53121	RL1958
H2200	67127130	PE - 53122	RL2448

(1) **Schott Corp.**, (612) 475-1173
1000 Parkers Lake Rd., Wayzata, MN 55391
Pulse Engineering, (619) 268-2400
P.O. Box 12235, San Diego, CA 92112
Renco Electronics Inc., (516) 586-5566
60 Jeffryn Blvd. East, Deer Park, NY 11729

2. Compensation Network (R_C, C_C) and Output Capacitor (C_{OUT}) Selection

R_C and C_C form a pole-zero compensation network that stabilizes the regulator. The values of R_C and C_C are mainly dependant on the regulator voltage gain, $I_{LOAD(max)}$, L and C_{OUT}. The following procedure calculates values for R_C, C_C, and C_{OUT} that ensure regulator stability. Be aware that this procedure doesn't necessarily result in R_C and C_C that provide optimum compensation. In order to ensure optimum compensation, one of the standard procedures for testing loop stability must be used, such as measuring V_{OUT} transient response when pulsing I_{LOAD} (see Figure 39).

A. *First, calculate the maximum value for R_C.*

$$R_C \le \frac{750 \times I_{LOAD(max)} \times V_{OUT}^2}{V_{IN(min)}^2} \tag{8}$$

Select a resistor less than or equal to this value, and it should also be no greater than 3 kΩ.

B. *Calculate the minimum value for* C_{OUT} using the following two equations.

$$C_{OUT} \ge \frac{0.19 \times L \times R_C \times I_{LOAD(max)}}{V_{IN(min)} \times V_{OUT}}$$

and

$$C_{OUT} \ge \frac{V_{IN(min)} \times R_C \times (V_{IN(min)} + (3.74 \times 10^5 \times L))}{487{,}800 \times V_{OUT}^3} \tag{9}$$

The larger of these two values is the minimum value that ensures stability.

C. *Calculate the minimum value of C_C .*

$$C_C \ge \frac{58.5 \times V_{OUT}^2 \times C_{OUT}}{R_C^2 \times V_{IN(min)}} \tag{10}$$

The compensation capacitor is also part of the soft start circuitry. When power to the regulator is turned on, the switch duty cycle is allowed to rise at a rate controlled by this capacitor (with no control on the duty cycle, it would immediately rise to 90%, drawing huge currents from the input power supply). In order to operate properly, the soft start circuit requires $C_C \geq 0.22$ µF.

The value of the output filter capacitor is normally large enough to require the use of aluminum electrolytic capacitors. Table 3 lists several different types that are recommended for switching regulators, and the following parameters are used to select the proper capacitor.

Working Voltage (WVDC): Choose a capacitor with a working voltage at least 20% higher than the regulator output voltage.

Ripple Current: This is the maximum RMS value of current that charges the capacitor during each switching cycle. For step-up and flyback regulators, the formula for ripple current is

$$I_{RIPPLE(RMS)} = \frac{I_{LOAD(max)} \times D_{(max)}}{1 - D_{(max)}} \tag{11}$$

Choose a capacitor that is rated at least 50% higher than this value at 52 kHz.

Equivalent Series Resistance (ESR) : This is the primary cause of output ripple voltage, and it also affects the values of R_C and C_C needed to stabilize the regulator. As a result, the preceding calculations for C_C and R_C are only valid if ESR doesn't exceed the maximum value specified by the following equations.

$$ESR \leq \frac{0.01 \times V_{OUT}}{I_{RIPPLE(P-P)}} \text{ and } \leq \frac{8.7 \times (10) - 3 \times V_{IN}}{I_{LOAD(max)}}$$

where

$$I_{RIPPLE(P-P)} = \frac{1.15 \times I_{LOAD(max)}}{1 - D_{(max)}} \tag{12}$$

Select a capacitor with ESR, at 52 kHz, that is less than or equal to the lower value calculated. Most electrolytic capacitors specify ESR at 120 Hz which is 15% to 30% higher than at 52 kHz. Also, be aware that ESR increases by a factor of 2 when operating at −20°C.

In general, low values of ESR are achieved by using large value capacitors (C ≥ 470 µF), and capacitors with high WVDC, or by paralleling smaller-value capacitors.

3. Output Voltage Selection (R1 and R2)

This section is for applications using the LM1577-ADJ/LM2577-ADJ. Skip this section if the LM1577-12/LM2577-12 or LM1577-15/LM2577-15 is being used.

With the LM1577-ADJ/LM2577-ADJ, the output voltage is given by

$$V_{OUT} = 1.23V\ (1 + R1/R2) \tag{13}$$

Resistors R1 and R2 divide the output down so it can be compared with the LM1577-ADJ/LM2577-ADJ internal 1.23V reference. For a given desired output voltage V_{OUT}, select R1 and R2 so that

$$\frac{R1}{R2} = \frac{V_{OUT}}{1.23V} - 1 \tag{14}$$

4. Input Capacitor Selection (C_{IN})

The switching action in the step-up regulator causes a triangular ripple current to be drawn from the supply source. This in turn causes noise to appear on the supply voltage. For proper operation of the LM1577, the input voltage should be decoupled. Bypassing the Input Voltage pin directly to ground with a good quality, low ESR, 0.1 µF capacitor (leads as short as possible) is normally sufficient.

Copyright © 1999–2013, Texas Instruments Incorporated

Table 3. Aluminum Electrolytic Capacitors Recommended for Switching Regulators

Cornell Dublier —Types 239, 250, 251, UFT, 300, or 350	
	P.O. Box 128, Pickens, SC 29671 (803) 878-6311
Nichicon —Types PF, PX, or PZ	
	927 East Parkway, Schaumburg, IL 60173 (708) 843-7500
Sprague —Types 672D, 673D, or 674D	
	Box 1, Sprague Road, Lansing, NC 28643 (919) 384-2551
United Chemi-Con —Types LX, SXF, or SXJ	
	9801 West Higgins Road, Rosemont, IL 60018 (708) 696-2000

If the LM1577 is located far from the supply source filter capacitors, an additional large electrolytic capacitor (e.g. 47 µF) is often required.

5. Diode Selection (D)

The switching diode used in the boost regulator must withstand a reverse voltage equal to the circuit output voltage, and must conduct the peak output current of the LM2577. A suitable diode must have a minimum reverse breakdown voltage greater than the circuit output voltage, and should be rated for average and peak current greater than $I_{LOAD(max)}$ and $I_{D(PK)}$. Schottky barrier diodes are often favored for use in switching regulators. Their low forward voltage drop allows higher regulator efficiency than if a (less expensive) fast recovery diode was used. See Table 4 for recommended part numbers and voltage ratings of 1A and 3A diodes.

Table 4. Diode Selection Chart

V_{OUT}	Schottky		Fast Recovery	
(max)	1A	3A	1A	3A
20V	1N5817	1N5820		
	MBR120P	MBR320P		
	1N5818	1N5821		
30V	MBR130P	MBR330P		
	11DQ03	31DQ03		
	1N5819	1N5822		
40V	MBR140P	MBR340P		
	11DQ04	31DQ04		
	MBR150	MBR350	1N4933	
50V	11DQ05	31DQ05	MUR105	
			1N4934	MR851
100V			HER102	30DL1
			MUR110	MR831
			10DL1	HER302

BOOST REGULATOR CIRCUIT EXAMPLE

By adding a few external components (as shown in Figure 37), the LM2577 can be used to produce a regulated output voltage that is greater than the applied input voltage. Typical performance of this regulator is shown in Figure 38 and Figure 39. The switching waveforms observed during the operation of this circuit are shown in Figure 40.

Copyright © 1999–2013, Texas Instruments Incorporated

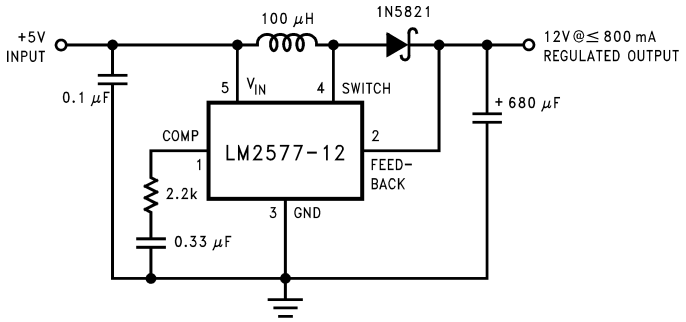

Note: Pin numbers shown are for TO-220 (T) package.

Figure 37. Step-up Regulator Delivers 12V from a 5V Input

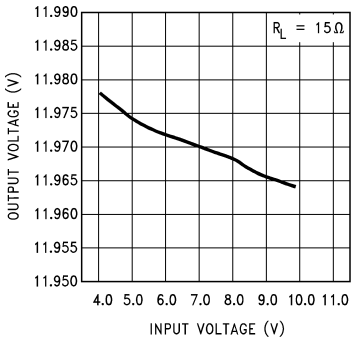

Figure 38. Line Regulation (Typical) of Step-Up Regulator of Figure 37

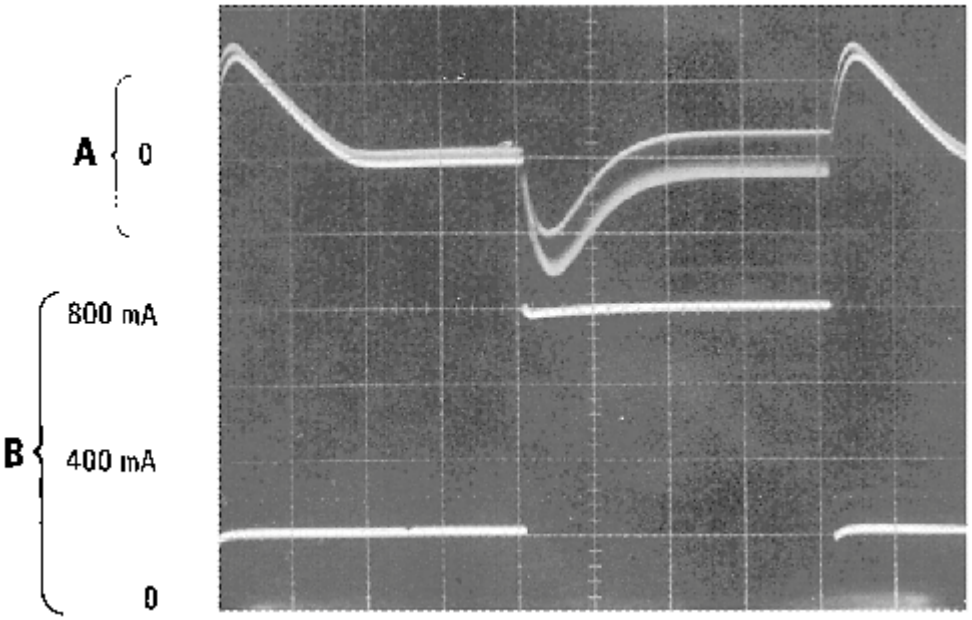

A: Output Voltage Change, 100 mV/div. (AC-coupled)
B: Load current, 0.2 A/div
Horizontal: 5 ms/div

Figure 39. Load Transient Response of Step-Up Regulator of Figure 37

Copyright © 1999–2013, Texas Instruments Incorporated

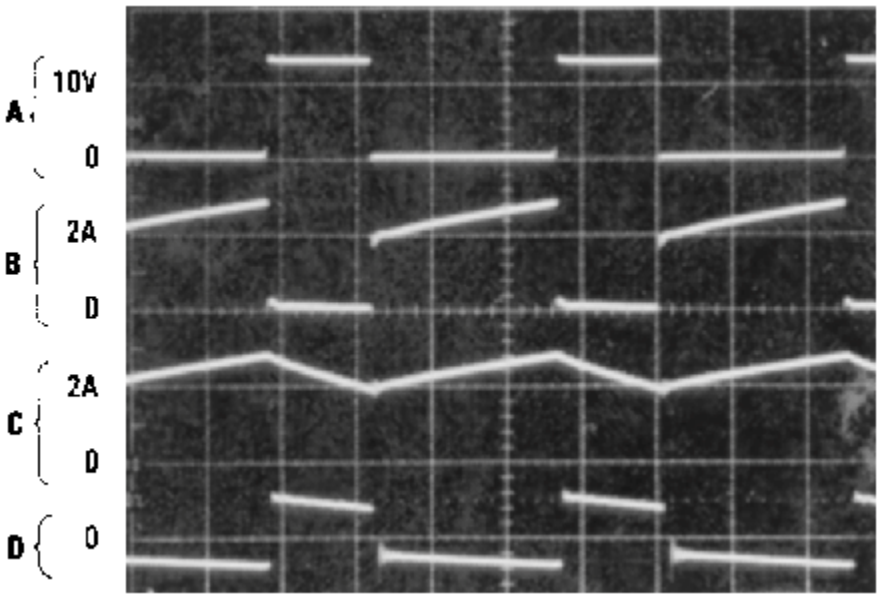

A: Switch pin voltage, 10 V/div
B: Switch pin current, 2 A/div
C: Inductor current, 2 A/div
D: Output ripple voltage, 100 mV/div (AC-coupled)
Horizontal: 5 μs/div

Figure 40. Switching Waveforms of Step-Up Regulator of Figure 37

FLYBACK REGULATOR

A Flyback regulator can produce single or multiple output voltages that are lower or greater than the input supply voltage. Figure 42 shows the LM1577/LM2577 used as a flyback regulator with positive and negative regulated outputs. Its operation is similar to a step-up regulator, except the output switch contols the primary current of a flyback transformer. Note that the primary and secondary windings are out of phase, so no current flows through secondary when current flows through the primary. This allows the primary to charge up the transformer core when the switch is on. When the switch turns off, the core discharges by sending current through the secondary, and this produces voltage at the outputs. The output voltages are controlled by adjusting the peak primary current, as described in the STEP-UP (BOOST) REGULATOR section.

Voltage and current waveforms for this circuit are shown in Figure 41, and formulas for calculating them are given in Table 5.

FLYBACK REGULATOR DESIGN PROCEDURE

1. Transformer Selection

A family of standardized flyback transformers is available for creating flyback regulators that produce dual output voltages, from ±10V to ±15V, as shown in Figure 42. Table 6 lists these transformers with the input voltage, output voltages and maximum load current they are designed for.

2. Compensation Network (C_C, R_C) and Output Capacitor (C_{OUT}) Selection

As explained in the Step-Up Regulator Design Procedure, C_C, R_C and C_{OUT} must be selected as a group. The following procedure is for a dual output flyback regulator with equal turns ratios for each secondary (i.e., both output voltages have the same magnitude). The equations can be used for a single output regulator by changing $\sum I_{LOAD(max)}$ to $I_{LOAD(max)}$ in the following equations.

A. **First, calculate the maximum value for R_C.**

$$R_C \le \frac{750 \times \Sigma I_{LOAD(max)} \times (15V + V_{IN(min)}N)^2}{V_{IN(min)}^2} \quad (15)$$

Where $\sum I_{LOAD(max)}$ is the sum of the load current (magnitude) required from both outputs. Select a resistor less than or equal to this value, and no greater than 3 kΩ.

B. **Calculate the minimum value for $\sum C_{OUT}$** (sum of C_{OUT} at both outputs) using the following two equations.

$$C_{OUT} \ge \frac{0.19 \times R_C \times L_P \times \Sigma I_{LOAD(max)}}{15V \times V_{IN(min)}}$$

and

$$C_{OUT} \ge \frac{V_{IN(min)} \times R_C \times N^2 \times (V_{IN(min)} + (3.74 \times 10^5 \times L_P))}{487{,}800 \times (15V)^2 \times (15V + V_{IN(min)} \times N)} \quad (16)$$

The larger of these two values must be used to ensure regulator stability.

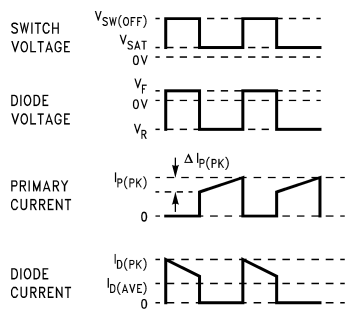

Figure 41. Flyback Regulator Waveforms

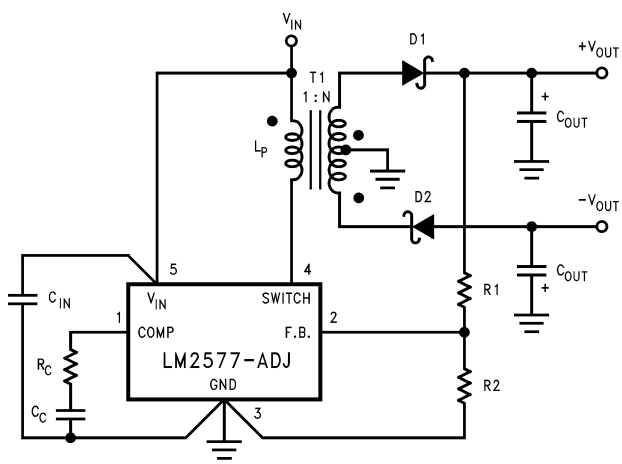

T1 = Pulse Engineering, PE-65300
D1, D2 = 1N5821

Figure 42. LM1577-ADJ/LM2577-ADJ Flyback Regulator with ± Outputs

Table 5. Flyback Regulator Formulas

Duty Cycle	D	$\frac{V_{OUT} + V_F}{N(V_{IN} - V_{SAT}) + V_{OUT} + V_F} \approx \frac{V_{OUT}}{N(V_{IN}) + V_{OUT}}$ (17)
Primary Current Variation	ΔI_P	$\frac{D(V_{IN} - V_{SAT})}{L_P \times 52{,}000}$ (18)

Copyright © 1999–2013, Texas Instruments Incorporated

Table 5. Flyback Regulator Formulas (continued)

Peak Primary Current	$I_{P(PK)}$	$\frac{N}{\eta} \times \frac{\Sigma I_{LOAD}}{1 - D} + \frac{\Delta I_{PK}}{2}$ (19)
Switch Voltage when Off	$V_{SW(OFF)}$	$V_{IN} + \frac{V_{OUT} + V_F}{N}$ (20)
Diode Reverse Voltage	V_R	$V_{OUT}^{+} N (V_{IN}^{-} V_{SAT})$
Average Diode Current	$I_{D(AVE)}$	I_{LOAD}
Peak Diode Current	$I_{D(PK)}$	$\frac{I_{LOAD}}{1 - D} + \frac{\Delta I_{IND}}{2}$ (21)
Short Circuit Diode Current		$\approx \frac{6A}{N}$ (22)
Power Dissipation of LM1577/LM2577	P_D	$0.25\Omega \left(\frac{N \Sigma I_{LOAD}}{1 - D}\right)^2 + \frac{N I_{LOAD} D}{50 (1 - D)} V_{IN}$ (23)

$$N = \text{Transformer Turns Ratio} = \frac{\text{number of secondary turns}}{\text{number of primary turns}}$$

η = Transformer Efficiency *(typically 0.95)*

$\Sigma I_{LOAD} = |+I_{LOAD}| + |-I_{LOAD}|$

C. *Calculate the minimum value of* C_C

$$C_C \geq \frac{58.5 \times C_{OUT} \times V_{OUT} \times (V_{OUT} + (V_{IN(min)} \times N))}{R_C^2 \times V_{IN(min)} \times N} \quad (24)$$

D. *Calculate the maximum ESR* of the $+V_{OUT}$ and $-V_{OUT}$ output capacitors in parallel.

$$ESR_+ \| ESR_- \leq \frac{8.7 \times 10^{-3} \times V_{IN(min)} \times V_{OUT} \times N}{\Sigma I_{LOAD(max)} \times (V_{OUT}^{+} (V_{IN(min)} \times N))} \quad (25)$$

This formula can also be used to calculate the maximum ESR of a single output regulator.

At this point, refer to this same section in the STEP-UP REGULATOR DESIGN PROCEDURE section for more information regarding the selection of C_{OUT}.

3. Output Voltage Selection

This section is for applications using the LM1577-ADJ/LM2577-ADJ. Skip this section if the LM1577-12/LM2577-12 or LM1577-15/LM2577-15 is being used.

With the LM1577-ADJ/LM2577-ADJ, the output voltage is given by

$$V_{OUT} = 1.23V (1 + R1/R2) \quad (26)$$

Resistors R1 and R2 divide the output voltage down so it can be compared with the LM1577-ADJ/LM2577-ADJ internal 1.23V reference. For a desired output voltage V_{OUT}, select R1 and R2 so that

$$\frac{R1}{R2} = \frac{V_{OUT}}{1.23V} - 1 \quad (27)$$

4. Diode Selection

The switching diode in a flyback converter must withstand the reverse voltage specified by the following equation.

$$V_R = V_{OUT} + \frac{V_{IN}}{N} \quad (28)$$

A suitable diode must have a reverse voltage rating greater than this. In addition it must be rated for more than the average and peak diode currents listed in Table 5.

5. Input Capacitor Selection

The primary of a flyback transformer draws discontinuous pulses of current from the input supply. As a result, a flyback regulator generates more noise at the input supply than a step-up regulator, and this requires a larger bypass capacitor to decouple the LM1577/LM2577 V_{IN} pin from this noise. For most applications, a low ESR, 1.0 µF cap will be sufficient, if it is connected very close to the V_{IN} and Ground pins.

Transformer Type		Input Voltage	Dual Output Voltage	Maximum Output Current
	L_P = 100 µH	5V	±10V	325 mA
1	N = 1	5V	±12V	275 mA
		5V	±15V	225 mA
		10V	±10V	700 mA
		10V	±12V	575 mA
2	L_P = 200 µH	10V	±15V	500 mA
	N = 0.5	12V	±10V	800 mA
		12V	±12V	700 mA
		12V	±15V	575 mA
3	L_P = 250 µH	15V	±10V	900 mA
	N = 0.5	15V	±12V	825 mA
		15V	±15V	700 mA

Table 6. Flyback Transformer Selection Guide

Transformer	Manufacturers' Part Numbers		
Type	AIE	Pulse	Renco
1	326-0637	PE-65300	RL-2580
2	330-0202	PE-65301	RL-2581
3	330-0203	PE-65302	RL-2582

In addition to this bypass cap, a larger capacitor (≥ 47 µF) should be used where the flyback transformer connects to the input supply. This will attenuate noise which may interfere with other circuits connected to the same input supply voltage.

6. Snubber Circuit

A “snubber” circuit is required when operating from input voltages greater than 10V, or when using a transformer with L_P ≥ 200 µH. This circuit clamps a voltage spike from the transformer primary that occurs immediately after the output switch turns off. Without it, the switch voltage may exceed the 65V maximum rating. As shown in Figure 43, the snubber consists of a fast recovery diode, and a parallel RC. The RC values are selected for switch clamp voltage (V_{CLAMP}) that is 5V to 10V greater than $V_{SW(OFF)}$. Use the following equations to calculate R and C;

$$C \geq \frac{0.02 \times L_P \times I_{P(PK)}^2}{(V_{CLAMP})^2 - (VSW_{(OFF)})^2}$$

$$R \leq \left(\frac{V_{CLAMP} + V_{SW(OFF)} - V_{IN}}{2}\right)^2 \times \left(\frac{19.2 \times 10^{-4}}{L_P \times I_{P(PK)}^2}\right) \tag{29}$$

Power dissipation (and power rating) of the resistor is;

$$P = \left(\frac{V_{CLAMP} + V_{SW(OFF)} - V_{IN}}{2}\right)^2 / R \tag{30}$$

The fast recovery diode must have a reverse voltage rating greater than V_{CLAMP}.

Copyright © 1999–2013, Texas Instruments Incorporated

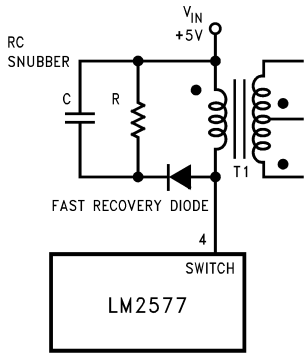

Figure 43. Snubber Circuit

FLYBACK REGULATOR CIRCUIT EXAMPLE

The circuit of Figure 44 produces ±15V (at 225 mA each) from a single 5V input. The output regulation of this circuit is shown in Figure 45 and Figure 47, while the load transient response is shown in Figure 46 and Figure 48. Switching waveforms seen in this circuit are shown in Figure 49.

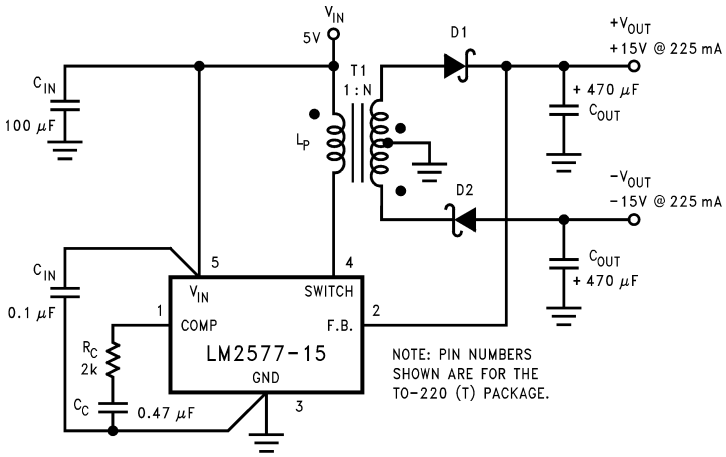

T1 = Pulse Engineering, PE-65300
D1, D2 = 1N5821

Figure 44. Flyback Regulator Easily Provides Dual Outputs

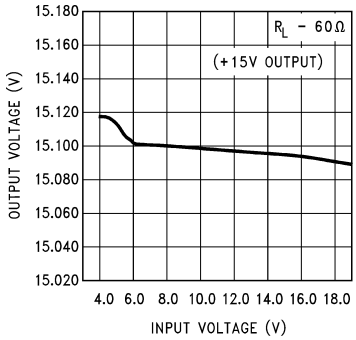

Figure 45. Line Regulation (Typical) of Flyback Regulator of Figure 44, +15V Output

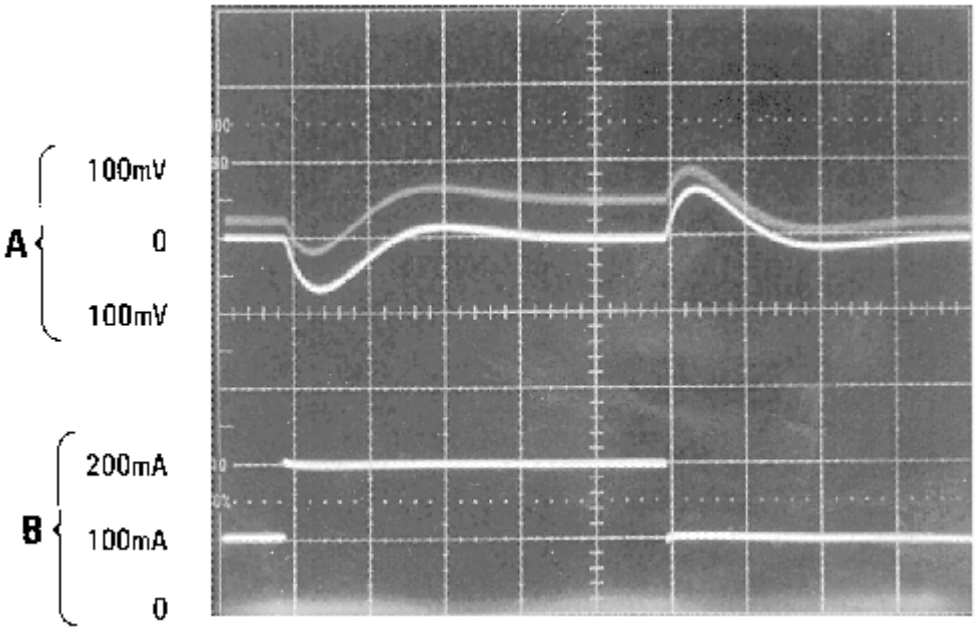

A: Output Voltage Change, 100 mV/div
B: Output Current, 100 mA/div
Horizontal: 10 ms/div

Figure 46. Load Transient Response of Flyback Regulator of Figure 44, +15V Output

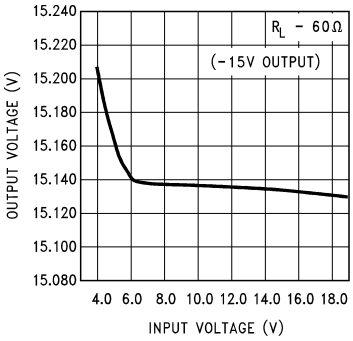

Figure 47. Line Regulation (Typical) of Flyback Regulator of Figure 44, −15V Output

Copyright © 1999–2013, Texas Instruments Incorporated

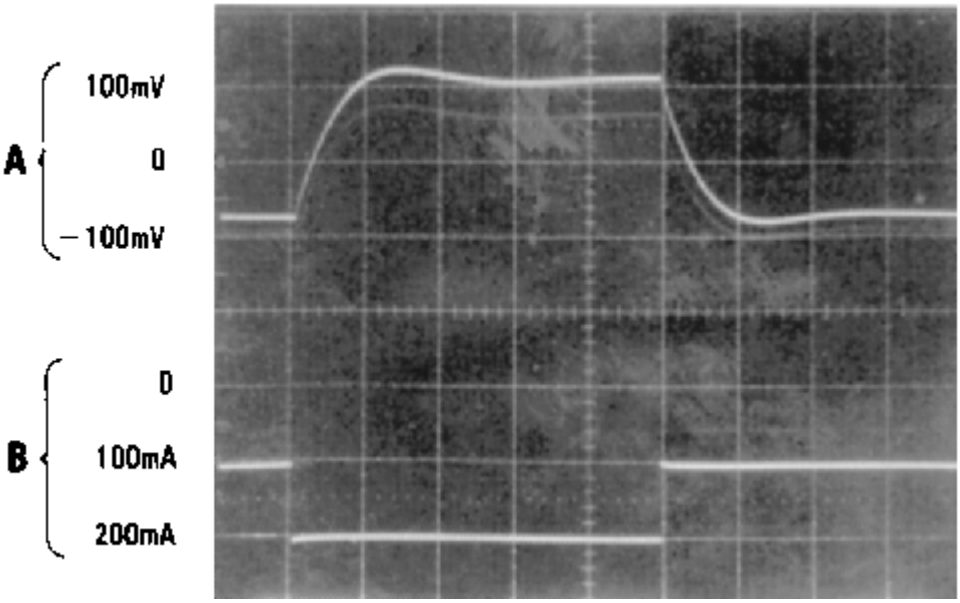

A: Output Voltage Change, 100 mV/div
B: Output Current, 100 mA/div
Horizontal: 10 ms/div

Figure 48. Load Transient Response of Flyback Regulator of Figure 44, −15V Output

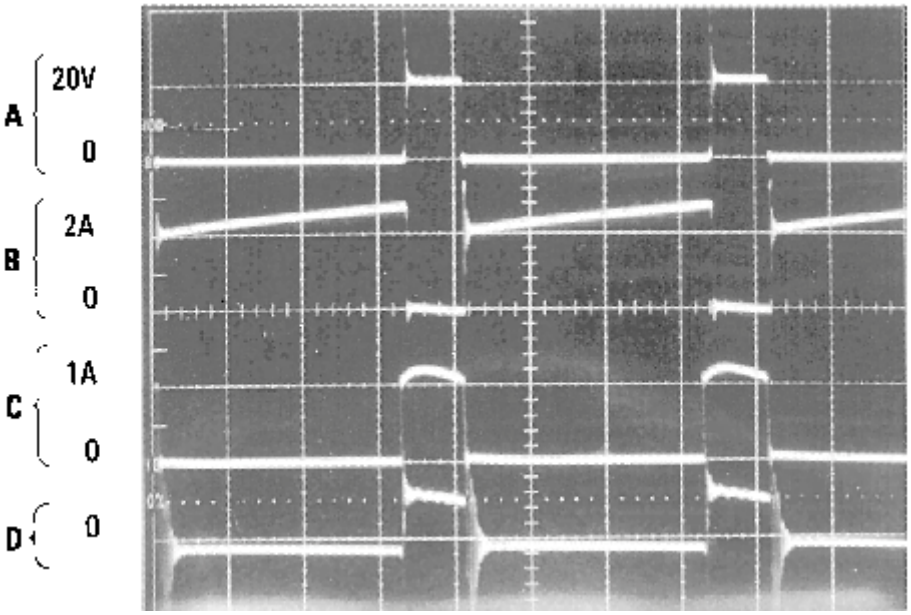

A: Switch pin voltage, 20 V/div
B: Primary current, 2 A/div
C: +15V Secondary current, 1 A/div
D: +15V Output ripple voltage, 100 mV/div
Horizontal: 5 µs/div

Figure 49. Switching Waveforms of Flyback Regulator of Figure 44, Each Output Loaded with 60Ω

REVISION HISTORY

Changes from Revision C (April 2013) to Revision D	Page
• Changed layout of National Data Sheet to TI format	29

Copyright © 1999–2013, Texas Instruments Incorporated

PACKAGING INFORMATION

Orderable Device	Status (1)	Package Type	Package Drawing	Pins	Package Qty	Eco Plan (2)	Lead finish/ Ball material (6)	MSL Peak Temp (3)	Op Temp (°C)	Device Marking (4/5)	Samples
LM2577S-ADJ	NRND	DDPAK/ TO-263	KTT	5	45	Non-RoHS & Green	Call TI	Level-3-235C-168 HR	-40 to 125	LM2577S -ADJ P+	
LM2577S-ADJ/NOPB	ACTIVE	DDPAK/ TO-263	KTT	5	45	RoHS-Exempt & Green	SN	Level-3-245C-168 HR	-40 to 125	LM2577S -ADJ P+	Samples
LM2577SX-ADJ/NOPB	ACTIVE	DDPAK/ TO-263	KTT	5	500	RoHS-Exempt & Green	SN	Level-3-245C-168 HR	-40 to 125	LM2577S -ADJ P+	Samples
LM2577T-ADJ	NRND	TO-220	KC	5	45	Non-RoHS & Green	Call TI	Level-1-NA-UNLIM	-40 to 125	LM2577T -ADJ P+	
LM2577T-ADJ/LB03	NRND	TO-220	NDH	5	45	Non-RoHS & Green	Call TI	Level-1-NA-UNLIM		LM2577T -ADJ P+	
LM2577T-ADJ/LF03	ACTIVE	TO-220	NDH	5	45	RoHS & Green	SN	Level-1-NA-UNLIM		LM2577T -ADJ P+	Samples
LM2577T-ADJ/NOPB	ACTIVE	TO-220	KC	5	45	RoHS-Exempt & Green	SN	Level-1-NA-UNLIM	-40 to 125	LM2577T -ADJ P+	Samples

(1) The marketing status values are defined as follows:
ACTIVE: Product device recommended for new designs.
LIFEBUY: TI has announced that the device will be discontinued, and a lifetime-buy period is in effect.
NRND: Not recommended for new designs. Device is in production to support existing customers, but TI does not recommend using this part in a new design.
PREVIEW: Device has been announced but is not in production. Samples may or may not be available.
OBSOLETE: TI has discontinued the production of the device.

(2) **RoHS:** TI defines "RoHS" to mean semiconductor products that are compliant with the current EU RoHS requirements for all 10 RoHS substances, including the requirement that RoHS substance do not exceed 0.1% by weight in homogeneous materials. Where designed to be soldered at high temperatures, "RoHS" products are suitable for use in specified lead-free processes. TI may reference these types of products as "Pb-Free".
RoHS Exempt: TI defines "RoHS Exempt" to mean products that contain lead but are compliant with EU RoHS pursuant to a specific EU RoHS exemption.
Green: TI defines "Green" to mean the content of Chlorine (Cl) and Bromine (Br) based flame retardants meet JS709B low halogen requirements of <=1000ppm threshold. Antimony trioxide based flame retardants must also meet the <=1000ppm threshold requirement.

(3) MSL, Peak Temp. - The Moisture Sensitivity Level rating according to the JEDEC industry standard classifications, and peak solder temperature.

(4) There may be additional marking, which relates to the logo, the lot trace code information, or the environmental category on the device.

(5) Multiple Device Markings will be inside parentheses. Only one Device Marking contained in parentheses and separated by a "~" will appear on a device. If a line is indented then it is a continuation of the previous line and the two combined represent the entire Device Marking for that device.

(6) Lead finish/Ball material - Orderable Devices may have multiple material finish options. Finish options are separated by a vertical ruled line. Lead finish/Ball material values may wrap to two lines if the finish value exceeds the maximum column width.

Important Information and Disclaimer: The information provided on this page represents TI's knowledge and belief as of the date that it is provided. TI bases its knowledge and belief on information provided by third parties, and makes no representation or warranty as to the accuracy of such information. Efforts are underway to better integrate information from third parties. TI has taken and continues to take reasonable steps to provide representative and accurate information but may not have conducted destructive testing or chemical analysis on incoming materials and chemicals. TI and TI suppliers consider certain information to be proprietary, and thus CAS numbers and other limited information may not be available for release.

In no event shall TI's liability arising out of such information exceed the total purchase price of the TI part(s) at issue in this document sold by TI to Customer on an annual basis.

TAPE AND REEL INFORMATION

REEL DIMENSIONS

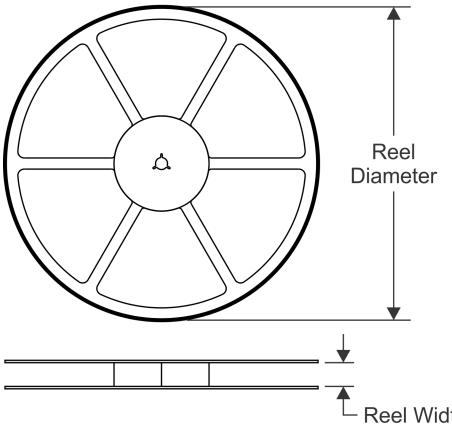

TAPE DIMENSIONS

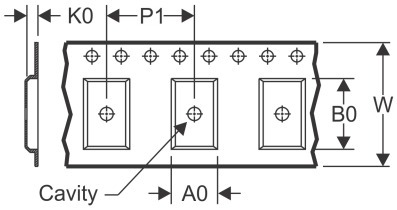

A0	Dimension designed to accommodate the component width
B0	Dimension designed to accommodate the component length
K0	Dimension designed to accommodate the component thickness
W	Overall width of the carrier tape
P1	Pitch between successive cavity centers

QUADRANT ASSIGNMENTS FOR PIN 1 ORIENTATION IN TAPE

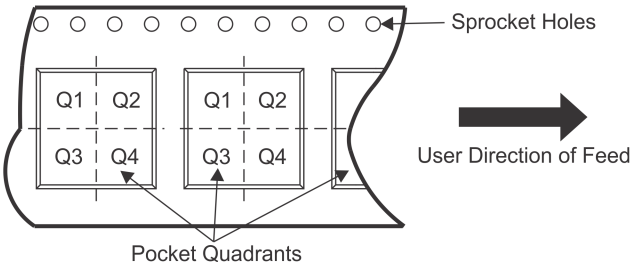

*All dimensions are nominal

Device	Package Type	Package Drawing	Pins	SPQ	Reel Diameter (mm)	Reel Width W1 (mm)	A0 (mm)	B0 (mm)	K0 (mm)	P1 (mm)	W (mm)	Pin1 Quadrant
LM2577SX-ADJ/NOPB	DDPAK/ TO-263	KTT	5	500	330.0	24.4	10.75	14.85	5.0	16.0	24.0	Q2

TAPE AND REEL BOX DIMENSIONS

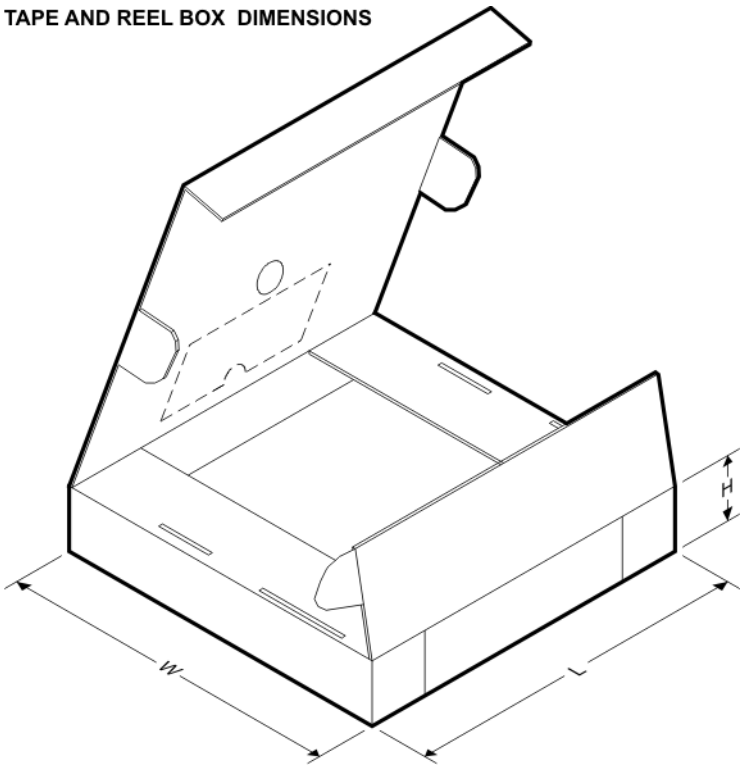

*All dimensions are nominal

Device	Package Type	Package Drawing	Pins	SPQ	Length (mm)	Width (mm)	Height (mm)
LM2577SX-ADJ/NOPB	DDPAK/TO-263	KTT	5	500	367.0	367.0	45.0

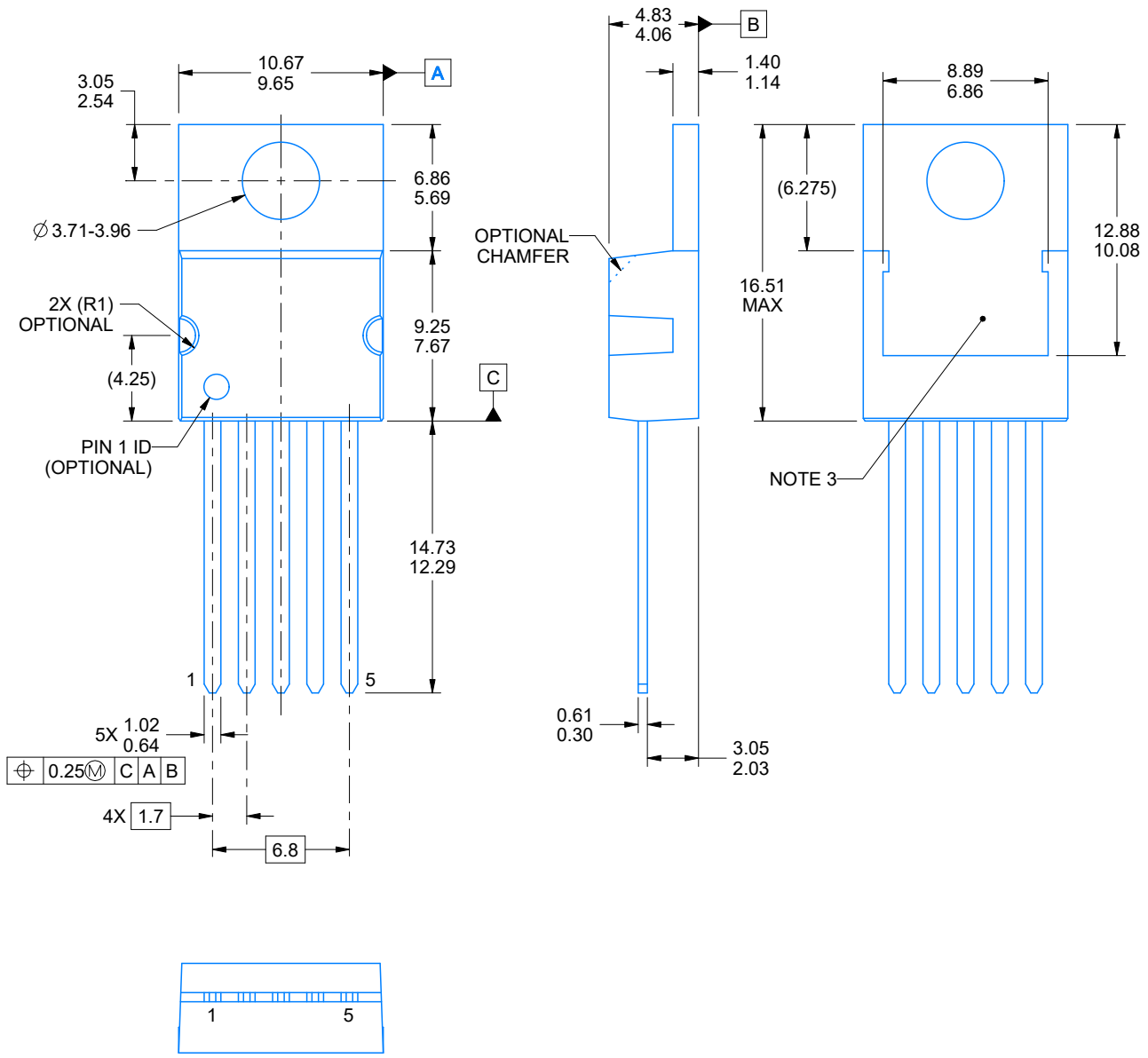

4215009/A 01/2017

NOTES:

1. All controlling linear dimensions are in inches. Dimensions in brackets are in millimeters. Any dimension in brackets or parenthesis are for reference only. Dimensioning and tolerancing per ASME Y14.5M.
2. This drawing is subject to change without notice.
3. Shape may vary per different assembly sites.

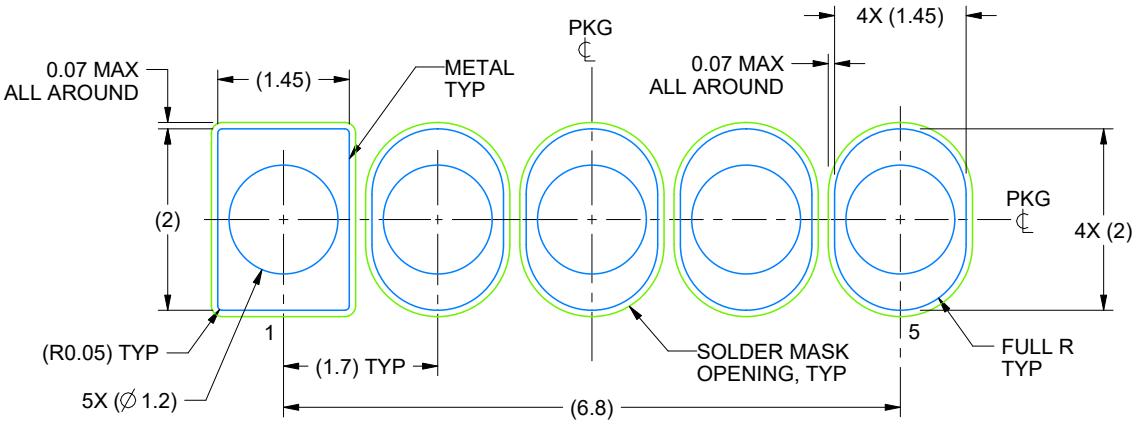

LAND PATTERN
NON-SOLDER MASK DEFINED
SCALE:12X

4215009/A 01/2017

NEB0005B

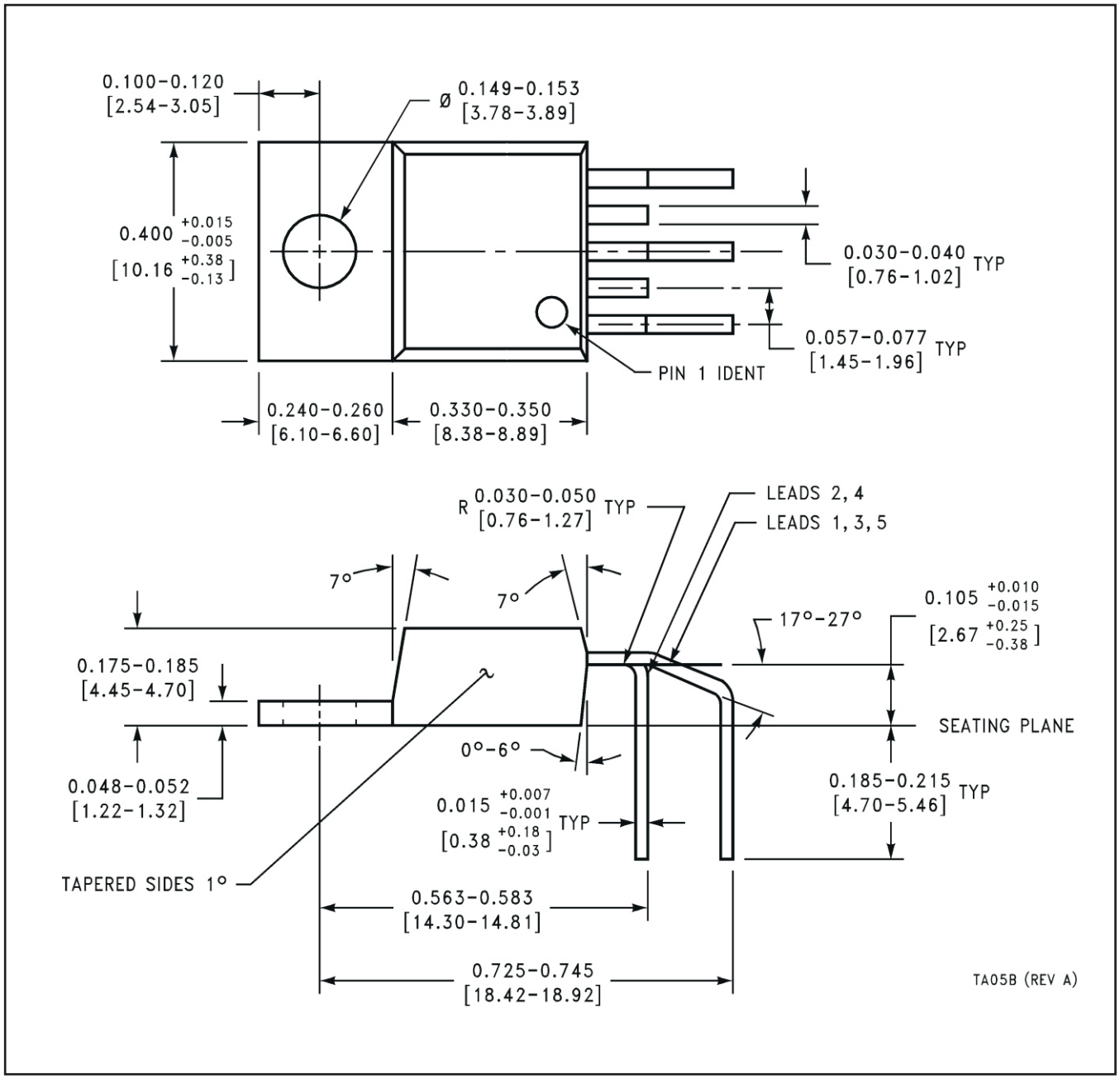
0.100-0.120
[2.54-3.05]
Ø 0.149-0.153
[3.78-3.89]
0.400 +0.015 -0.005
[10.16 +0.38 -0.13]
0.030-0.040 TYP
[0.76-1.02]
0.057-0.077 TYP
[1.45-1.96]
PIN 1 IDENT
0.240-0.260
[6.10-6.60]
0.330-0.350
[8.38-8.89]
R 0.030-0.050 TYP
[0.76-1.27]
LEADS 2, 4
LEADS 1, 3, 5
7°
7°
17°-27°
0.105 +0.010 -0.015
[2.67 +0.25 -0.38]
0.175-0.185
[4.45-4.70]
SEATING PLANE
0°-6°
0.048-0.052
[1.22-1.32]
0.185-0.215 TYP
[4.70-5.46]
0.015 +0.007 -0.001 TYP
[0.38 +0.18 -0.03]
TAPERED SIDES 1°
0.563-0.583
[14.30-14.81]
0.725-0.745
[18.42-18.92]
TA05B (REV A)

NDH0005D

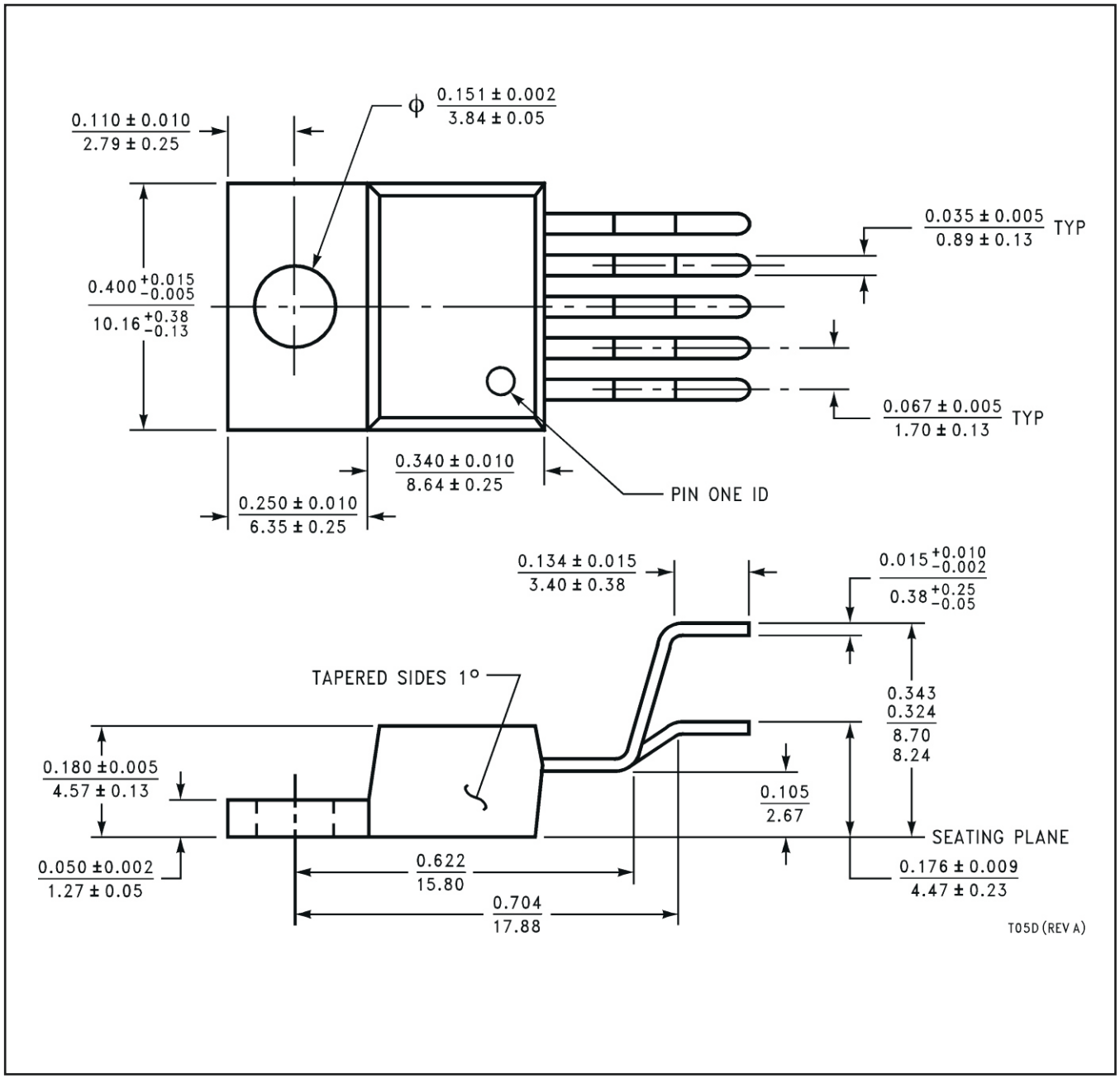
0.110 ± 0.010
2.79 ± 0.25
ϕ 0.151 ± 0.002
3.84 ± 0.05
0.035 ± 0.005
0.89 ± 0.13
TYP
0.400 +0.015 −0.005
10.16 +0.38 −0.13
0.067 ± 0.005
1.70 ± 0.13
TYP
0.340 ± 0.010
8.64 ± 0.25
PIN ONE ID
0.250 ± 0.010
6.35 ± 0.25
0.134 ± 0.015
3.40 ± 0.38
0.015 +0.010 −0.002
0.38 +0.25 −0.05
TAPERED SIDES 1°
0.343
0.324
8.70
8.24
0.180 ±0.005
4.57 ± 0.13
0.105
2.67
SEATING PLANE
0.050 ±0.002
1.27 ± 0.05
0.622
15.80
0.176 ± 0.009
4.47 ± 0.23
0.704
17.88
T05D (REV A)

KTT0005B

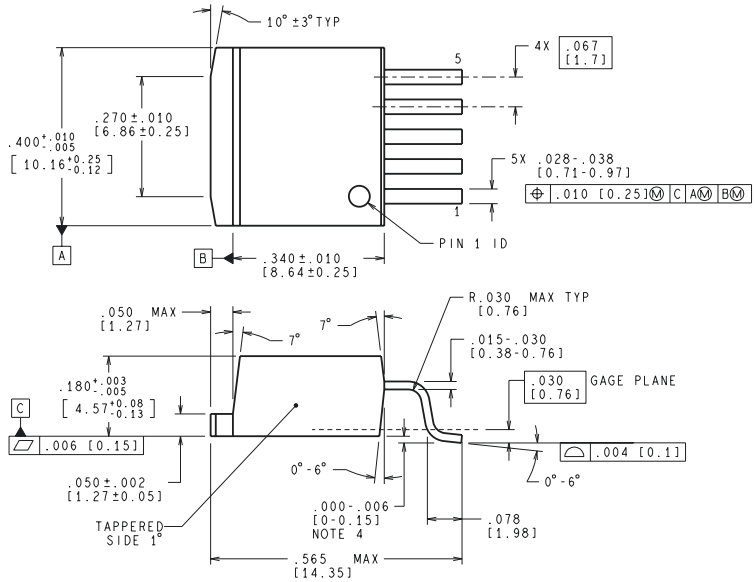

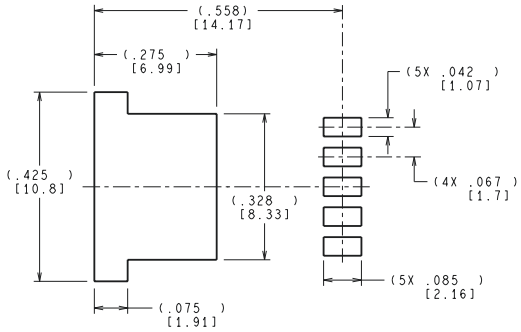

LAND PATTERN RECOMMENDATION

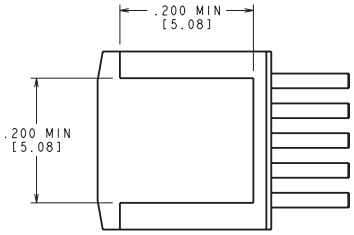

BOTTOM SIDE OF PACKAGE

CONTROLLING DIMENSION IS INCH
VALUES IN [ ] ARE MILLIMETERS
DIMENSIONS IN ( ) FOR REFERENCE ONLY

TS5B (Rev D)

IMPORTANT NOTICE AND DISCLAIMER

TI PROVIDES TECHNICAL AND RELIABILITY DATA (INCLUDING DATASHEETS), DESIGN RESOURCES (INCLUDING REFERENCE DESIGNS), APPLICATION OR OTHER DESIGN ADVICE, WEB TOOLS, SAFETY INFORMATION, AND OTHER RESOURCES “AS IS” AND WITH ALL FAULTS, AND DISCLAIMS ALL WARRANTIES, EXPRESS AND IMPLIED, INCLUDING WITHOUT LIMITATION ANY IMPLIED WARRANTIES OF MERCHANTABILITY, FITNESS FOR A PARTICULAR PURPOSE OR NON-INFRINGEMENT OF THIRD PARTY INTELLECTUAL PROPERTY RIGHTS.

These resources are intended for skilled developers designing with TI products. You are solely responsible for (1) selecting the appropriate TI products for your application, (2) designing, validating and testing your application, and (3) ensuring your application meets applicable standards, and any other safety, security, or other requirements. These resources are subject to change without notice. TI grants you permission to use these resources only for development of an application that uses the TI products described in the resource. Other reproduction and display of these resources is prohibited. No license is granted to any other TI intellectual property right or to any third party intellectual property right. TI disclaims responsibility for, and you will fully indemnify TI and its representatives against, any claims, damages, costs, losses, and liabilities arising out of your use of these resources.

TI’s products are provided subject to TI’s Terms of Sale (https:www.ti.com/legal/termsofsale.html) or other applicable terms available either on ti.com or provided in conjunction with such TI products. TI’s provision of these resources does not expand or otherwise alter TI’s applicable warranties or warranty disclaimers for TI products.

Mailing Address: Texas Instruments, Post Office Box 655303, Dallas, Texas 75265
Copyright © 2021, Texas Instruments Incorporated